Ezi-SERVO® II

Closed Loop Stepping System

- Intergrated Controller
- Ethernet Interface
- Position Table Function
- Closed Loop Stepping System
- No Gain Tuning / No Hunting
- Fast Response

Plus-E



CE

FASTECH
Fast, Accurate, Smooth Motion

Features

1. Network Based Motion Control

A maximum of 254 axes can be operated from a PC through Ethernet communications. And daisy-chain connection is available thru internally equipped Ethernet HUB. All of the Motion conditions are set through the network and saved in Flash ROM as a parameter. Motion Library(DLL) is provided for programming under Windows XP / 7 / 8 / 10.

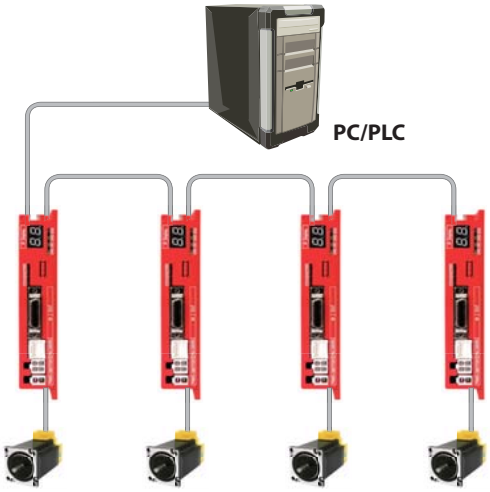

2. Position Table Function

Position Table can be used for motion control by digital input and output signals of host controller. You can operate the motor directly by sending the position table number, start / stop, origin search and other digital input values from a PC. The PC can monitor the In-Position, origin search, moving / stop, servo ready and other digital output signals from a drive. A maximum of 256 positioning points can be set from PC.

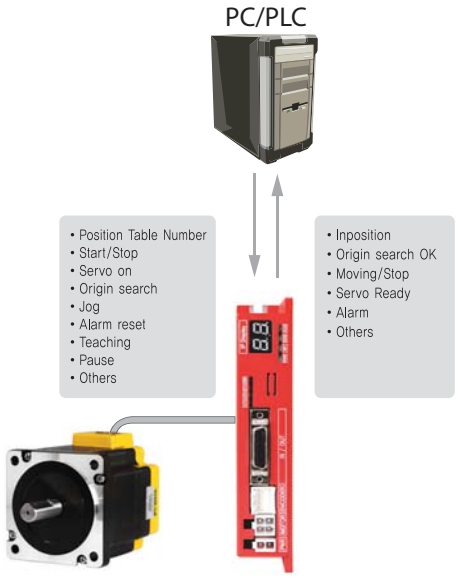

3. Closed Loop System

Ezi-SERVO II Plus-E is an innovative closed loop stepping motor and controller that utilizes a high-resolution motor mounted encoder to constantly monitor the motor shaft position. The encoder feedback feature allows the Ezi-SERVO II Plus-E to update the current motor shaft position information every 25 micro seconds. This allows the Ezi-SERVO II Plus-E drive to compensate for the loss of position, ensuring accurate positioning. For example, due to a sudden load change, a conventional stepper motor and drive could lose a step creating a positioning error and a great deal of cost to the end user!

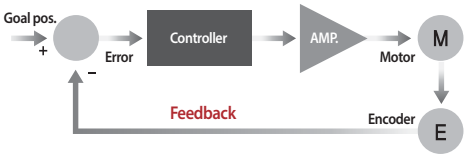

4. No Gain Tuning

Conventional servo systems, to ensure machine performance, smoothness, positional error and low servo noise, require the adjustment of its servo's gains as an initial crucial step. Even systems that employ autotuning require manual tweaking after the system is installed, especially if more that one axis are interdependent. Ezi-SERVO II Plus-E employs the best characteristics of stepper and closed loop motion controls and algorithms to eliminate the need of tedious gain tuning required for conventional closed loop servo systems. This means that Ezi-SERVO II Plus-E is optimized for the application and ready to work right out of the box! The Ezi-SERVO II Plus-E system employs the unique characteristics of the closed loop stepping motor control, eliminating these cumbersome steps and giving the engineer a high performance servo system without wasting setup time. Ezi-SERVO II Plus-E is especially well suited for low stiffness loads(For example, a belt and pulley system) that sometime require conventional servo systems to inertia match with the added expense and bulk of a gearbox. Ezi-SERVO II Plus-E also performs exceptionally, even under heavy loads and high speeds!

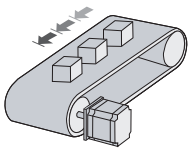

5. High Resolution

The unit of the position command can be divided precisely.
(Max. 20,000[ppr])

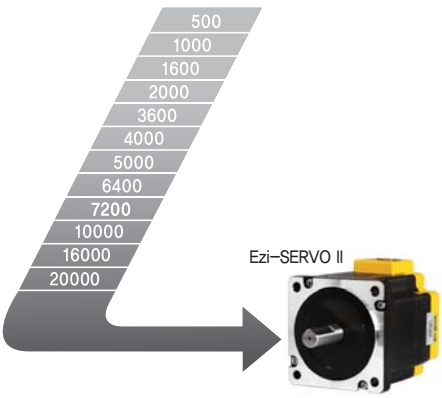

6. No Hunting

Traditional servo motor drives overshoot their position and try to correct by overshooting the opposite direction, especially in high gain applications. This is called null hunt and is especially prevalent in systems that the break away or static friction is significantly higher than the running friction.
The cure is lowering the gain, which affects accuracy or using Ezi-SERVO II Plus-E Motion Control System! Ezi-SERVO II Plus-E utilizes the unique characteristics of stepping motors and locks itself into the desired target position, eliminating Null Hunt. This feature is especially useful in applications such as nanotech manufacturing, semiconductor fabrication, vision systems and ink jet printing in which system oscillation and vibration could be a problem.

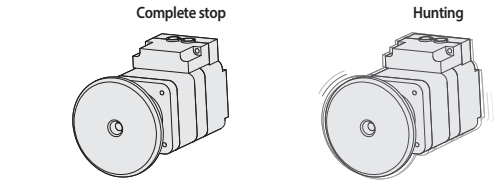

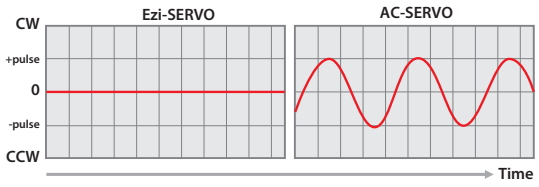

7. Fast Response

Similar to conventional stepping motors, Ezi-SERVO II Plus-E instantly synchronizes with command pulses providing fast positional response. Ezi-Ezi-SERVO II Plus-E is the optimum choice when zero-speed stability and rapid motions within a short distance are required. Traditional servo motor systems have a natural delay between the commanding input signals and the resultant motion because of the constant monitoring of the current position, necessitating in a waiting time until it settles, called settling time.

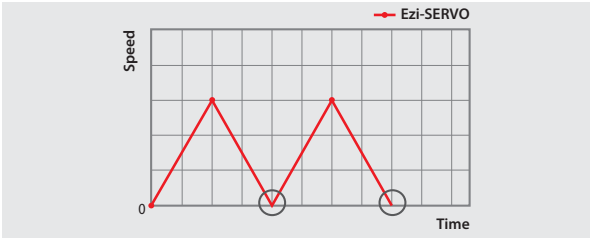

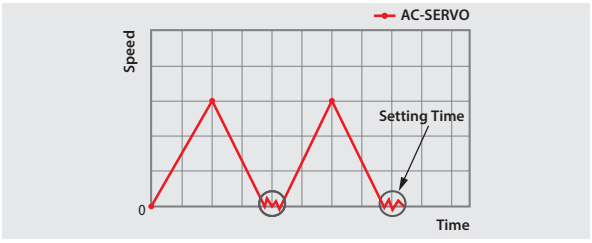

8. Smootah and Accurate

Ezi-SERVO II Plus-E is a high-precision servo drive, using a high-resolution encoder with 20,000[ppr].
Unlike a conventional Microstep drive, the on-board high performance DSP(Digital Signal Processor) performs vector control and filtering, producing a smooth rotational control with minimum ripples.

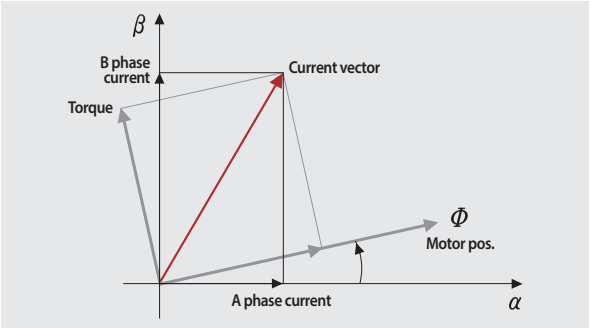

9. High Torque

Compared with common step motors and drives, Ezi-SERVO II Plus-E motion control systems can maintain a high torque state over relatively long period of time. This means that Ezi-SERVO II continuously operates without loss of position under 100% of the load. Unlike conventional Microstep drives, Ezi-SERVO II Plus-E exploits continuous high-torque operation during high-speed motion due to its innovative optimum current phase control.

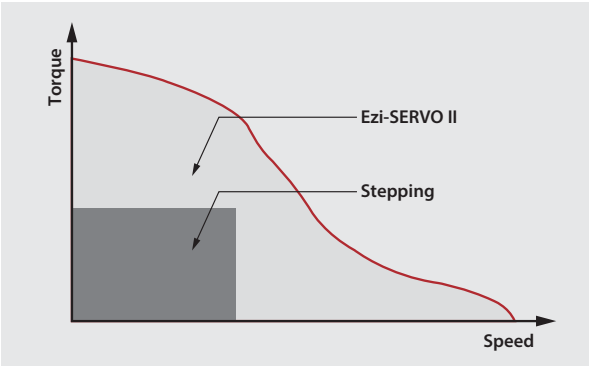

10. High Speed

The Ezi-SERVO II Plus-E functions well at high speed without the loss of Synchronism or positioning error. Ezi-SERVO II Plus-E's ability of continuous monitoring of current position enables the stepping motor to generate high-torque, even under a 100% load condition.

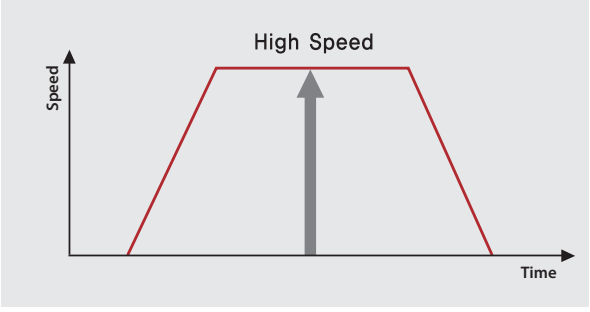

Part Numbering Method

Ezi-SERVO II-PE-42S-A-BK-PN10-□

Ezi-SERVO II	**Product Name**

PE : Plus Ethernet	**Drive Series Type**

20mm	**Motor Flange Size**
28mm	
35mm	
42mm	
56mm	
60mm	

S : Single	**Motor Length**
M : Middle	
L : Large	
XL : Extra Large	

User Code	

Reduction Gear Ratio	No Indication : No
	PN03 - 1:3
	PN05 - 1:5
	PN08 - 1:8
	PN10 - 1:10
	PN15 - 1:15
	PN25 - 1:25
	PN40 - 1:40
	PN50 - 1:50

Brake	No Indication : No
	BK-Brake

Encoder Resolution	A - 10,000[ppr]
	B - 20,000[ppr]
	D - 16,000[ppr]
	F - 4,000[ppr]

Motor, Drive Combination

UNIT No.	MOTOR No.	DRIVE No.
Ezi-SERVO II-PE-20M-F	EzM2-20M-F	EzS2-PE-20M-F
Ezi-SERVO II-PE-20L-F	EzM2-20L-F	EzS2-PE-20L-F
Ezi-SERVO II-PE-28S-D	EzM2-28S-D	EzS2-PE-28S-D
Ezi-SERVO II-PE-28M-D	EzM2-28M-D	EzS2-PE-28M-D
Ezi-SERVO II-PE-28L-D	EzM2-28L-D	EzS2-PE-28L-D
Ezi-SERVO II-PE-35M-D	EzM2-35M-D	EzS2-PE-35M-D
Ezi-SERVO II-PE-35L-D	EzM2-35L-D	EzS2-PE-35L-D
Ezi-SERVO II-PE-42S-A	EzM2-42S-A	EzS2-PE-42S-A
Ezi-SERVO II-PE-42S-B	EzM2-42S-B	EzS2-PE-42S-B
Ezi-SERVO II-PE-42M-A	EzM2-42M-A	EzS2-PE-42M-A
Ezi-SERVO II-PE-42M-B	EzM2-42M-B	EzS2-PE-42M-B
Ezi-SERVO II-PE-42L-A	EzM2-42L-A	EzS2-PE-42L-A
Ezi-SERVO II-PE-42L-B	EzM2-42L-B	EzS2-PE-42L-B
Ezi-SERVO II-PE-42XL-A	EzM2-42XL-A	EzS2-PE-42XL-A
Ezi-SERVO II-PE-42XL-B	EzM2-42XL-B	EzS2-PE-42XL-B
Ezi-SERVO II-PE-56S-A	EzM2-56S-A	EzS2-PE-56S-A
Ezi-SERVO II-PE-56S-B	EzM2-56S-B	EzS2-PE-56S-B
Ezi-SERVO II-PE-56M-A	EzM2-56M-A	EzS2-PE-56M-A
Ezi-SERVO II-PE-56M-B	EzM2-56M-B	EzS2-PE-56M-B
Ezi-SERVO II-PE-56L-A	EzM2-56L-A	EzS2-PE-56L-A
Ezi-SERVO II-PE-56L-B	EzM2-56L-B	EzS2-PE-56L-B
Ezi-SERVO II-PE-60S-A	EzM2-60S-A	EzS2-PE-60S-A
Ezi-SERVO II-PE-60S-B	EzM2-60S-B	EzS2-PE-60S-B
Ezi-SERVO II-PE-60M-A	EzM2-60M-A	EzS2-PE-60M-A
Ezi-SERVO II-PE-60M-B	EzM2-60M-B	EzS2-PE-60M-B
Ezi-SERVO II-PE-60L-A	EzM2-60L-A	EzS2-PE-60L-A
Ezi-SERVO II-PE-60L-B	EzM2-60L-B	EzS2-PE-60L-B

Motor Specification Table

Model		Unit	20		28			35	
			20M	20L	28S	28M	28L	35M	35L
DRIVE METHOD		-	BI-POLAR						
Number OF PHASES		-	2	2	2	2	2	2	2
VOLTAGE		VDC	2.75	3	3	3	3	2.88	4.59
CURRENT per PHASE		A	0.5	0.5	0.95	0.95	0.95	0.6	0.85
RESISTANCE per PHASE		Ohm	5.5	6	3.2	3.2	3.2	4.8	5.4
INDUCTANCE per PHASE		mH	2	2.6	2	2.7	3.2	6.1	6.5
HOLDING TORQUE		N·m	0.016	0.025	0.069	0.098	0.118	0.050	0.176
ROTOR INERTIA		g·cm^2	2.5	3.3	9	13	18	8	11
WEIGHTS		g	50	80	110	140	200	180	260
LENGTH(L)		mm	28	38	32	45	50	26	38
ALLOWABLE OVERHUNG LOAD (DISTANCE FROM END OF SHAFT)	3mm	N	18	18	30	30	30	22	22
	8mm		30	30	38	38	38	26	26
	13mm		-	-	53	53	53	33	33
	18mm		-	-	-	-	-	46	46
ALLOWABLE THRUST LOAD		N	Lower than motor weight						
INSULATION RESISTANCE		Mohm	100 MΩ MIN.(at 500VDC)						
INSULATION CLASS		-	CLASS B(130˚C)						
OPERATING TEMPERATURE		˚C	0 to 55						

Ezi-SERVO II Plus-E_ 20 Series

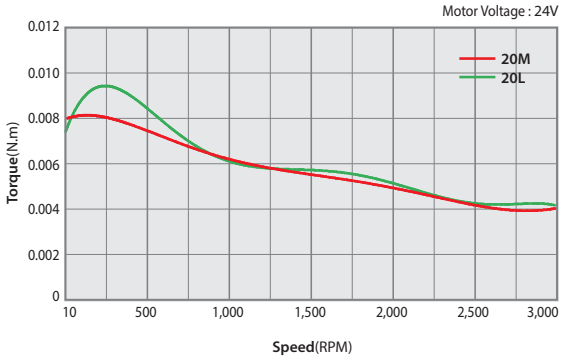

Ezi-SERVO II Plus-E_ 28 Series

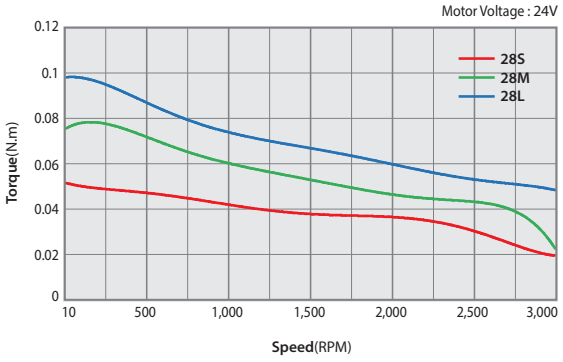

Ezi-SERVO II Plus-E_ 35 Series

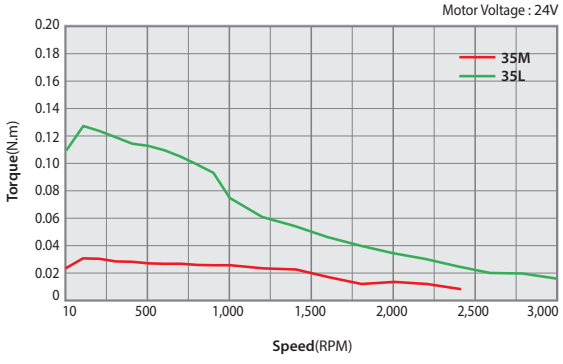

Ezi-SERVO II Plus-E_ 42 Series

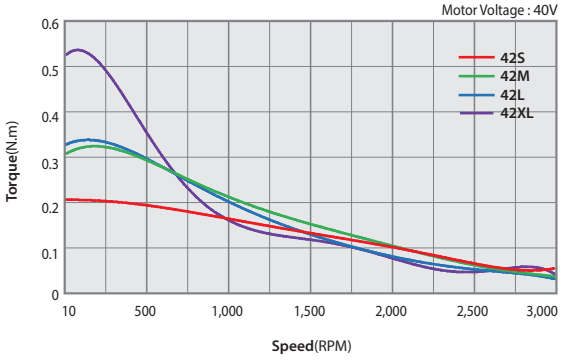

42				56			60		
42S	**42M**	**42L**	**42XL**	**56S**	**56M**	**56L**	**60S**	**60M**	**60L**
BI-POLAR									
2	2	2	2	2	2	2	2	2	2
3.36	4.32	4.56	7.2	1.56	1.62	2.64	1.32	1.48	2.2
1.2	1.2	1.2	1.2	3	3.0	3.0	4.0	4.0	4.0
2.8	3.6	3.8	6	0.52	0.54	0.88	0.33	0.37	0.55
5.4	7.2	8	15.6	1.2	2	4	0.75	1.1	2.7
0.32	0.44	0.5	0.65	0.64	1	1.5	0.88	1.28	2.4
35	54	77	114	180	280	520	240	490	690
250	280	350	500	500	720	1150	600	1000	1300
34	40	48	60	46	55	80	47	56	85
22	22	22	22	52	52	52	70	70	70
26	26	26	26	65	65	65	87	87	87
33	33	33	33	85	85	85	114	114	114
46	46	46	46	123	123	123	165	165	165
Lower than motor weight									
100 MΩ MIN.(at 500VDC)									
CLASS B(130˚C)									
0 to 55									

Ezi-SERVO II Plus-E_ 56 Series

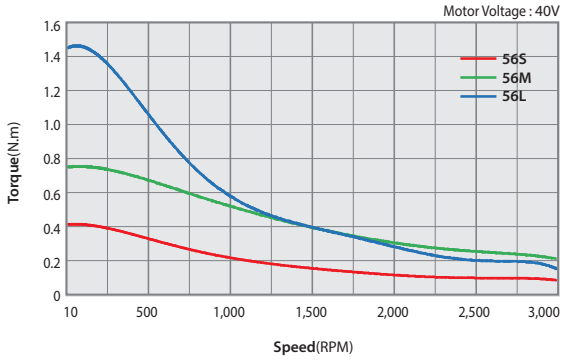

Ezi-SERVO II Plus-E_ 60 Series

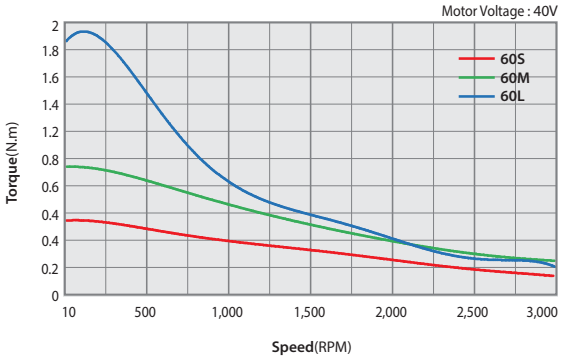

Motor Drawing

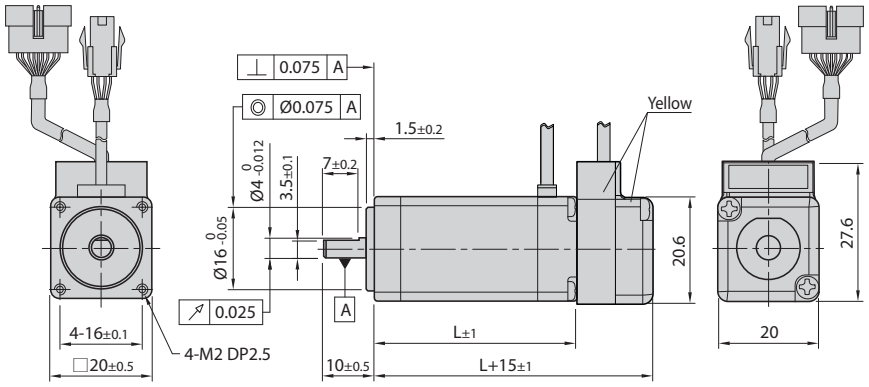

20mm

Model name	Length(L)
EzM2-20M	28
EzM2-20L	38

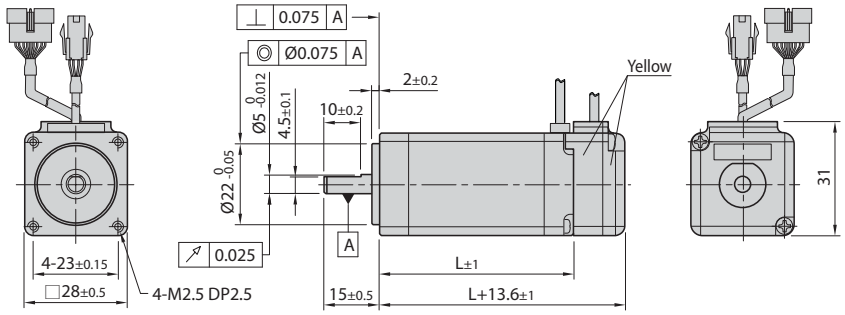

28mm

Model name	Length(L)
EzM2-28S	32
EzM2-28M	45
EzM2-28L	50

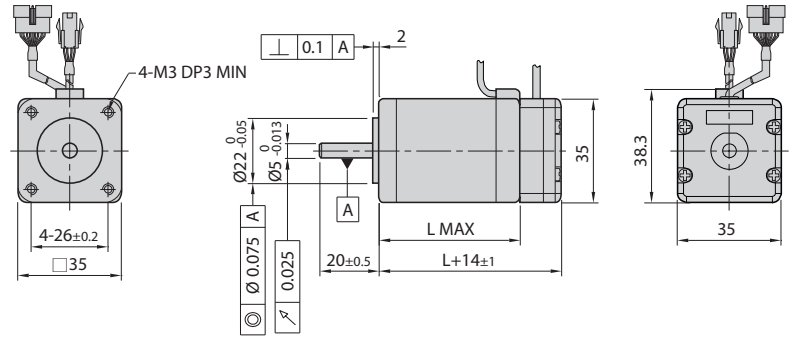

35mm

Model name	Length(L)
EzM2-35M	26
EzM2-35L	38

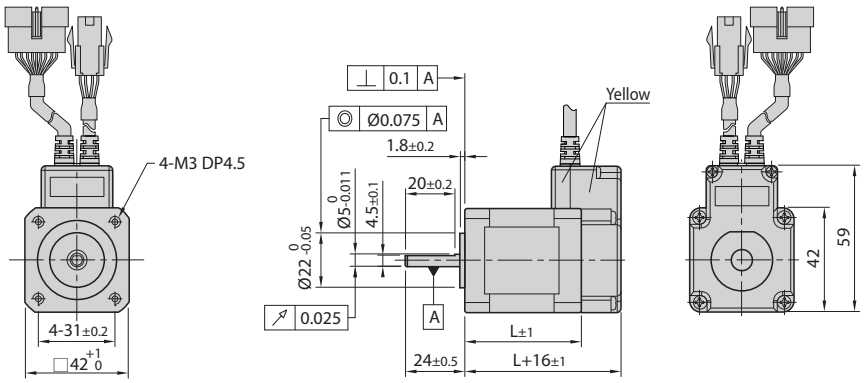

42mm

Model name	Length(L)
EzM2-42S	34
EzM2-42M	40
EzM2-42L	48
EzM2-42XL	60

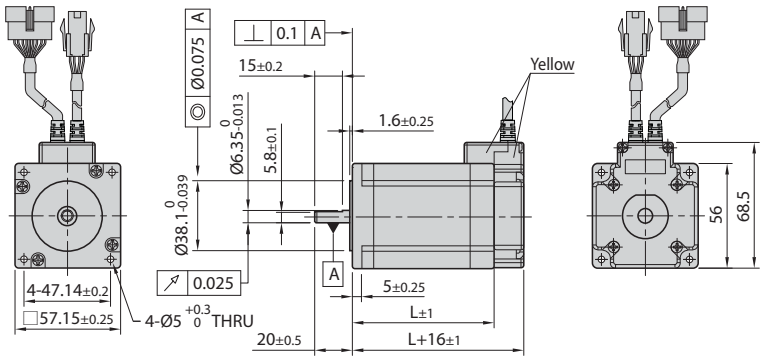

※ There are 2 kinds size of front shaft diameter for EzM2-56 series as Φ6.35 and Φ8.0.

56mm

Model name	Length(L)
EzM2-56S	46
EzM2-56M	55
EzM2-56L	80

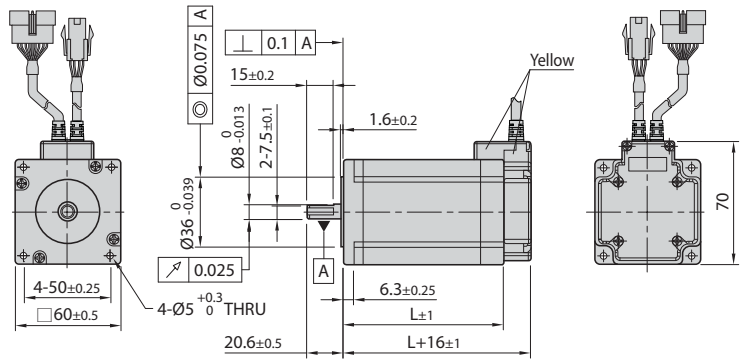

60mm

Model name	Length(L)
EzM2-60S	47
EzM2-60M	56
EzM2-60L	85

Drive Specification

Specifications

Motor		EzM2-20 series	EzM2-28 series	EzM2-35 series	EzM2-42 series	EzM2-56 series	EzM2-60 series
Drive		EzS2-PE-20 series	EzS2-PE-28 series	EzS2-PE-35 series	EzS2-PE-42 series	EzS2-PE-56 series	EzS2-PE-60 series
Input Voltage		24VDC ±10%					
Control Method		Closed Loop Control with 32bit ARM					
Multi Axes Drive		Maximum 254 axis operating(Selectable IP : 1~254)					
Position Table		256 Motion Command Steps(Speed, External start, Jump, Loop, Wait and PT finish etc.)					
Current Consumption		Max. 500mA(Except Motor Current)					
Operating Condition	Ambient Temperature	· In Use : 0~50˚C · In Storage : -20~70˚C					
	Humidity	· In Use : 35~85%RH(Non-condensing) · In Storage : 10~90%RH(Non-condensing)					
	Vib. Resist.	0.5G					
Function	Rotation Speed	0~3,000[rpm]					
	Resolution[ppr]	· 4,000[ppr] Encoder model : 500 / 1,000 / 1,600 / 2,000 / 3,600 / 5,000 / 6,400 / 7,200 / 10,000 / 4,000 · 10,000[ppr] Encoder model : 500 / 1,000 / 1,600 / 2,000 / 3,600 / 5,000 / 6,400 / 7,200 / 10,000 · 16,000[ppr] Encoder model : 500 / 1,000 / 1,600 / 2,000 / 3,600 / 5,000 / 6,400 / 7,200 / 10,000 / 16,000 · 20,000[ppr] Encoder model : 500 / 1,000 / 1,600 / 2,000 / 3,600 / 5,000 / 6,400 / 7,200 / 10,000 / 20,000 (Selected by Parameter)					
	Protection Functions	Over Current Error, Over Speed Error, Position Tracking Error, Over Load Error, Over Temperature Error, Over Regenerated Voltage Error, Motor Connect Error, Encoder Connect Error, Motor Voltage Error, In-Position Error, Position Overflow Error					
	LED Display	Power status, Alarm status, In-Position status, Servo on status					
	In-Position Selection	0~63(Selectable by Parameter)					
	Position Gain Selection	0~63(Selectable by Parameter)					
	Rotational Direction	CW / CCW(Selectable by Parameter)					
I/O Signal	Input Signal	3 dedicated input(LIMIT+, LIMIT-, ORIGIN), 7 programmable input(Photocoupler)					
	Output Signal	1 dedicated output(Compare Out), 9 programmable output(Photocoupler)					
Communication Interface		Ethernet communication with PC, Dual port Ethernet switch embeded, Comunicatio speed : 10/100bps - T/Tx Full Duplex					
Position Control		Incremental mode / Absolute mode Data Range : -134,217,728 to +134,217,727pulse, Operating speed : Max. 3,000[rpm]					
Return to Origin		Origin Sensor, Z phase, ±Limit sensor, Torque					
GUI		User Interface Program within Windows					
Software		Motion Library(DLL) for windows XP / 7 / 8 / 10.					

Drive Dimension(mm)

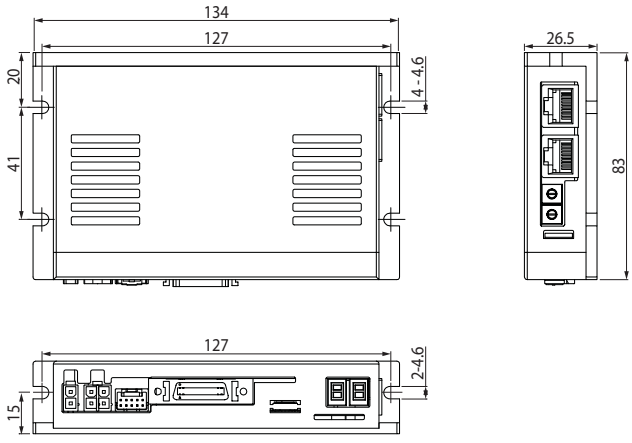

Setting and Operation

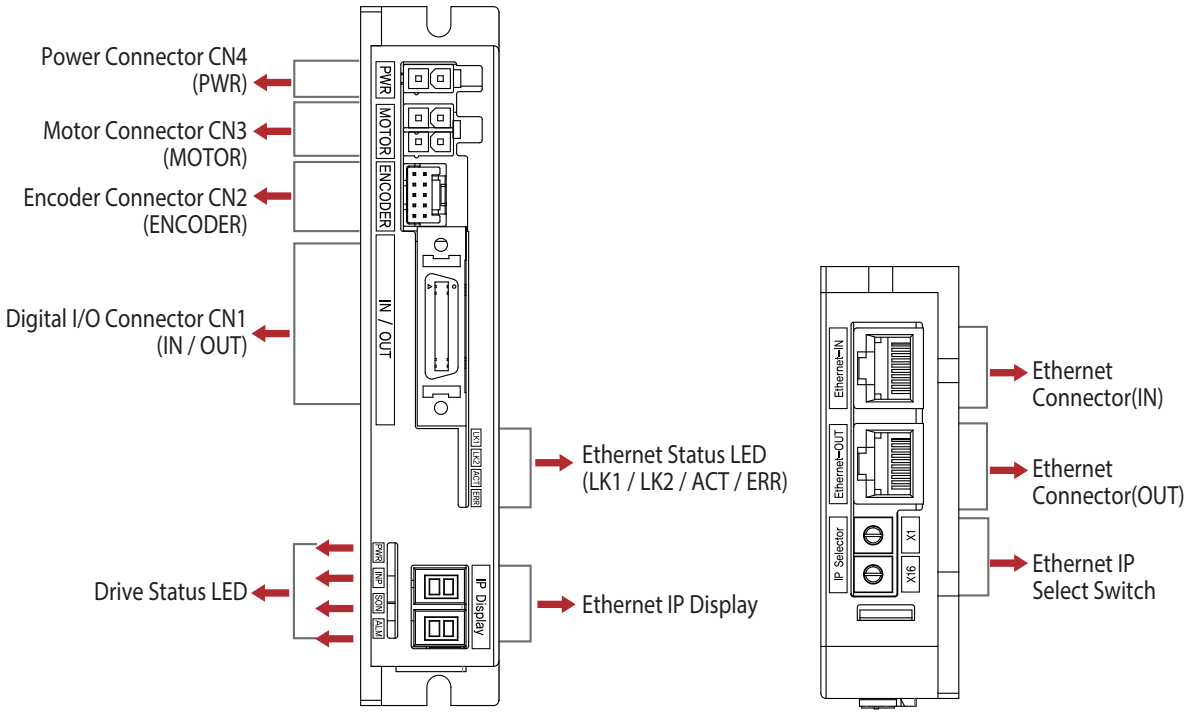

System Configuration

Status Monitor LED

1. EtherCAT Status Monitor LED

LED indicates communication status of Ethernet. Link / Activity LED exists on each port of Ethernet.

Name	Color	Status	Explanation
Error	Red	Off	No Error status or Power Off
		Single Flash	Local Error
LK1 / LK2	Green	Off	Link deactivated
		On	Link activated
Activity	Yellow	Off	No operating
		Flickering	Operating

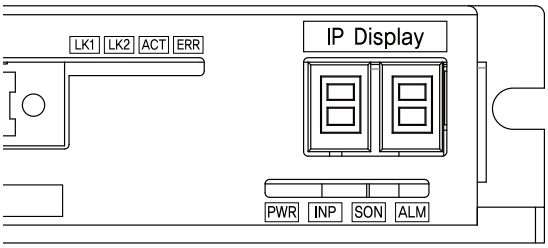

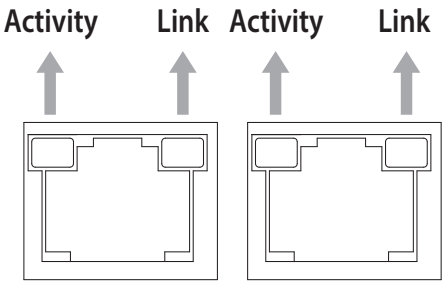

2. Status LED

Indication	Color	Function	ON/OFF Condition
PWR	Green	Power Input Indication	LED is turned ON when power is applied
INP	Yellow	Complete Positioning Motion	Lights On when Positioning error reaches within the preset pulse selected by rotary switch
SON	Orange	Servo On / Off Indication	· Servo On : Lights On · Servo Off : Lights Off
ALM	Red	Alarm indication	Flash when protection function is activated

3. Protection functions and LED flash times

Error Code *2	Protection	Conditions
E-001	Over current Error	The current through power devices in inverter exceeds the limit value
E-002	Over speed Error	Motor speed exceed 3,000[rpm]
E-003	Position tracking Error	Position error value is higher than 90˚ in motor run state
E-004	Over load Error	The motor is continuously operated more than 5 second under a load exceeding the Max. torque
E-005	Over temperature Error	Temperature of inside of drive exceed 85˚C
E-006	Over regenerativedvoltage Error	Back EMF of motor exceeds limit value *1
E-007	Motor connect Error	The power is ON without connection of the motor cable to drive
E-008	Encoder connect Error	There is connection error between drive and encoder
E-010	In-Position Error	After operation is finished, a position error occurs
E-015	Position overflow Error	Position error value is higher than 90˚ in motor stop state

*1 : Voltage limit of Back-EMF depends on motor model

*2 : The Alarm code is displying on the 7-Segment. instead of alarm No. when alarm occurd.

※ Please refer to User Manual for the other protection Functions.

Connector

1. Input / Output Signal(IN / OUT)

No	Function	I/O
1	LIMIT+	Input
2	LIMIT-	Input
3	ORIGIN	Input
4	Digital Input 1	Input
5	Digital Input 6	Input
6	Digital Input 7	Input
7	Compare Out 1	Output
8	Digital Output 1	Output
9	Digital Output 2	Output
10	Digital Output 3	Output
11	Digital Output 4	Output
12	Digital Output 5	Output
13	Digital Output 6	Output

No	Function	I/O
14	Digital Input 2	Input
15	Digital Input 3	Input
16	Digital Input 4	Input
17	Digital Input 5	Input
18	Digital Input 8	Input
19	Digital Input 9	Input
20	Digital Output 7	Output
21	Digital Output 8	Output
22	Digital Output 9	Output
23	BRAKE+	Output
24	BRAKE-	Output
25	24VDC GND	Input
26	24VDC	Input

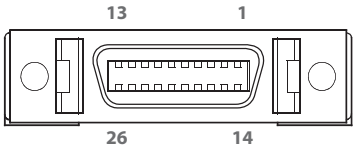

2. Encoder Connector(Encoder)

No	Function	I/O
1	A+	Input
2	A-	Input
3	B+	Input
4	B-	Input
5	Z+	Input

No	Function	I/O
6	Z-	Input
7	5VDC	Output
8	5VDC GND	Output
9	F. GND	----
10	F. GND	----

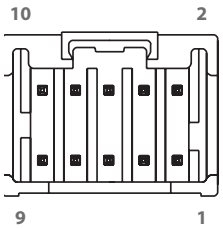

3. Motor Connector(Motor)

No	Function
1	A Phase
2	B Phase
3	/ A Phase
4	/ B Phase

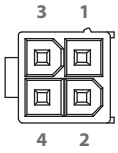

4. Power Connector(PWR)

No	Function
1	24VDC ±10%
2	GND

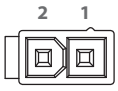

5. Ethernet Communication Connector

No	Function
1	TD+
2	TD-
3	RD+
4	----
5	----

No	Function
6	RD-
7	----
8	----
Connector Hood	FG

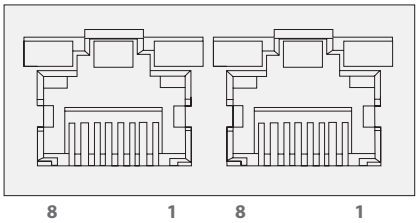

Switch

1. Ethernet IP Display and Select Switch

It is to be set from 1 to 254. Please set the IP not to overap each other.
(Basic set up is "192.168.xxx" and xxx is to be set by switch)

Ex) In case of SW 1 : 7, and SW 2:5
5×16 +7×1 =87 / IP is to be set as 192.168.0.87

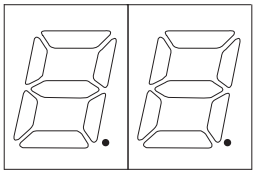

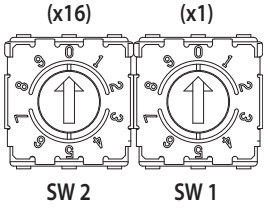

System Configuration

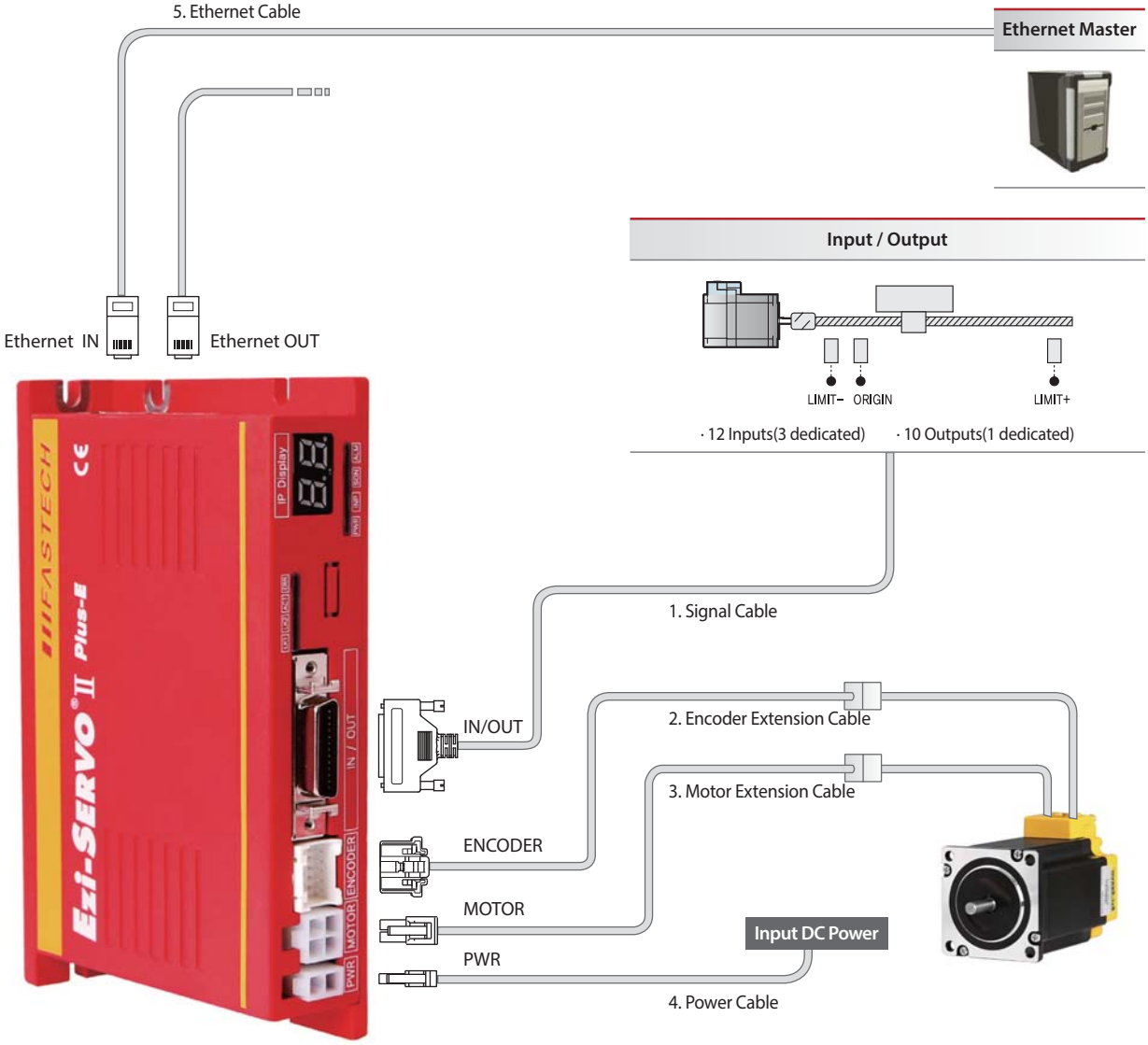

Type	Signal Cable	Encoder Cable	Motor Cable	Power Cable	Ethernet Cable
Standard Length	-	30cm	30cm	-	-
Max. Length	20m	20m	20m	2m	100m

Accessories

Purpose	ITEM	Standard	Manufacturer
CN 1 : Input / Output Signal(IN/OUT)	Connector	10126-3000PE	3M
	Shell	10326-52FO-008	
CN 2 : Encoder Connector(ENCODER)	Housing	51353-1000	MOLEX
	Terminal	56134-9000	
CN 3 : Motor Connection(MOTOR)	Housing	5557-04R	MOLEX
	Terminal	5556T	
CN 4 : Power Connection(PWR)	Housing	5557-02R	MOLEX
	Terminal	5556T	

Option Cable

1. Signal Cable

Available to extended connection between motor and Ezi-SERVO II Plus-E

Model Name	Length[m]	Remark
CSVR-S-□□□F	□□□	Normal Cable
CSVR-S-□□□M	□□□	Robot Cable

※ □□□ is for Cable Length. The unit is 1m and Max. 20m length.

2. Encoder Extension Cable

Available to extended connection between Encoder and Ezi-SERVO II Plus-E

Model Name	Length[m]	Remark
CSVO-E-□□□F	□□□	Normal Cable
CSVO-E-□□□M	□□□	Robot Cable

※ □□□ is for Cable Length. The unit is 1m and Max. 20m length.

3. Motor Extension Cable

Available to connect between Ezi-SERVO II Plus-E and Input / Output signals.

Model Name	Length[m]	Remark
CSVO-M-□□□F	□□□	Normal Cable
CSVO-M-□□□M	□□□	Robot Cable

※ □□□ is for Cable Length. The unit is 1m and Max. 20m length.

4. Power Cable

Available to connect between Power and Ezi-SERVO II Plus-E

Model Name	Length[m]	Remark
CSVO-P-□□□F	□□□	Normal Cable
CSVO-P-□□□M	□□□	Robot Cable

※ □□□ is for Cable Length. The unit is 1m and Max. 2m length.

5. Ethernet Cable

Shielded twisted pair(STP) cable of category 5 or higher.

Model Name	Length[m]	Remark
CGNR-EC-□□□F	□□□	Normal Cable

※ □□□ is for Cable Length. The unit is 1m and Max. 100m length.

Option

1. TB-Plus(Interface Board)

Available to connect more conveniently between Input / Output signal and Ezi-SERVO II Plus-E.



2. Interface Cable

Available to Connect between TB-Plus Interface Board and Ezi-SERVO II Plus-E

Model Name	Length[m]	Remark
CIFD-S-□□□F	□□□	Normal Cable
CIFD-S-□□□M	□□□	Robot Cable

※ □□□ is for Cable Length. The unit is 1m and Max. 2m length.

External Wiring Diagram

Ezi-SERVO II Plus-E

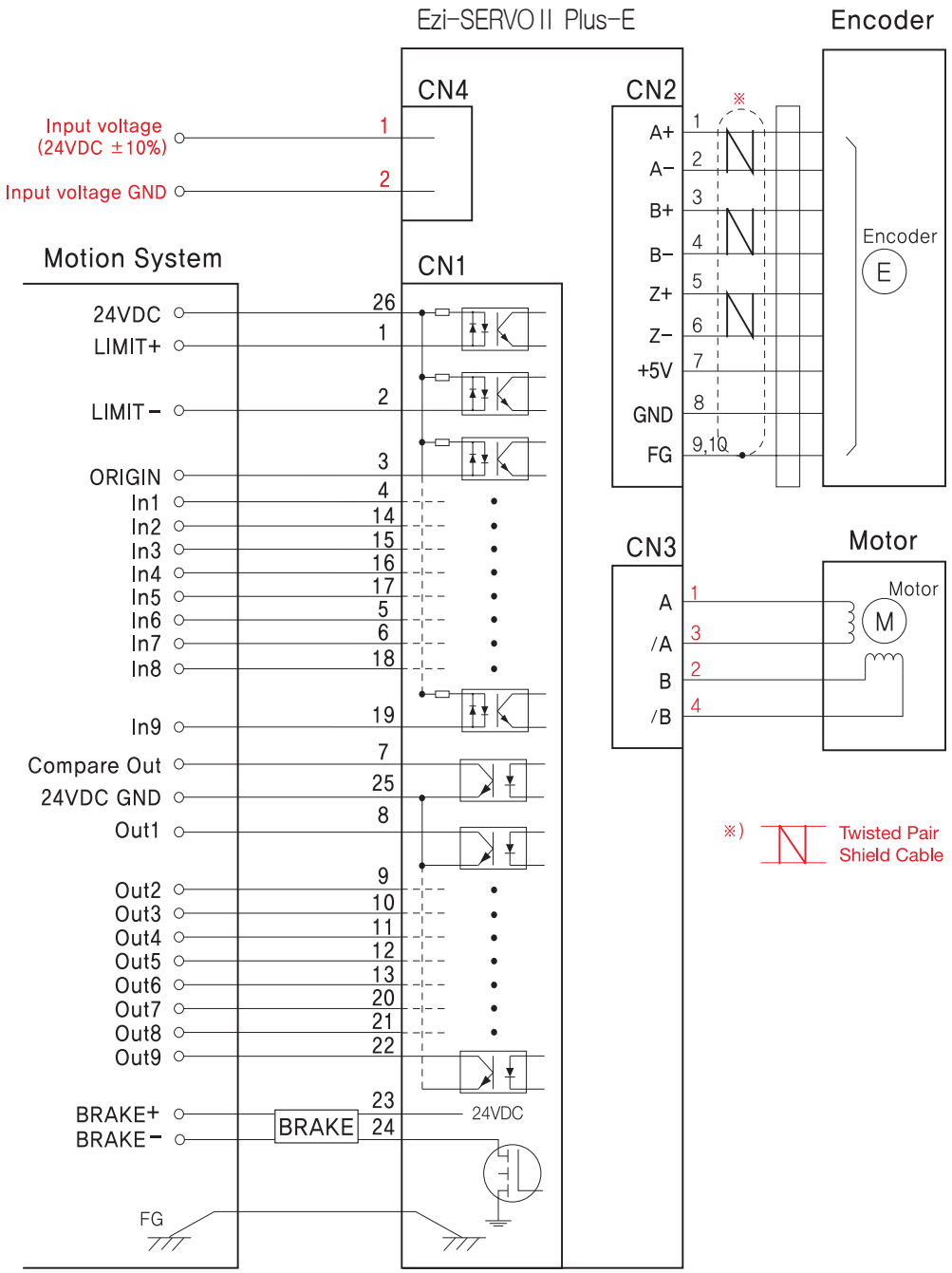

FASTECH

Fast, Accurate, Smooth Motion

FASTECH Co., Ltd.
Rm#1202, 401-dong, Bucheon Techno-Park,
655, Pyeongcheon-ro, Bucheon-si Gyeonggi-do,
Republic of Korea (Zip:14502)
TEL : +82-32-234-6300 FAX : +82-32-234-6302
E-mail : fastech@fastech.co.kr
Homepage : www.fastech.co.kr

©Copyright 2016 FASTECH Co., Ltd.
All Rights Reserved. Jan 19, 2018 Rev.2