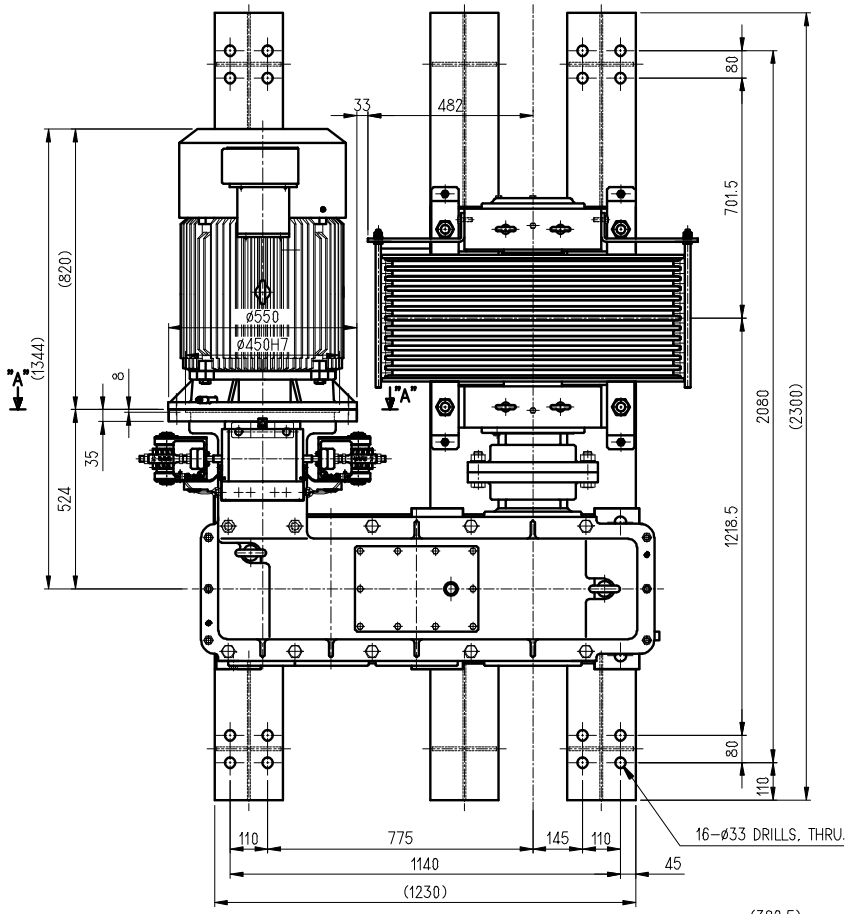
33
482
80
701.5
2080
(2300)
1218.5
(820)
(1344)
524
35
8
ø550
ø450H7
"A"
"A"
80
110
110
775
145
110
1140
45
(1230)
16-ø33 DRILLS, THRU.

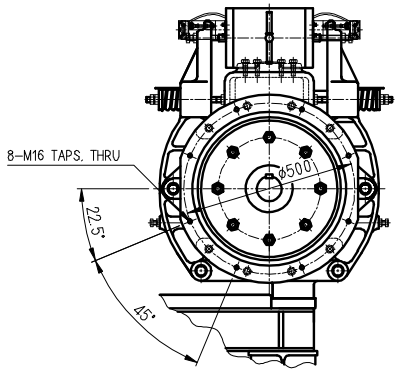
8-M16 TAPS, THRU
ø500
22.5°
45°

SECTION "A"-"A"

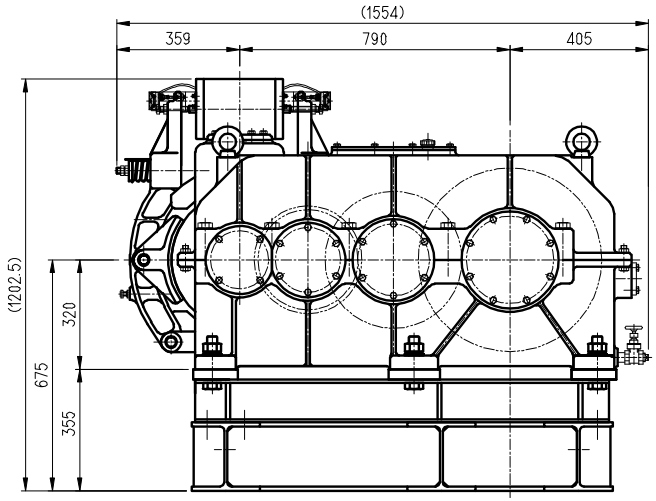
(1554)
359
790
405
(1202.5)
675
320
355

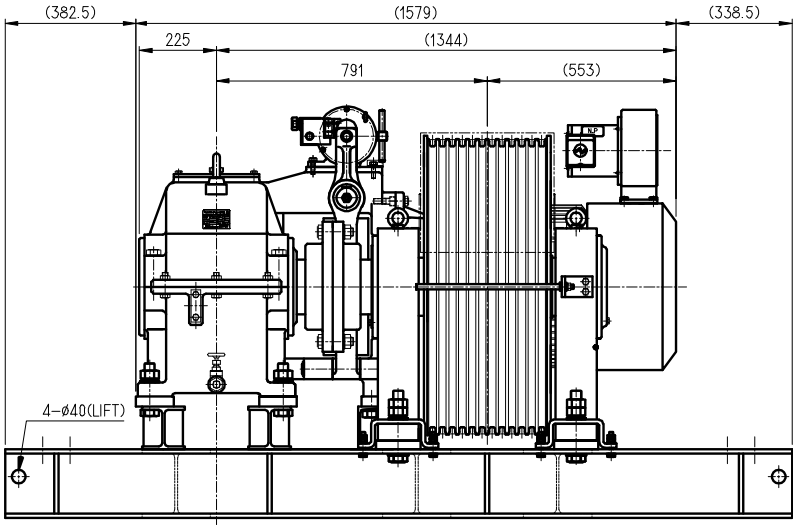
(382.5)
(1579)
(338.5)
225
(1344)
791
(553)
4-ø40(LIFT)