STANDARD EQUIPMENT

- ISO Standard cabin
  - All-weather steel cab with 360° visibility
  - Safety glass windows
  - Rise-up type windshield wiper
  - Sliding fold-in front window
  - Sliding side window(LH)
  - Lockable door
  - Hot & cool box
  - Storage compartment & Ashtray
  - Cabin roof-steel cover
  - Radio & USB player
  - 12 volt power outlet (24V DC to 12V DC converter)
- Computer aided power optimization (New CAPO) system
  - 3-power mode, 2-work mode, User mode
  - Auto deceleration & one-touch deceleration system
  - Auto warm-up system
  - Auto overheat prevention system
- Automatic climate control
  - Air conditioner & heater
  - Defroster
- Self-diagnostics system
- Starting Aid (air grid heater) for cold weather
- Centralized monitoring
  - LCD display
  - Engine speed or Trip meter/Accel.
  - Clock
  - Gauges
  - Fuel level gauge
  - Engine coolant temperature gauge
  - Hyd. oil temperature gauge
  - Warnings
  - Overload
  - Communication error
  - Low battery
  - Air cleaner clogging
  - Indicators
  - Max power
  - Low speed/High speed
  - Fuel warmer
  - Auto idle
- Door and cab locks, one key
- Two outside rearview mirrors
- Fully adjustable suspension seat with seat belt
- Pilot-operated slidable joystick
- Four front working lights
- Electric horn
- Batteries (2 x 12V x 160 AH)
- Battery master switch
- Removable clean-out dust net for cooler
- Automatic swing brake
- Removable reservoir tank
- Fuel pre-filter
- Boom holding system
- Arm holding system
- Track shoes (600mm)
- Track rail guard
- Accumulator for lowering work equipment
- Electric transducer
- Lower frame under cover (Normal)

OPTIONAL EQUIPMENT

- Fuel filler pump (35 L/min)
- Beacon lamp
- Single-acting piping kit (breaker, etc.)
- Double-acting piping kit (clamshell, etc.)
- Quick coupler
- Travel alarm
- Booms
  - 6.15 m
  - 6.45 m
- Arms
  - 2.2 m
  - 2.5 m
  - 3.2 m
  - 4.05 m
- Cabin FOPS/FOG (ISO/DIS 10262 Level 2)
  - FOPS (Falling Object Protective Structure)
  - FOG (Falling Object Guard)
- Cabin ROPS (ISO 12117-2)
  - ROPS (Roll Over Protective Structure)
  - *220LC-9S/220-9S Only
- Cabin lights
- Cabin front window rain guard
- Sun visor
- Track shoes
  - Triple grousers shoe (700 mm)
  - Triple grousers shoe (800 mm)
  - Triple grousers shoe (900 mm)
  - Double grousers shoe (700 mm)
  - Full track rail guard
- Lower frame under cover (Additional)
- Tool kit
- Rearview camera
- Seat
  - Mechanical suspension seat with heater
- Hi-mate (Remote Management System)
- Fuel warmer
- Air compressor
- Rear work lamp
- 4-pattern change
- Cabin guard front
  - Wire net
  - Fine net

* Standard and optional equipment may vary. Contact your Hyundai dealer for more information. The machine may vary according to International standards.
* The photos may include attachments and optional equipment that are not available in your area.
* Materials and specifications are subject to change without advance notice.
* All imperial measurements rounded off to the nearest pound or inch.

PLEASE CONTACT

HYUNDAI HEAVY INDUSTRIES
CONSTRUCTION EQUIPMENT

Head Office
1000 BANGEOJINSUNHWAN-DORO, DONG-GU, ULSAN, 682-792, KOREA
TEL:(82)52-202-7722, 9807 FAX:(82)52-202-7720

999009-600040

www.hyundai-ce.com 2015. 11 Rev.7

We build a better future

Robex 330LC-9S

With Tier 2 Engine installed



*Photo may include optional equipment.

HYUNDAI HEAVY INDUSTRIES

Pride at Work

Hyundai Heavy Industries strives to build state-of-the art earthmoving equipment to give every operator maximum performance, more precision, versatile machine preferences, and proven quality. Take pride in your work with Hyundai!

Robex 330LC-9S



*Photo may include optional equipment.

Machine Walk-Around

Engine Technology

Easy & Simple serviceability
Low noise / Auto engine warm up feature / Anti-restart feature

Hydraulic System Improvements

New patented hydraulic control for improved controllability / Improved control valve design for added efficiency and smoother operation / New auto boom and swing priority system for optimum speed / New auto power boost feature for additional power when needed / Improved arm-in and boom-down flow regeneration system for added speed and efficiency

Pump Compartment

Industry-leading, powerful, reliable Kawasaki designed, variable volume in-line axial piston pumps
New compact solenoid block equipped with 3 solenoid valves, 1 EPPR valve, 1 check valve accumulator and pilot filter - controls 2 speed travel, power boost, boom priority, safety lock

Enhanced Operator Cab

Improved Visibility
Enlarged cab with improved visibility
Larger right-side glass, now one piece, for better right visibility
Safety glass windows on all sides - less expensive than (polycarbonate) and won't scratch or fade
Closeable sunshade for operator convenience / Reduced front window seam for improved operator view

Improved Cab Construction
New steel tube construction for added operator safety, protection and durability
New window open/close mechanism designed with cable and spring lift assist and single latch release

Improved Suspension Seat / Console Assembly
Ergonomic joysticks with auxiliary control buttons for attachment use. Now with new sleek styling

Advanced 7" Color Cluster
New Color LCD Display with easy to read digital gauges for hydraulic oil temperature, water temperature, and fuel. Simplified design makes adjustment and diagnostics easier. Also, new enhanced features such as rear-view camera are integrated into monitor.
3 power modes : (P) Power, (S) Standard, (E) Economy, 2 work modes : Dig & Attachment, (U) User mode for operator preference
Enhanced self-diagnostic features with GPS / satellite technology
One pump flow or two pump flow for optional attachment is now selectable through the cluster / New anti-theft system with password capability
Boom speed and arm regeneration are selectable through the monitor.
Auto power boost is now available - selectable (on/off) through the monitor.
Powerful air conditioning and heat with auto climate control, 20% more heat and air output than 7 series!

Hi-mate (Remote Management System) works through GPS/satellite technology to ultimately provide better customer service and support.

Undercarriage

Sealed track chain (urethane seals) / Standard track rail guard / Comfortable bolt-on steps
Large upper roller cut-outs for debris clean-out / Tapered side frames for debris clean-out / Grease-type track tensioner

Preference

Operating a 9S Series is unique to every operator. Operators can fully customize their work environment and operating preferences to fit their individual needs.

*Photo may include optional equipment.



Wide Cabin with Excellent Visibility

The newly designed cabin was conceived for more space, a wider field of view and operator comfort. Special attention was given to a clear, open and convenient interior with plenty of visibility on the machine surroundings and the job at hand. This well balanced combination of precision aspects put the operator in the perfect position to work safely and securely.

Operator Comfort

In 9S Series cabin you can easily adjust the seat, console and armrest settings to best suit your personal operating preferences. Seat and console position can be set together and independent from each other. Other preference settings that add to overall operator comfort include the fully automatic high capacity airconditioning system and the radio / USB player.





Reduced Stress

Work is stressful enough. Your work environment should be stress free. Hyundai's 9S Series provides improved cab amenities, additional space and a comfortable seat to minimize stress to the operator. A powerful climate control system provides the operator with optimum air temperature. An advanced audio system with USB player, AM/FM stereo is perfect for listening to music favorites.



Operator - Friendly Cluster

The advanced new cluster with 7 inch wide color LCD screen and toggle switch allows the operator to select his personal machine preferences. Power and work mode selection, self diagnostics, optional rear-view camera, maintenance check lists and start-up machine security were integrated into the cluster to make the machine more versatile and the operator more productive.



Precision

Innovative hydraulic system technologies make the 9S series excavator fast, smooth and easy to control.

*Photo may include optional equipment.

Computer Aided Power

The engine horsepower and hydraulic horsepower together in unison through the advanced CAPO(Computer Aided Power Optimization) system, flow for the job at hand. Operator can set their own preferences for boom or swing priority, power mode selection and optional work tools at the touch of a button.
The CAPO system also provides complete self diagnostic features and digital gauges for important information like hydraulic oil temperature, water temperatures and fuel level. This system interfaces with multiple sensors placed throughout the hydraulic system as well as the hydraulic flow.

Power Mode

P (Power Max) mode maximizes machine speed and power for mass production.
S (Standard) mode provides a reduced, fixed rpm for optimum performance and improved fuel economy. For maximum fuel savings and improved control, E (Economy) mode provides precise flow based on load demand. Three unique power modes provide the operator with custom power, speed and fuel economy.

Work Mode

The work mode allows the operator to select single flow attachments like a hydraulic breaker or bi-directional flow attachments like a crusher. Flow settings unique to each attachment can be programmed from within the cluster.

User Mode

Some jobs require more precise machine settings. Using the versatile U (User) mode, the operator can customize engine speed, pump output, idle speed and other machine settings for the job at hand.

Improved Hydraulic System



To achieve optimum precision, Hyundai redesigned the hydraulic system to provide the operator with super fine touch and improved controllability. Improved pump flow control reduces flow when controls are not being used to minimize fuel consumption.
Improved spool valves in the control valve are engineered to provide more precise flow to each function with less effort.
Improved hydraulic valves, precision-designed variable volume piston pumps, fine-touch pilot controls, and enhanced travel functions make any operator running a 9S Series look like a smooth operator. Newly improved features include arm-in and boom-down flow regeneration, improved control valve technology and innovative auto boom and swing priority for optimal performance in any application.



Auto Boom-swing Priority

This smart function automatically and continuously looks the ideal hydraulic flow balance for the boom and swing motions of the machine. The advanced CAPO system monitors the hydraulic system and adjusts its settings to maximize performance and productivity.

Performance

9S series is designed for maximum performance to keep the operator working productively.



*Photo may include optional equipment.



Track Rail Guard & Adjusters

Durable track rail guards keep track links in place. Track adjustment is made easy with standard grease cylinder track adjusters and shock absorbing springs.

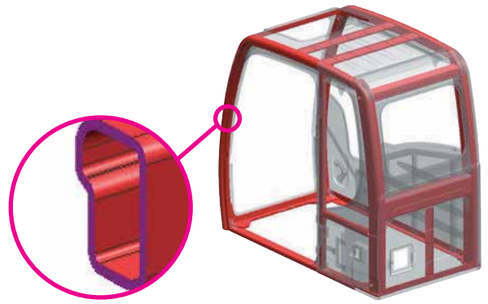

Structure Strength

The 9S Series cabin structure has been fitted with stronger but slimmer tubing for more safety and improved visibility. Low-stress, high strength steel is integrally welded to form a stronger, more durable upper and lower frame. Structural integrity was tested by way of FEM (Finite Elements Method) analysis and long-term durability tests.

HYUNDAI HM8.3

The six cylinders, 4 cycle, turbo-charged, charger air cooled engine is built for power, reliavility, economy and low emissions.

A More Reliable Way To Reach Your Dream.

Bosch in-line fuel pump delivers higher injection pressures for cleaner combustion and gives the operator option of using lowlubricity fuels.
Holset HX40 turbocharger optimizes operation across the torque curve using the wastegate turbo, for excellent low-end torque. Unitized block design results in 40% fewer parts than traditional diesels, with fewer joints and simplified maintenance.
Resistive grid heating preheats intake air electrically to enhance startability.
Dual ni-resist pistons minimize oil consumption and increase power and durability.

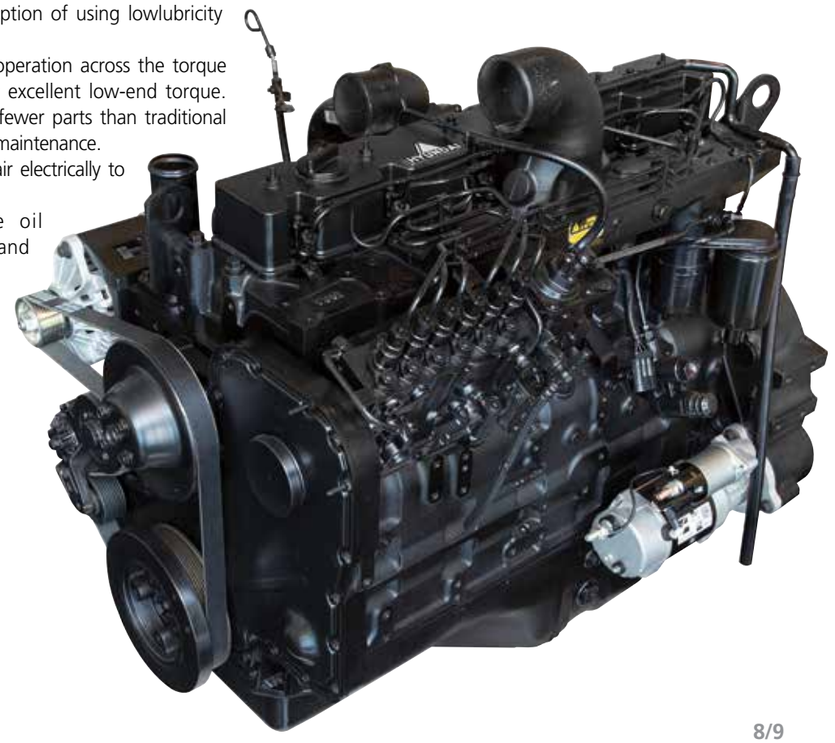

Profitability

9S series is designed to maximize profitability through improved efficiencies, enhanced service features and longer life components.

*Photo may include optional equipment.



Hi-mate (Remote Management System)

Hi-mate, Hyundai's proprietary remote management system, provides operators and dealer service personnel access to vital service and diagnostic information on the machine from any computer with internet access. Users can pinpoint machine location using digital mapping and set machine work boundaries, reducing the need for multiple service calls. Hi-mate saves time and money for the owner and dealer by promoting preventative maintenance and reducing machine downtime.

Fuel Efficiency

9S Series excavators are engineered to be extremely fuel efficient. New innovations like two-stage auto decel system and the new economy mode help to conserve fuel and reduce the impact on the environment.







Easy Access

Ground-line access to filters, lube fittings, fuses, machine computer components and wide open compartments makes service more convenient on the 9S series.



Long-Life Components

9S series excavators were designed with bushings designed for long-life lube intervals (250 hrs) & polymer shims (wear resistant, noise reducing), long-life hydraulic filters (1,000hrs), long-life hydraulic oil (5,000hrs), more efficient cooling systems and integrated preheating systems which extend service intervals, minimize operating costs and reduce machine down time.

Specifications

ENGINE / R330LC-9S

MAKER / MODEL			HYUNDAI HM8.3
Type			Water cooled, 4 cycle Diesel, 6-cylinders in line, direct injection, turbocharged, charger air cooled, low emission
Rated flywheel horse power	SAE	J1995 (gross)	263 HP at 1,900 rpm
		J1349 (net)	252 HP at 1,900 rpm
	DIN	6271 / 1 (gross)	266 PS at 1,900 rpm
		6271 / 1 (net)	255 PS at 1,900 rpm
Max. torque			124.3 kgf·m / 1,300 rpm
Bore X stroke			114mm X 135mm
Piston displacement			8,300cc
Batteries			2 X 12V X 160AH
Starting motor			24V, 7.2 kW
Alternator			24V, 90 Amp

HYDRAULIC SYSTEM

MAIN PUMP	
Type	Variable displacement tandem axis piston pumps
Rated flow	2 X 282 L /min
Sub-pump for pilot circuit	Gear pump

Cross-sensing and fuel saving pump system.

HYDRAULIC MOTORS	
Travel	Two speed axial pistons motor with brake valve and parking brake
Swing	Axial piston motor with automatic brake

RELIEF VALVE SETTING	
Implement circuits	350 kgf/cm^2
Travel	350 kgf/cm^2
Power boost (boom, arm, bucket)	380 kgf/cm^2
Swing circuit	300 kgf/cm^2
Pilot circuit	40 kgf/cm^2
Service valve	Installed

HYDRAULIC CYLINDERS	
No. of cylinder bore X stroke	Boom: 2-150 X1,480 mm
	Arm: 1-160 X 1,685 mm
	Bucket: 1-140 X 1,285 mm

DRIVES & BRAKES

Drive method	Fully hydrostatic type
Drive motor	Axial piston motor, in-shoe design
Reduction system	Planetary reduction gear
Max. drawbar pull	29,500 kgf
Max. travel speed (high) / (low)	5.8 km/hr / 3.4 km/hr
Gradeability	35° (70 %)
Parking brake	Multi wet disc

CONTROL

Pilot pressure operated joysticks and pedals with detachable lever provide almost effortless and fatigueless operation.

Pilot control	Two joysticks with one safety lever (LH): Swing and arm, (RH): Boom and bucket (ISO)
Traveling and steering	Two levers with pedals
Engine throttle	Electric, Dial type

SWING SYSTEM

Swing motor	Fixed displacement axial pistons motor
Swing reduction	Planetary gear reduction
Swing bearing lubrication	Grease-bathed
Swing brake	Multi wet disc
Swing speed	9S: 10.0 rpm

COOLANT & LUBRICANT CAPACITY

Refilling	liter
Fuel tank	500
Engine coolant	40.0
Engine oil	28
Swing device-gear oil	6.0
Final drive(each)-gear oil	8.0 (7.8)
Hydraulic system(including tank)	330.0
Hydraulic tank	190.0

UNDERCARRIAGE

The X-leg type center frame is integrally welded with reinforced box-section track frames. The undercarriage includes lubricated rollers, idlers, track adjusters with shock absorbing springs and sprockets, and a track chain with double or triple grouser shoes.

Center frame	X - leg type
Track frame	Pentagonal box type
No. of shoes on each side	48 EA
No. of carrier roller on each side	2 EA
No. of track roller on each side	9 EA
No. of rail guard on each side	2 EA

OPERATING WEIGHT (APPROXIMATE)

Operating weight, including 6.450mm boom, 3,200mm arm, SAE heaped 1.44m^3 bucket, lubricant, coolant, full fuel tank, full hydraulic tank, and all standard equipments.

MAJOR COMPONENT WEIGHT	
Upperstructure	7,920 kg
Boom (with arm cylinder)	3,030 kg
Arm (with bucket cylinder)	1,770 kg

OPERATING WEIGHT				
Shoes			Operating weight	Ground pressure
Type	Width mm		kg	kgf/cm^2
Triple grouser	600 mm	R330LC-9S	32,700	0.63
		R330LC-9SH	33,000	0.64
		R330NLC-9S	32,500	0.62
		R330NLC-9SH	32,800	0.63
		R330LC-9S H/W	35,200	0.68
		R330LC-9SH H/W	35,500	0.68
	700 mm	R330LC-9S	33,280	0.55
		R330LC-9SH	33,580	0.55
		R330LC-9S H/W	35,800	0.59
		R330LC-9SH H/W	36,080	0.60
	800 mm	R330LC-9S	33,640	0.49
		R330LC-9SH	33,940	0.49
		R330LC-9S H/W	36,200	0.52
		R330LC-9SH H/W	36,440	0.53
	900 mm	R330LC-9S	34,040	0.44
		R330LC-9SH	34,340	0.44
Double grouser	700 mm	R330LC-9S H/W	36,680	0.60

BUCKETS

All buckets are welded with high-strength steel.

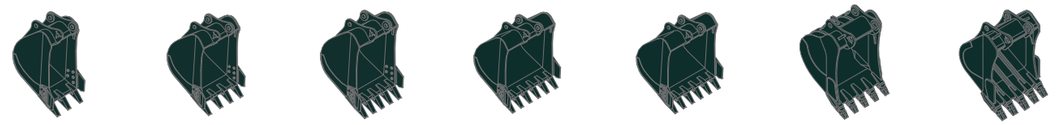

SAE heaped m^3	0.90	1.14	1.44	1.74	2.10	◈1.44	◉1.44 ◉1.73 ◉1.60 ◉1.83

Capacity m^3		Width mm (in)		Weight kg	Recommendation mm				
					6,450 Boom				6,150 Boom
SAE heaped	CECE heaped	Without side cutters	With side cutters		2,200 Arm	2,500 Arm	3,200 Arm	4,050 Arm	2,200 Arm
0.90	0.80	950	1,070	870	●	●	●	●	●
1.14	1.00	1,110	1,230	980	●	●	●	●	●
1.44	1.25	1,380	1,500	1,110	●	●	●	■	●
1.74	1.50	1,620	1,740	1,230	●	●	■	▲	●
2.10	1.80	1,910	2,030	1,370	■	■	▲	–	■
◈1.44	1.25	1,470	-	1,380	●	●	■	▲	●
◉1.44	1.25	1,470	-	1,470	●	●	■	▲	●
◉1.60	1.39	1,585	-	1,650	■	■	■	▲	●
◉1.73	1.50	1,710	-	1,650	■	■	▲	–	●
◉1.83	1.59	1,765	-	1,845	■	▲	▲	–	■

◈ Heavy duty bucket
◉ Rock-Heavy duty bucket

●: Applicable for materials with density of 2,000 kg /m^3 or less
■: Applicable for materials with density of 1,600 kg /m^3 or less
▲: Applicable for materials with density of 1,100 kg /m^3 or less

ATTACHMENT

Booms and arms are welded with a low-stress, full-box section design. 6.15m, 6.45m Booms and 2.2m, 2.5m, 3.2m, 4.05m Arms are available.

DIGGING FORCE

Boom	Length	mm	6,450				Remarks
	Weight	kg	3,030				
Arm	Length	mm	2,200	2,500	3,200	4,050	
	Weight	kg	1,560	1,650	1,770	1,870	
Bucket digging force	SAE	kN	189.3 [205.5]	189.3 [205.5]	189.3 [205.5]	189.3 [205.5]	[ ]: Power Boost
	ISO	kN	211.8 [230.0]	211.8 [230.0]	211.8 [230.0]	211.8 [230.0]	
Arm crowd force	SAE	kN	196.6 [213.4]	178.9 [194.2]	143.2 [155.5]	119.6 [129.9]	
	ISO	kN	202.8 [220.2]	185.1 [201.0]	147.1 [159.7]	122.7 [133.3]	

Note: Boom weight includes arm cylinder, piping, and pin
Arm weight includes bucket cylinder, linkage, and pin

Dimensions & Working Range

R330LC-9S / R330NLC-9S DIMENSIONS

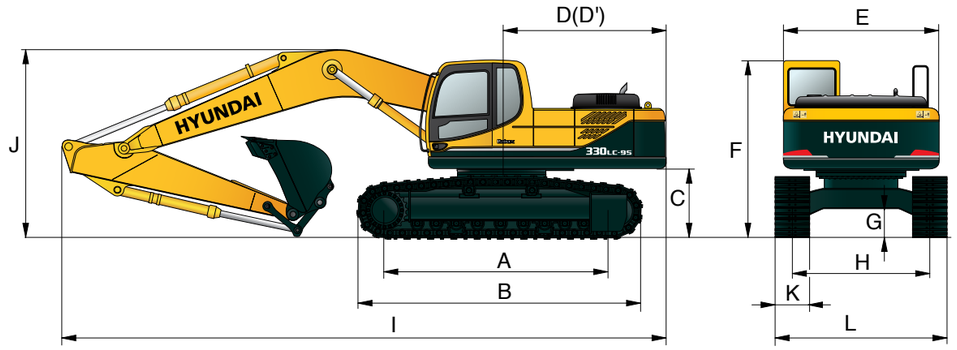

Unit : mm

A	Tumbler distance	R330LC-9S	4,030				
		R330NLC-9S	4,030				
B	Overall length of crawler		4,940				
C	Ground clearance of counterweight		1,200				
D	Tail swing radius		3,330				
D'	Rear-end length		3,265				
E	Overall width of upperstructure		2,980				
F	Overall height of cab		3,090				
G	Min. ground clearance		500				
H	Track gauge	R330LC-9S	2,680				
		R330NLC-9S	2,390				

Boom length	6,450				6,150
Arm length	2,200	2,500	3,200	4,050	2,200
I Overall length	11,230	11,100	10,980	10,980	10,930
J Overall height of boom	3,640	3,670	3,380	3,860	3,680

K Track shoe width		600	700	800	900
L Overall width	R330LC-9S	3,280	3,380	3,480	3,580
	R330NLC-9S	2,990	-	-	-

R330LC-9S / R330NLC-9S WORKING RANGE

Unit : mm

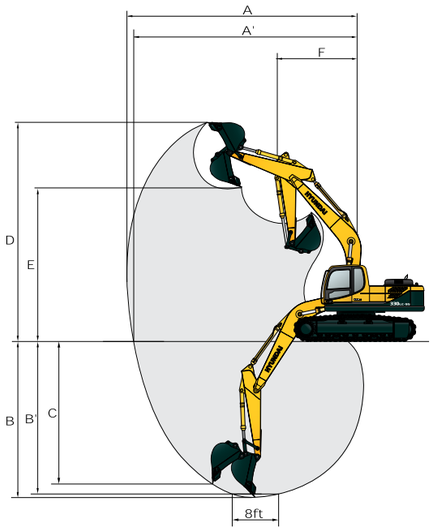

Boom length	6,450				6,150
Arm length	2,200	2,500	3,200	4,050	2,200
A Max. digging reach	10,330	10,550	11,140	11,950	10,020
A' Max. digging reach on ground	10,110	10,330	10,940	11,760	9,800
B Max. digging depth	6,370	6,670	7,370	8,220	6,160
B' Max. digging depth (8' level)	6,160	6,470	7,210	8,080	5,950
C Max. vertical wall digging depth	5,980	5,920	6,360	7,260	5,710
D Max. digging height	10,220	10,170	10,310	10,710	9,940
E Max. dumping height	7,050	7,050	7,240	7,630	6,780
F Min. swing radius	4,700	4,500	4,470	4,470	4,520

Dimensions & Working Range

R330LC-9S HIGH WALKER DIMENSIONS

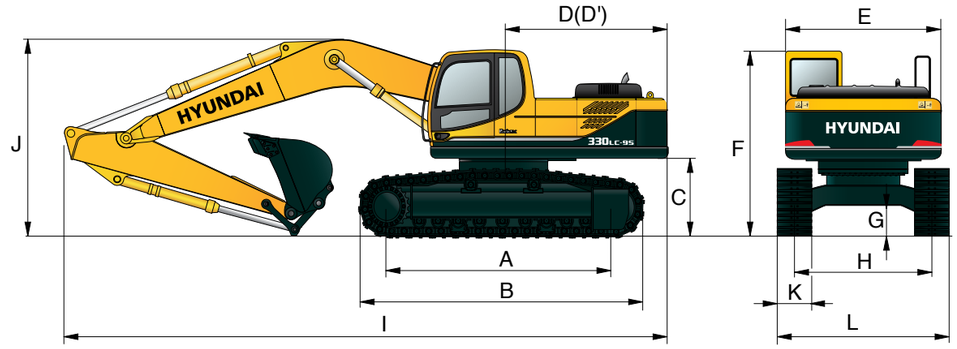

Unit : mm

A	Tumbler distance		4,030				
B	Overall length of crawler		4,940				
C	Ground clearance of counterweight		1,500				
D	Tail swing radius		3,330				
D'	Rear-end length		3,265				
E	Overall width of upperstructure		2,980				
F	Overall height of cab		3,390				
G	Min. ground clearance		765				
H	Track gauge		2,870				

Boom length	6,450				6,150
Arm length	2,200	2,500	3,200	4,050	2,200
I Overall length	11,220	11,100	10,910	11,000	10,920
J Overall height of boom	3,740	3,760	3,360	3,810	3,780

K Track shoe width	Type	Triple grouser			Double grouser
	Width	600	700	800	700
L Overall width		3,470	3,760	3,670	3,580

R330LC-9S HIGH WALKER WORKING RANGE

Unit : mm

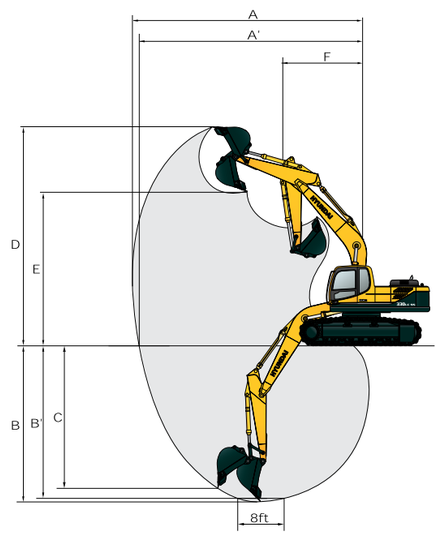

Boom length	6,450				6,150
Arm length	2,200	2,500	3,200	4,050	2,200
A Max. digging reach	10,330	10,550	11,140	11,950	10,020
A' Max. digging reach on ground	10,040	10,270	10,880	11,710	9,730
B Max. digging depth	6,100	6,400	7,100	7,950	5,880
B' Max. digging depth (8' level)	5,890	6,200	6,940	7,950	5,680
C Max. vertical wall digging depth	5,700	5,650	6,080	6,980	5,440
D Max. digging height	10,500	10,450	10,590	10,990	10,220
E Max. dumping height	7,330	10,450	7,520	7,910	7,060
F Min. swing radius	4,700	4,500	4,470	4,470	4,520

Lifting Capacity

R330LC-9S

Rating over-front Rating over-side or 360 degree

Boom : 6.45m / Arm : 2.5 m / Bucket : 1.44 m³ SAE heaped / Shoe : 600mm triple grouser

Load point height m		Load radius										At max. reach		
		3.0 m		4.5 m		6.0 m		7.5 m		9.0 m		Capacity		Reach
														m
7.5 m	kg											*6720	5040	8.34
6.0 m	kg							*7320	5980			6430	4100	9.19
4.5 m	kg			*11600	*11600	*9120	8430	*7930	5770			5740	3600	9.70
3.0 m	kg			*15130	12220	*10770	7870	8690	5490			5420	3360	9.92
1.5 m	kg			*17590	11360	12060	7390	8400	5240	6240	3860	5380	3310	9.88
Ground	kg			*18360	11070	11730	7110	8200	5060			5630	3470	9.57
-1.5 m	kg	*15010	*15010	*18010	11060	11630	7010	8130	4990			6280	3890	8.97
-3.0 m	kg	*22800	*22800	*16720	11240	11710	7090					7670	4800	7.98
-4.5 m	kg	*19110	*19110	*14080	11620	*10340	7380					*7300	7080	6.42

Boom : 6.45m / Arm : 3.2 m / Bucket : 1.44 m³ SAE heaped / Shoe : 600mm triple grouser

Load point height m		Load radius												At max. reach		
		1.5 m		3.0 m		4.5 m		6.0 m		7.5 m		9.0 m		Capacity		Reach
																m
7.5 m	kg									*5240	*5240			*5970	4370	9.06
6.0 m	kg									*6500	6100			5730	3620	9.84
4.5 m	kg							*8090	*8090	*7190	5850	*5440	4150	5160	3200	10.31
3.0 m	kg					*13400	12620	*9820	7990	*8110	5530	6390	3990	4880	2990	10.52
1.5 m	kg					*16400	11540	*11460	7430	8400	5220	6210	3830	4830	2930	10.48
Ground	kg			*10240	*10240	*17910	11010	11690	7060	8140	4990	6080	3710	5020	3040	10.19
-1.5 m	kg	*11380	*11380	*14470	*14470	*18150	10860	11490	6880	8010	4870			5500	3350	9.63
-3.0 m	kg	*15350	*15350	*19470	*19470	*17370	10940	11490	6880	8020	4800			6500	4010	8.74
-4.5 m	kg			*21820	*21820	*15410	11220	*11430	7060					*7480	5470	7.37
-6.0 m	kg					*11340	*11340									

Boom : 6.45m / Arm : 4.05 m / Bucket : 1.44 m³ SAE heaped / Shoe : 600mm triple grouser

Load point height m		Load radius												At max. reach		
		1.5 m		3.0 m		4.5 m		6.0 m		7.5 m		9.0 m		Capacity		Reach
																m
7.5 m	kg													*5250	3640	10.00
6.0 m	kg											*4530	4380	4940	3080	10.71
4.5 m	kg									*6270	6000	*5750	4250	4500	2750	11.13
3.0 m	kg			*18220	*18220	*11250	*11250	*8610	8250	*7280	5660	6460	4060	4280	2570	11.32
1.5 m	kg			*10440	*10440	*14750	12000	*10470	7630	*8360	5310	6240	3860	4230	2520	11.29
Ground	kg			*10810	*10810	*17060	11210	11810	7150	8180	5020	6060	3690	4360	2590	11.03
-1.5 m	kg	*9850	*9850	*13390	*13390	*18030	10860	11490	6880	7980	4830	5950	3580	4700	2810	10.52
-3.0 m	kg	*13020	*13020	*16980	*16980	*17900	10800	11380	6780	7900	4770	5930	3570	5390	3270	9.72
-4.5 m	kg	*16670	*16670	*21800	*21800	*16680	10950	11460	6850	7980	4840			6760	4180	8.53
-6.0 m	kg			*20030	*20030	*13950	11330	*10120	7130					*6790	6430	6.71

Lifting Capacity

R330LC-9S

Rating over-front Rating over-side or 360 degree

Boom : 6.45m / Arm : 2.5 m / Bucket : 1.44 m³ SAE heaped / Shoe : 800mm triple grouser

Load point height m		Load radius										At max. reach		
		3.0 m		4.5 m		6.0 m		7.5 m		9.0 m		Capacity		Reach
														m
7.5 m	kg											*6720	5190	8.34
6.0 m	kg							*7320	6150			6630	4230	9.19
4.5 m	kg			*11600	*11600	*9120	8660	*7930	5940			5930	3720	9.70
3.0 m	kg			*15130	12550	*10770	8090	*8770	5660			5600	3480	9.92
1.5 m	kg			*17590	11700	*12210	7610	8660	5400	6440	4000	5570	3440	9.88
Ground	kg			*18360	11400	12100	7330	8470	5230			5820	3590	9.57
-1.5 m	kg	*15010	*15010	*18010	11400	11990	7240	8400	5160			6490	4030	8.97
-3.0 m	kg	*22800	*22800	*16720	11570	12070	7310					7910	4960	7.98
-4.5 m	kg	*19110	*19110	*14080	11950	*10340	7600					*7300	7290	6.42

Boom : 6.45m / Arm : 3.2 m / Bucket : 1.44 m³ SAE heaped / Shoe : 800mm triple grouser

Load point height m		Load radius												At max. reach		
		1.5 m		3.0 m		4.5 m		6.0 m		7.5 m		9.0 m		Capacity		Reach
																m
7.5 m	kg									*5240	*5240			*5970	4500	9.06
6.0 m	kg									*6500	6270			5910	3740	9.84
4.5 m	kg							*8090	*8090	*7190	6020	*5440	4290	5330	3320	10.31
3.0 m	kg					*13400	12950	*9820	8210	*8110	5700	6590	4130	5050	3100	10.52
1.5 m	kg					*16400	11870	*11460	7660	8660	5390	6420	3970	5010	3050	10.48
Ground	kg			*10240	*10240	*17910	11350	12060	7280	8410	5160	6280	3840	5190	3160	10.19
-1.5 m	kg	*11380	*11380	*14470	*14470	*18150	11200	11850	7110	8270	5040			5690	3480	9.63
-3.0 m	kg	*15350	*15350	*19470	*19470	*17370	11280	11850	7110	8280	5050			6710	4150	8.74
-4.5 m	kg			*21820	*21820	*15410	11560	*11430	7290					*7480	5640	7.37
-6.0 m	kg					*11340	*11340									

Boom : 6.45m / Arm : 4.05 m / Bucket : 1.44 m³ SAE heaped / Shoe : 800mm triple grouser

Load point height m		Load radius												At max. reach		
		1.5 m		3.0 m		4.5 m		6.0 m		7.5 m		9.0 m		Capacity		Reach
																m
7.5 m	kg													*5250	3760	10.00
6.0 m	kg											*4530	4520	5110	3190	10.71
4.5 m	kg									*6270	6170	*5750	4380	4660	2850	11.13
3.0 m	kg			*18220	*18220	*11250	*11250	*8610	8480	*7280	5820	*6530	4190	4440	2670	11.32
1.5 m	kg			*10440	*10440	*14750	12330	*10470	7850	*8360	5480	6450	3990	4390	2620	11.29
Ground	kg			*10810	*10810	*17060	11540	*11950	7380	8440	5190	6270	3820	4520	2700	11.03
-1.5 m	kg	*9850	*9850	*13390	*13390	*18030	11190	11860	7100	8240	5000	6150	3720	4870	2930	10.52
-3.0 m	kg	*13020	*13020	*16980	*16980	*17900	11130	11750	7000	8160	4930	6140	3710	5570	3390	9.72
-4.5 m	kg	*16670	*16670	*21800	*21800	*16680	11280	11830	7080	8240	5010			6980	4320	8.53
-6.0 m	kg			*20030	*20030	*13950	11670	*10120	7360					*6790	6630	6.71

1. Lifting capacity is based on SAE J1097, ISO 10567.
2. Lifting capacity of the Robex Series does not exceed 75% of the tipping load with the machine on firm, level ground or 87% of full hydraulic capacity.
3. The load point is a hook located on the back of the bucket.
4. (*) indicates the load limited by hydraulic capacity.

Lifting Capacity

R330NLC-9S

Rating over-front Rating over-side or 360 degree

Boom : 6.45m / Arm : 2.5 m / Bucket : 1.44 m³ SAE heaped / Shoe : 600mm triple grouser

Load point height m		Load radius										At max. reach		
		3.0 m		4.5 m		6.0 m		7.5 m		9.0 m		Capacity		Reach
														m
7.5 m	kg											*6720	4240	8.34
6.0 m	kg							*7320	5050			6390	3410	9.19
4.5 m	kg			*11600	11300	*9120	7100	*7930	4840			5700	2960	9.70
3.0 m	kg			*15130	10060	*10770	6560	8630	4570			5380	2740	9.92
1.5 m	kg			*17590	9250	11980	6100	8350	4320	6190	3160	5340	2690	9.88
Ground	kg			*18360	8980	11660	5830	8150	4150			5590	2820	9.57
-1.5 m	kg	*15010	*15010	*18010	8970	11550	5740	8080	4080			6230	3180	8.97
-3.0 m	kg	*22800	18590	*16720	9130	11640	5810					7620	3960	7.98
-4.5 m	kg	*19110	*19110	*14080	9490	*10340	6090					*7300	5910	6.42

Boom : 6.45m / Arm : 3.2 m / Bucket : 1.44 m³ SAE heaped / Shoe : 600mm triple grouser

Load point height m		Load radius												At max. reach		
		1.5 m		3.0 m		4.5 m		6.0 m		7.5 m		9.0 m		Capacity		Reach
																m
7.5 m	kg									*5240	*5240			*5970	3650	9.06
6.0 m	kg									*6500	5160			5690	2990	9.84
4.5 m	kg							*8090	7260	*7190	4910	*5440	3440	5120	2610	10.31
3.0 m	kg					*13400	10430	*9820	6670	*8110	4600	6340	3280	4850	2410	10.52
1.5 m	kg					*16400	9410	*11460	6140	8340	4310	6170	3120	4800	2360	10.48
Ground	kg			*10240	*10240	*17910	8920	11620	5780	8090	4080	6030	3000	4980	2440	10.19
-1.5 m	kg	*11380	*11380	*14470	*14470	*18150	8780	11410	5610	7950	3960			5460	2710	9.63
-3.0 m	kg	*15350	*15350	*19470	17990	*17370	8850	11410	5610	7960	3970			6450	3280	8.74
-4.5 m	kg			*21820	18520	*15410	9110	*11430	5780					*7480	4520	7.37
-6.0 m	kg					*11340	9660									

Boom : 6.45m / Arm : 4.05 m / Bucket : 1.44 m³ SAE heaped / Shoe : 600mm triple grouser

Load point height m		Load radius												At max. reach		
		1.5 m		3.0 m		4.5 m		6.0 m		7.5 m		9.0 m		Capacity		Reach
																m
7.5 m	kg													*5250	3010	10.00
6.0 m	kg											*4530	3660	4910	2510	10.71
4.5 m	kg									*6270	5060	*5750	3530	4470	2210	11.13
3.0 m	kg			*18220	*18220	*11250	11040	*8610	6930	*7280	4720	6410	3340	4250	2050	11.32
1.5 m	kg			*10440	*10440	*14750	9840	*10470	6320	*8360	4390	6200	3150	4200	2000	11.29
Ground	kg			*10810	*10810	*17060	9090	11730	5870	8130	4110	6020	2980	4330	2050	11.03
-1.5 m	kg	*9850	*9850	*13390	*13390	*18030	8760	11420	5600	7920	3930	5900	2880	4670	2240	10.52
-3.0 m	kg	*13020	*13020	*16980	*16980	*17900	8710	11310	5510	7840	3860	5890	2870	5350	2630	9.72
-4.5 m	kg	*16670	*16670	*21800	18000	*16680	8850	11390	5580	7920	3930			6710	3410	8.53
-6.0 m	kg			*20030	18700	*13950	9210	*10120	5850					*6790	5340	6.71

Lifting Capacity

R330LC-9S HIGH WALKER

Rating over-front Rating over-side or 360 degree

Boom : 6.45m / Arm : 2.5 m / Bucket : 1.44 m³ SAE heaped / Shoe : 600mm triple grouser

Load point height m		Load radius										At max. reach		
		3.0 m		4.5 m		6.0 m		7.5 m		9.0 m		Capacity		Reach
														m
7.5 m	kg											*6730	5630	8.53
6.0 m	kg							*7410	6920			*6840	4700	9.31
4.5 m	kg			*12260	*12260	*9420	*9420	*8070	6690			6250	4210	9.76
3.0 m	kg			*15720	14150	*11070	9100	*8930	6400	7000	4710	5970	4000	9.93
1.5 m	kg			*17850	13390	*12430	8650	9190	6150	15430	10380	5990	3990	9.84
Ground	kg			*18370	13170	12850	8400	9020	5990			6330	4220	9.48
-1.5 m	kg	*16360	*16360	*17850	13200	12780	8330	8970	5950			7140	4780	8.82
-3.0 m	kg	*22580	*22580	*16360	13410	*12250	8440					*7890	5990	7.75
-4.5 m	kg	*18050	*18050	*13340	*13340									

Boom : 6.45m / Arm : 3.2 m / Bucket : 1.44 m³ SAE heaped / Shoe : 600mm triple grouser

Load point height m		Load radius												At max. reach		
		1.5 m		3.0 m		4.5 m		6.0 m		7.5 m		9.0 m		Capacity		Reach
																m
7.5 m	kg											*5730	*5730			*5990	4920	9.24
6.0 m	kg											*6600	*6600			*6130	4180	9.95
4.5 m	kg									*8400	*8400	*7350	6760	*5820	4880	5660	3770	10.37
3.0 m	kg							*14050	*14050	*10150	9210	*8290	6430	7030	4710	5420	3580	10.53
1.5 m	kg							*16800	13530	*11720	8680	*9210	6130	6860	4550	5420	3560	10.45
Ground	kg					*10990	*10990	*18040	13080	*12750	8330	8980	5920	6740	4440	5670	3720	10.11
-1.5 m	kg	*12090	*12090	*15330	*15330	*18080	12980	12670	8190	8870	5820					6270	4140	9.50
-3.0 m	kg	*16150	*16150	*20540	*20540	*17110	13090	*12630	8220	8910	5850					7510	5000	8.53
-4.5 m	kg			*20940	*20940	*14870	13430	*10980	8450							*7390	6990	7.03

Boom : 6.45m / Arm : 4.05 m / Bucket : 1.44 m³ SAE heaped / Shoe : 600mm triple grouser

Load point height m		Load radius												At max. reach		
		1.5 m		3.0 m		4.5 m		6.0 m		7.5 m		9.0 m		Capacity		Reach
																m
7.5 m	kg											*3030	*3030	*5280	4150	10.16
6.0 m	kg											*4770	*4770	5370	3600	10.81
4.5 m	kg									*6440	*6440	*5980	4970	4950	3270	11.19
3.0 m	kg			*20040	*20040	*11950	*11950	*8970	*8970	*7490	6560	*6650	4770	4750	3110	11.33
1.5 m	kg			*10150	*10150	*15290	13960	*10790	8860	*8550	6210	6870	4570	4740	3090	11.26
Ground	kg	*7400	*7400	*11200	*11200	*17340	13230	*12170	8410	8970	5940	6690	4410	4920	3200	10.95
-1.5 m	kg	*10420	*10420	*13990	*13990	*18090	12940	12600	8160	8790	5770	6590	4320	5350	3500	10.39
-3.0 m	kg	*13660	*13660	*17770	*17770	*17760	12920	12530	8100	8740	5720			6190	4090	9.53
-4.5 m	kg	*17430	*17430	*22910	*22910	*16310	13120	*12000	8200	8860	5830			*7060	5280	8.25
-6.0 m	kg			*18860	*18860	*13180	*13180	*9410	8550							

1. Lifting capacity is based on SAE J1097, ISO 10567.
2. Lifting capacity of the Robex Series does not exceed 75% of the tipping load with the machine on firm, level ground or 87% of full hydraulic capacity.
3. The load point is a hook located on the back of the bucket.
4. (*) indicates the load limited by hydraulic capacity.