디지털 4K DVR

UHD1604F-R



디지털 I IP I 4M QHD I 4K UHD I TDM RX

주요 특징

- 최대 16채널(2M), 8채널(4M), 4채널(4K UHD) 지원
- TDM 비디오 지원
- 4K UHD(HDMI) 출력 지원
- 내부 HDD 6개 장착 가능
- 외부 저장장치 128TB(eSATA), 256TB(NS04R) 지원
- 실시간 스트리밍(RTSP) 지원
- 서비스 채널, 원격 DVR 지원
- VMS(Control Center), 모바일 앱, HTML5 지원

외형도

(445×418×88mm)

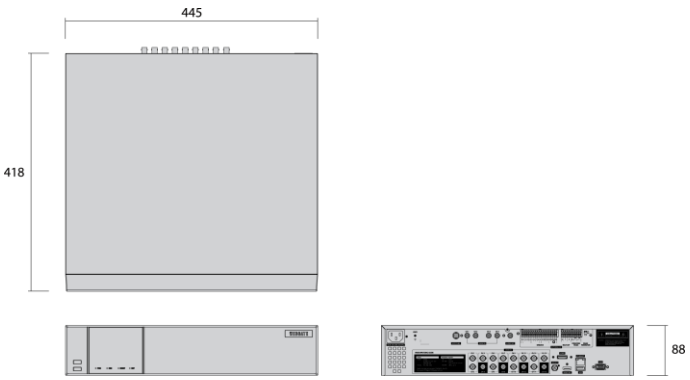

Tech Note

4K UHD 초고화질로 더 선명하고 생생하게

초고화질의 4K UHD 해상도로 더 넓은 영역의 감시와 원거리 이미지의 확대도 자유롭고 깨끗하게!
Full-HD 보다 2배 더 선명한 4M QHD, 4배 더 선명한 4K UHD 해상도의 영상까지 저장 가능한 DVR

TDM(Time Division Multiplexer) 단일 케이블로 8채널 까지 전송

TDM(EX-SDI) RX 내장으로 단일 케이블을 통해 최대 8채널 까지 수신

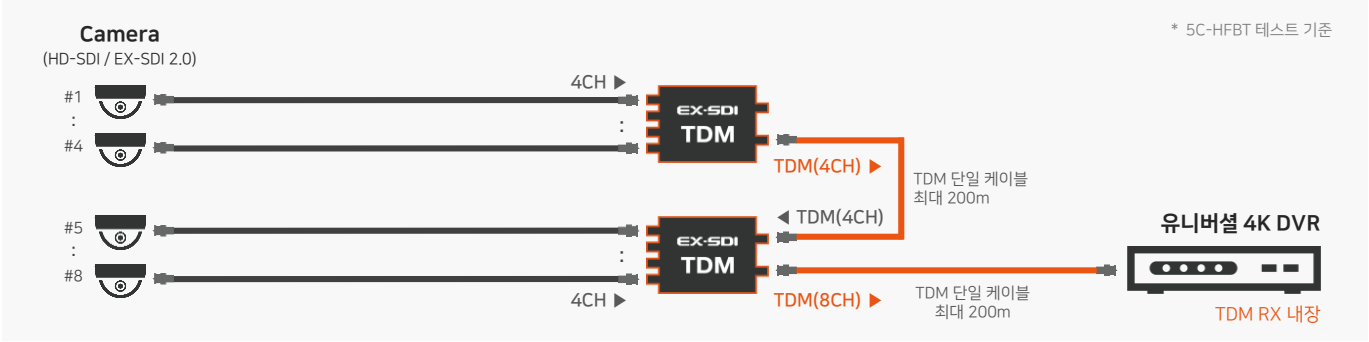

디지털 4K DVR

UHD1604F-R



VIDEO INPUT		
Video input Format	BNC	HD-SDI, EX-SDI(V1.0, V2.0, V2.1), TDM
	IP(Ethernet)	Onvif, WESP
Resolution / Frame Rate	HD-SDI EX-SDI 1.0 EX-SDI 2.0 EX-SDI 2.1	1920×1080@30fps 2560×1440@30fps 3840×2160@30fps
	EX-SDI TDM	1920×1080@30fps
Connectors		16ch, 75Ω BNC connector
UCC		Upstream Communication Channel @EX-SDI(2M, 4M)
VIDEO OUTPUT		
Video output	Resolution	HDMI : 3840×2160, 1920×1080 VGA : 1920×1080, 1280×1024, 1024×768 800×600 BNC(EX-SDI) : 1920×1080 BNC(CVBS) : 720×480, 720×576
	Mode	HDMI/VGA Main + CVBS Spot HDMI/SDI Main + CVBS Spot HDMI Main + VGA Spot + CVBS Spot HDMI Main + SDI Spot + CVBS Spot
	BNC(CVBS)	1, 4, 9, 16 split-screen, Switching
	BNC(SDI)	Main : Same as HDMI output Spot : 1, 4, 9, 16 split-screen, Switching Format : HD-SDI, EX-SDI, EX-SDI 2.0
RECORDING		
Compression	H.264 / JPEG	
Resolution	3840×2160, 2560×1440, 1920×1080, 1280×720, 960×480	
Rate	Max. 480fps@1920×1080, Max. 240fps@2560×1440 Max. 120fps@3840×2160	
Quality	10 levels up to 8Mbps@2M, 12Mbps@4M, 16Mbps@8M(4K)	
Mode	Normal/Event Record, Schedule/Event Record, Emergency Record	
Schedule	24hrs / 7days	
PLAYBACK		
Mode	Instant Playback / Search	
Speed	Max. 480fps@1920×1080 Max. 240fps@2560×1440 Max. 120fps@3840×2160	
Search type	Date/Time, Calendar/Time-line, Event, Thumbnail(Interval/Motion), Text, Bookmark	
Block playback	24hours ~ 99days	
EVENT & ALARM		
Event source	MD(Motion Detection), Sensor, Text, Video Loss	
Event check Schedule	24hrs / 7days	
Event action	Relay, Buzzer, E-mail, FTP, Video pop-up, Camera Preset, Mobile Alarm Push	
MD area	15×10	
Text input	POS/ATM support, AVE VSI Pro/Hydra support	
SYSTEM ALARM		
Alarm source	HDD fail, HDD almost full, Password fail, WRS fail, Record Fail	
Alarm action	Warning message, Buzzer, E-mail, Relay, Mobile Alarm Push	
AUDIO		
Input/output	4 RCA input / HDMI & RCA output	
Compression	ADPCM (32Kbps, 8KHz, 16bit sampling)	
Direction	Both	

PTZ	
Protocols	HIK-C, AHD, C1080(D1080), C1080PT-Z20, Pelco-D, Pelco-P, Samsung, Panasonic and others
NETWORK	
Interface	1 Gigabit Ethernet (10/100/1000Mbps)
Type	Static IP, Dynamic IP, xDSL
DDNS	WNS, DynDNS, NoIP, WRS
Bandwidth limit	0.01 ~ 100Mbps, unlimited
NTP	Server / Client / Both
Users	10 Monitoring, 4 Playback
RTSP	Supported
UPnP	UPnP auto port forwarding
Streaming	H.264 stream, High resolution 1 additional H.264 stream, Normal resolution 1 JPEG stream, Normal resolution
Service Streaming	Service Channel or Remote DVR
SECURITY	
User level	1 admin, 10 users
User privilege	Menu, PTZ, Relay, Playback, Power, Copy, Network MIC
IP filtering	Supported
STORAGE & BACKUP	
Storage devices	6 internal SATA HDDs, 1 external eSATA Interface, Gigabit network for NS04R
RAID Level	External storage including NS04R(Level 1/5/10)
File system	Proprietary file system, Data-loss protection against power-failure
Capacity	Max. 128TB with eSATA, Max. 256TB with cascaded NS04R 8TB HDD Supported
Backup type	Multi-channel exe file, Single channel avi file, JPEG(Capture)
Backup device	3 USB 2.0 drive (2 front, 1 rear)
S.M.A.R.T.	Temperature and Health checking
SERIAL & I/O	
Serial port	2 RS-485
Sensor input	16 Dry-contacts
Relay output	2 Relays
CONTROLLER	
Device	IR remote controller, Joystick Keyboard, Mouse
SOFTWARE	
WebViewer	Plug-in free HTML5 WebViewer for Chrome, Safari, Mac OS X ActiveX WebViewer for IE
Mobile App	Monitoring / Playback / Alarm Push / PTZ / Audio / Log View with iPhone & Android
CMS	Control Center, Max. 1024 units
SDK	ActiveX(COM) SDK
ENVIRONMENTAL & PHYSICAL	
Dimension	445(W) × 418(D) × 88(H) mm
Weight	6 Kg (No HDD)
Operating Temperature	5°C~45°C (41°F ~ 113°F)
Operating Humidity	80% below, free of condensation
Power	AC free volt (100~240VAC), 50/60Hz
Power Consumption	Max. 27W, Typical 22W(No HDD)
Approval	KC, FCC, CE, RoHS

* 제품의 사양은 성능 및 품질 향상을 위해 사전 예고없이 변경 될 수 있습니다.