FPS200M

Fast Piezo Shutter

www.cedrat-technologies.com | actuator@cedrat-tec.com

APPLICATIONS

- X-Ray Shutter for Synchrotron beamlines

KEY FEATURES

- UHV compatibility
- Lifetime: > 100 million cycles
- High repeatability
- Low jitter: < 100 µs
- Tungsten teeth
- Shutter status feedback (Open/Close) with Strain Gauge (SG) sensors
- Remote control of the shutter with RS422 link (option RS422)

RELATED PRODUCTS

- Amplifier SP75-2 for ON/OFF
- Strain gauge conditioner SG75-1
- Rack RK42F3U-LC75B
- Vacuum box with KF40 interface

AVAILABLE OPTIONS

- UHV compatibility

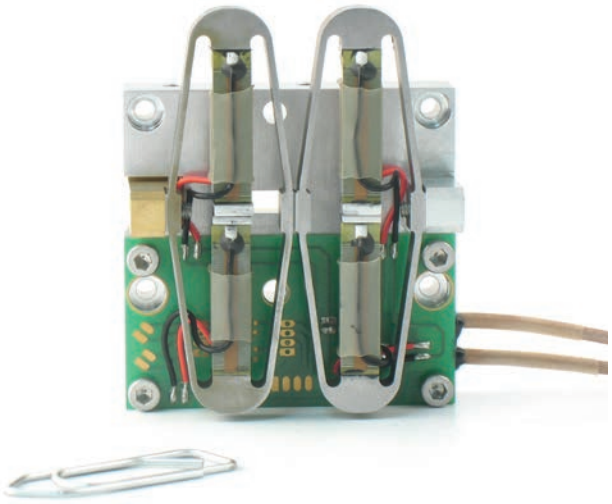

NON CONTRACTUAL PICTURE

PARAMETER	TYPICAL VALUE	UNIT
Max. beam diameter	0.30	mm
Aperture & closing time	2	ms
Voltage range	-20 ... 150	V
Capacitance (per electrical port)	3.2	µF
Slits material	Tungsten	-
Slits depth	2.4	mm
Dimensions (X×Y×Z)	60×44×21	mm
Mass	84	g

See 2D Configuration on page 2

Copyright © CEDRAT TECHNOLOGIES | 12/2021

www.cedrat-technologies.com | actuator@cedrat-tec.com

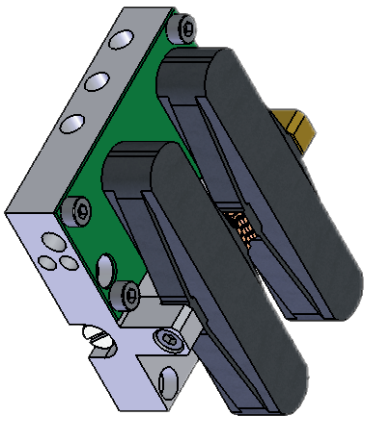

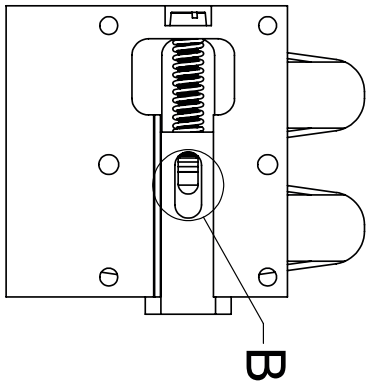

DÉTAIL B
ECHELLE 2 : 1

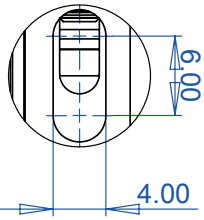

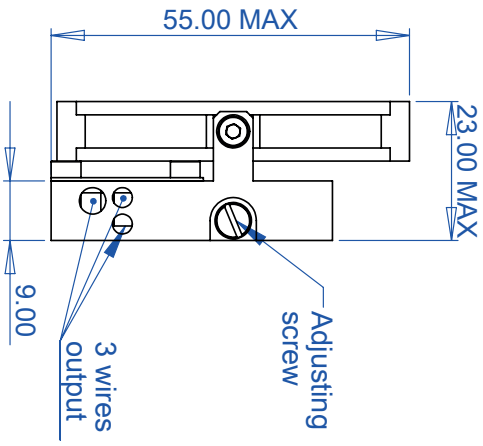

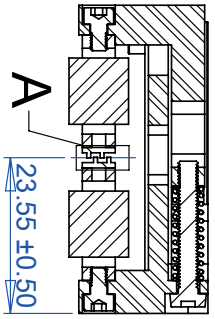

COUPE A-A

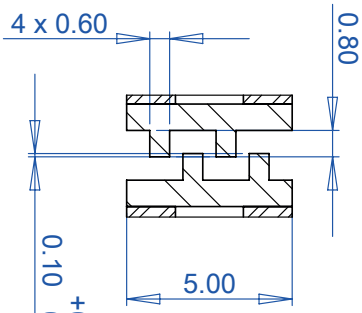

DÉTAIL A
ECHELLE 5 : 1
In closed position

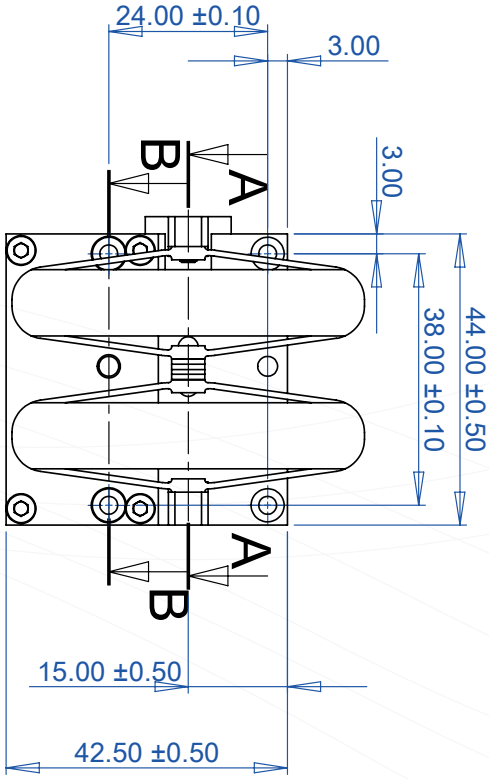

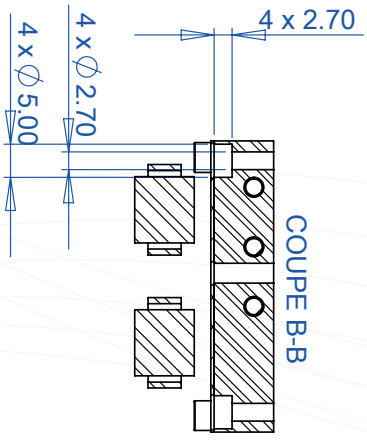

COUPE B-B

Matière / Material			
Traitement / Treatment			
Finition / Finish			
Tolérances générales / General Tolerances			
Longueur / Length ±0.10 mm	Angles ±0.5°		
Dessiné par / Drawn by fbourgain	Date 22/04/2020		
Masse 150 g			
Référence / Révision 011176 / A.03			
Titre / Title Pass FPS200M 01_SIW			
CEDRAT TECHNOLOGIES Innovation in Mechatronics			
CONFIDENTIEL INDUSTRIE Ce document est la propriété de CEDRAT TECHNOLOGIES. Ne peut être communiqué sans autorisation écrite.			
Format A4	Echelle/Scale 1:1	Page 1/1	

Copyright © CEDRAT TECHNOLOGIES | 12/2021