Product Brochure

June 2015

Anritsu

X-ray Inspection System



XR75

A.L.L.

ADVANCED LONG LIFE TECHNOLOGY

Introducing the next generation

XR75

A.L.L.

ADVANCED LONG LIFE TECHNOLOGY



# of X-ray inspection technology

Introducing Anritsu's Advanced Long Life Technology



Anritsu's new X-ray technology exceeds the needs of today's demanding food processing industry. In addition to contaminant detection the XR75 Inspection System can identify product shape defects and packaging integrity.
Superior image processing allows the Processor to see what they may have been missing in previous X-ray system designs.
The highly engineered high sensitivity X-Ray generator and sensor provide outstanding sensitivity at lower energy levels. The result is superior performance, extended life of cycles and reduced true cost of ownership.
The low output X-ray generator reduces heat generation, eliminating the need for cooling system, resulting in a 30% reduction in power counsumption.
The Anritsu XR75 X-ray Inspection System can reduce the lifetime operating cost by over 20%, as compared to other systems, making X-Ray inspection more affordable to purchase, own and operate.

*1) Comparison with conventional models with air-conditioner. *2) It is the estimated value by Anritsu and may vary depending on the condition of machines.

A.L.L.
ADVANCED LONG LIFE TECHNOLOGY

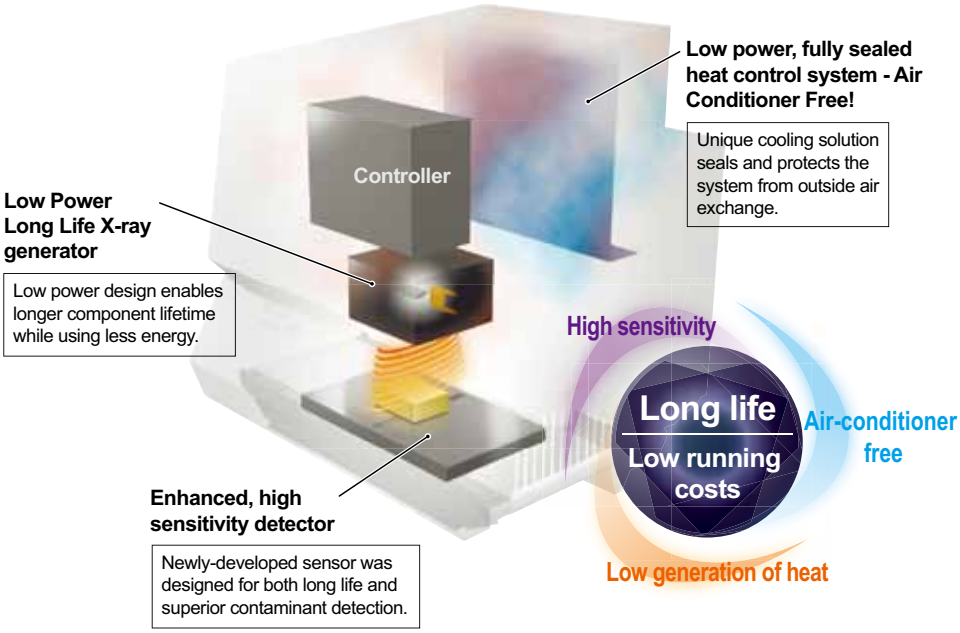

Easy to operate



Simple step-by-step product setup

Product Registration Navigation simplifies parameter setting procedures with step-by step illustrated instructions.







Simple maintenance

【Easy parts removal】 No tools are required for removing/attaching the conveyor belts and rollers including front cover and X-ray leakage prevention curtain.

【Easy-to-clean design】 The system's angled surfaces prevent water from accumulating after system cleaning.



Tool Free belt removal



Sloped surfaces for water run-off.

Simple information management

X-ray images and inspection logs can be saved to the USB memory for HACCP compliance. All Anritsu systems can be connected, via Ethernet, to QuiCCA. QuiCCA provides line status information, centralized reporting and data storage.



USB interface
(USB memory is optional)



Overall quality management and control system - QUICCA


Pasta

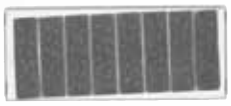
Cookie


Chocolate

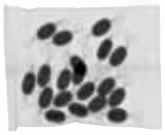
Candy


Instant beverage

XR75 delivers industry leading detection for all products.


Asparagus


Syringe


Plastic cup


Tube


Sliced meat


Sausage


Prawn

☑ HD imaging provides the best-in-industry detection.

Signal processing that picks up only signals for contaminants accurately and image analysis algorithm have been developed numerously by our unique technology. Contaminants such as bone fragments and resins are detected at high sensitivity by using the appropriate algorithm according to physical properties of products and property of packages.



Point

【Easy to adjust sensitivity】

An X-ray processed image and a projection monitor on which detection signals are shown graphically are spotted vertically on the screen. The detection limit value can be easily adjusted.

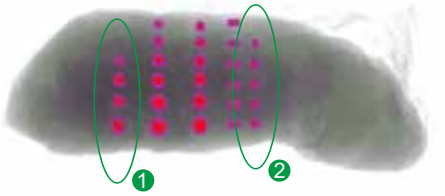

X-ray image of test pieces in 500g tenderloin. Accurate detection of small Nylon ❶ and SUS ❷ spheres is now possible.

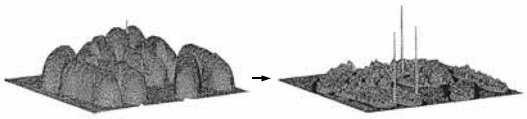

Signal processing advancements allow detection of smaller contaminants.

☑ Go Beyond Contaminant Detection

XR75 provides not only contaminant detection but also product verfication simultaneously. Products can be inspected for missing product, virtual weight, count, package check, void check, etc.

【Shape Detection】 The shape, area and mass are analyzed from x-ray images to find irregularities including breaks and chips. Missing fillings can also be spotted.

【Missing Product Detection】 Inspection for missing products are available for those products in which the content is indicated by the number, and the mass of each piece in a package varies per piece.


Chipped biscuit

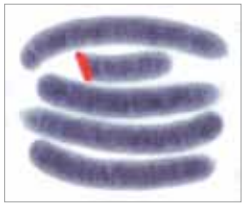
Cut sausage

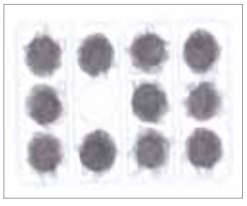

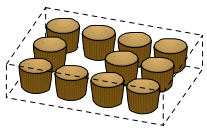

[Example of a package containing 12 cupcakes with 20 ±2 g each]
The weight of 11 pieces with 22 g each totals 242 g, which satisfies weight requirement but the count is short.

Safety in design

Anritsu believes customer safety is of utmost importance.

Anritsu safety mechanism

Emergency stop switch
Cuts power to x-ray and drive circuits, stops the conveyor and x-ray radiation.

X-ray ON/OFF key
Turning the key to OFF stops x-ray radiation completely.

X-ray shield cover open/close sensor
Opening the cover stops X-ray radiation.

X-ray shield cover
Opened/Closed using x-ray Irradiation ON/OFF Key.
Opening the cover stops x-ray radiation due to the x-ray Shield Cover Open/Close Sensor.

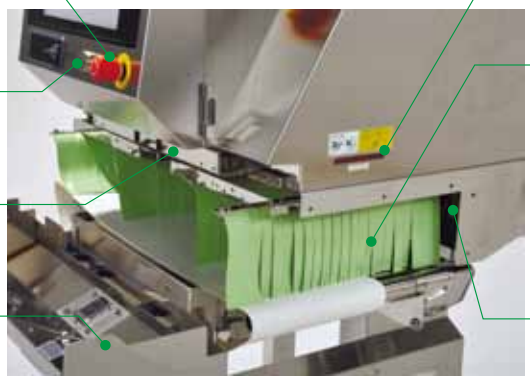

X-ray irradiation display
The lamp is lit during x-ray radiation.

Leakage prevention curtain
Prevents x-ray leakage. For unpackaged or bulk products, the standard lead impregnated curtains are replaced with SUS plates and covers - preventing direct food contact with the curtains.

Hand insertion sensor
Interrupting the sensor for a certain period of time stops x-ray radiation.

Safety management

X-ray Inspection System has been designed to fully satisfy the safe operation. However, to ensure even higher safety, use the safety procedures outlined below.

❶ Periodic measurement and recording of x-ray leakage data

❷ Management of operator working hours

❸ Additional safety measures

Covers may need to be mounted on upstream and downstream conveyors instead of the shield curtains, depending on the shape, weight, and package of products.

❹ No disassembly or modification

NEVER modify or disassemble the main unit, covers, x-ray leakage prevention curtains, safety covers, safety interlocks, etc., otherwise the x-ray leak-proof design may no longer be functional.

Safety of inspected products

WHO concluded in 1980 that the “irradiation of any food commodity up to an overall average dose of 10 kGy presents no toxicological hazard and introduces no special nutritional or microbiological problems.”
The maximum dose of x-ray irradiation to the products to be inspected by our x-ray inspection systems is 0.002 Gy, which is much lower than the value described above. Even if a product stops inside, the x-ray dose is always kept to 0.1 Gy or less.

Note: Follow the local laws and regulations regarding the installation and use of the x-ray inspection systems.

Major specifications

XR75



External Dimensions

KXS7522AWCLE
KXS7522AVCLE

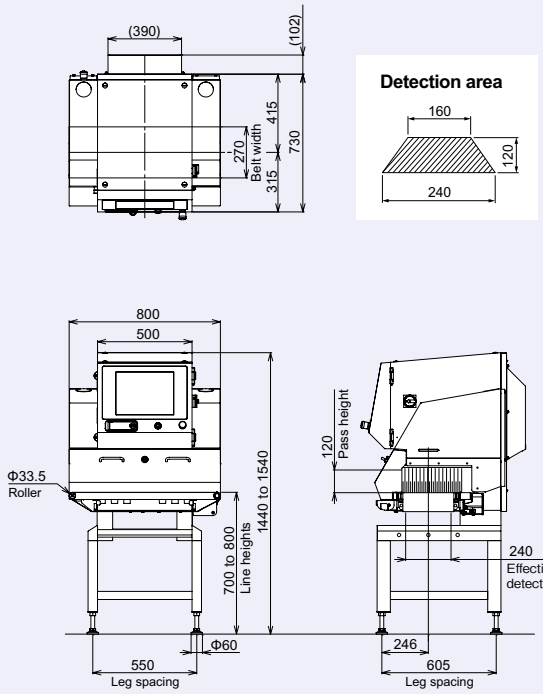

KXS7534AWCLE
KXS7534AVCLE

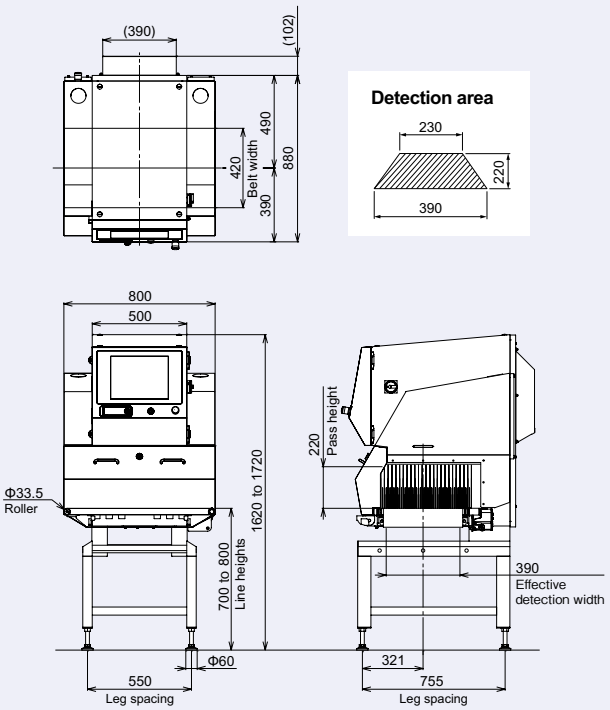

Dimensions in brackets are AVCLE type with waterproof on the entire surface. Units: mm

Specifications

Model	KXS7522AWCLE	KXS7522AVCLE	KXS7534AWCLE	KXS7534AVCLE
X-ray output	Tube voltage 30 to 80 kV, tube current 0.4 to 3.3 mA, output 12 to 100 W			
Safety	X-ray leakage maximum 1.0 μSv/h or less, prevention of X-ray leakage by safety devices			
Display	15-inch color TFT LCD			
Operation method	Touch panel (with touch buzzer)			
Product size [1, 2]	Maximum width 240 mm, maximum height 120 mm		Maximum width 390 mm, maximum height 220 mm	
Belt width	270mm		420mm	
Preset memory	200			
Belt speed [3] / Maximum product weight [4]	10 to 60 m/min, maximum 5 kg		10 to 60 m/min, maximum 5 kg	
	60 to 90 m/min, maximum 2 kg		—	
	10 to 40 m/min, maximum 10 kg (optional)		10 to 40 m/min, maximum 10 kg (optional)	
Power requirements [5]	100 to 240 AC, single phase, 50/60 Hz, 700 VA or less (standard)			
Mass [6]	250kg	255kg	305kg	310kg
Environmental conditions [7]	Temperature: 0° to 35°C, Relative humidity: 30 to 85 %, non-condensing			
Protection class	Conveyor: IP66 Other parts: IP40	Entire surface conforms to IP66	Conveyor: IP66 Other parts: IP40	Entire surface conforms to IP66
Exterior	Stainless steel (SUS304)			

1 : The detectable area is shown above.
2 : The entrance and exit may require covers depending on the length of a product.
3 : Variable depending on Product No.
4 : Sum total of product weight on the conveyor.
5 : Allowable power fluctuation range is ± 10%.
6 : Mass without option
7 : Belt speed and maximum product weight are restricted at the temperature between 30°C and 35°C.

Anritsu

Anritsu Industrial Solutions Co., Ltd.

ISO14001 CERTIFICATE No.JQA-EM0210
ISO 9001 CERTIFICATE No.JQA-0566

© ANRITSU INDUSTRIAL SOLUTIONS CO., LTD. 2015

INTERNATIONAL SALES DEPARTMENT
5-1-1 Onna, Atsugi-shi, Kanagawa-Prf., 243-0032, JAPAN
TEL: +81−46−296−6699 FAX: +81−46−225−8387
http: //www.anritsu-industry.com/en/

Anritsu Industrial Solutions (Shanghai) Co., Ltd.
3F, No.55, Lane 1505, Zuchongzhi Road, Zhangjiang Hi-tech Park, Pudong New Area, Shanghai 201203, P.R.China
TEL: +86−21−5046−3066 FAX: +86−21−5046−3068

Anritsu Industrial Solutions USA Inc.
1001 Cambridge Drive Elk Grove Village, IL 60007-2453, USA
TEL: +1−847−419−9729 FAX: +1−847−537−8266

Anritsu Industrial Solutions Europe Ltd.
Unit H, Smiths Road, Saxon Business Park, Stoke Prior, Bromsgrove, Worcestershire, B60 4AD, United Kingdom
TEL: +44−(0)845−539−9729 FAX: +44−1527−571−726

- Some products shown in this catalog may not be available in your country or region. Contact our sales representatives for details.
- To ensure proper operation, read the Operation Manual before using the machine.
- In addition to daily inspection, an annual maintenance check should be carried out.

Specifications are subject to change without notice.
No part of this catalog may be reproduced without our permission.

Printed on Recycled Paper

CAT. NO. K3231-A-1

2015-6 10 (ddc/E) Printed in Japan