surgeZERO : Class I / SZK12.5/50-XXX



▲ 1P2W



▲ 3P3W



▲ 3P4W

- LED 동작상태 표시 기능
- Mov Fault Alarm 기능
- RS-485 통신 기능
- 서지 카운터 기능 (Option)

- LED indicators for fault and Power
- Remote contact
- RS-485 Communication
- Surge counter (Option)

Technical data

Model		SZK12.5/50-XXX		
Electrical characteristics		220S	440D	380Y
Max. continuous operating voltage	U_C	275V	275V	275V
	U_C (N-PE)	255V	–	255V
Lightning impulse current (10/350)	I_{imp} (L-N/N-PE)	12.5/50kA	12.5kA	12.5/50kA
Nominal discharge current (8/20)	I_n (L-N/N-PE)	12.5/50kA	12.5kA	12.5/50kA
Voltage Protection level at In	U_p	〈2kV	〈2kV	〈2kV
	U_p (N-PE)	〈2.5kV	–	〈2.5kV
Response time	tA (L-N/N-PE)	〈25ns/100ns	〈25ns	〈25ns/100ns
Thermal protection	(L-N)	Yes	Yes	Yes
Short-circuit withstand current	I_{SCCR} (L-N)	100kA	100kA	100kA

Mechanical characteristics	220S	440D	380Y
Temperature range	−40℃~+80℃		
Mounting	4xM4 Bolt		
Degree of protection	IP20		
Housing material	Steel		
Indication of disconnector operation	Red LED (ON)		
Remote contacts (RC)	Yes		
Conductor size	L/N: ≥10mm², PE: ≥16mm²		

SZK12.5/50-XXX-S 1P2W

Dimension

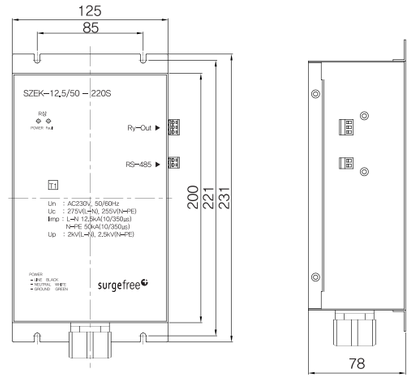

Internal configuration

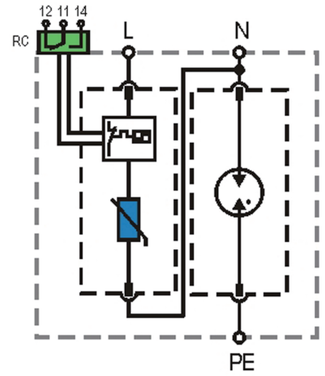

SZK12.5/50-XXX-D 3P3W

Dimension

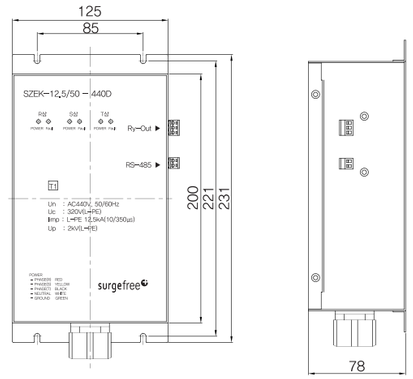

Internal configuration

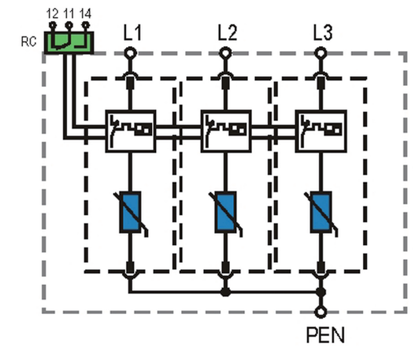

SZK12.5/50-XXX-Y 3P4W

Dimension

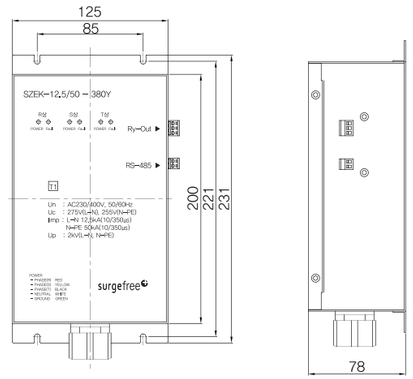

Internal configuration

