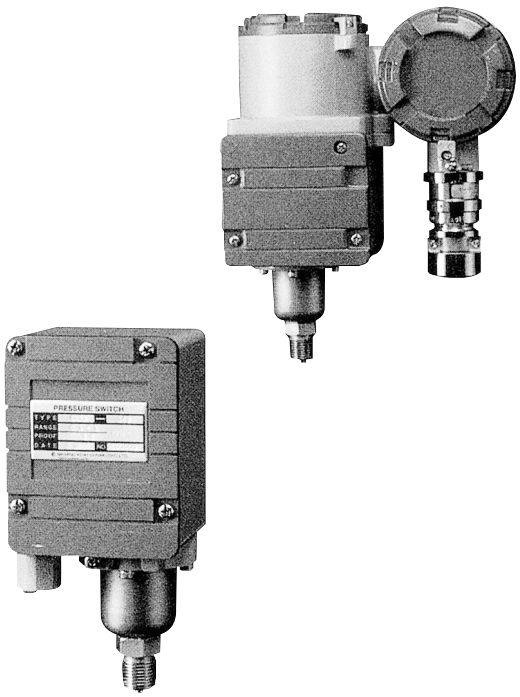

CB33 Pressure Switch
CD75 Explosion-Protected Construction Pressure Switch

OUTLINE

This device is a dead-band adjustable pressure switch designed and manufactured to ensure durability and reliability with an accuracy of 0.5% max. P. It has excellent vibration-proof characteristics thanks to its double snap action (using Belleville springs) and is therefore ideal in the site for direct control of equipment.

FEATURES

- With the application of a Belleville spring, this pressure switch demonstrates excellent vibration resistance and durability. (Double Snap Action Mechanism)
- Adjustable range of dead-band is 3 ~ 20% max. P.
- Since setting is by multiple rotations(50 rotations/ max. P.), accurate setting is possible.
- Acid-proof coating prevents rusting from salt damage.

* To keep high accuracy and long life of pressure switch, pressure adjustable range should be 30 to 65% of pressure range. Please pay attention whether wetted parts materials are suitable for gas or liquid to be measured or not.

SPECIFICATION

Model :
CB33 General process use
CD75 Explosion-protected construction (Exd II B+H_2 T4)

Fluid :
Gas or liquid

Operating condition :
CB33
Under the normal condition, where there is no inflammable gas or liquid which cause the ignition or explosion.
CD75
Hazardous area The details refer to explanation column of explosion-protected construction.

Connection :
G3/8B(PF), G1/2B(PF), Rc1/4(PT), Rc1/2(PT), 1/4NPT female, 1/2NPT (CD75 only)
※For other connections, please contact us.

Wetted parts material :
Bellows 316Lst.st.
Tank · socket 316st.st.
※ Please contact us if phosphor bronze bellows (brass body) is required. (CB33 only)

Pressure range :
CB33
0.01~0.1→1.5~15MPa(0.1~1→15~150kgf/cm²)
−0.1~0 (−1~0kgf/cm²)
CD75
0.01~0.1→1~10MPa(0.1~1→10~100kgf/cm²)
−0.1~0 (−1~0kgf/cm²)

Proof-pressure :
0.15~21MPa (1.5~210kgf/cm²)
(Depending on range)

Operating temperature :
CB33 −20~60℃ (Fluid : −20~80℃)
CD75 −5~40℃ (Fluid : −20~80℃)

Accuracy :
CB33 0.5%max.P.
CD75 1.0%max.P.

Dead band :
Adjustable 3~20%max.P.

Switch :
Micro switch

Number of contact :
One contact (Standard, direct current use) or two contact (Setting dual circuit)

Setting system :
Internal adjustment type

Outlet for electric wire :
CB33 Conduit type PF1/2 female
CD75 Flame-proof packing type

Case material · finishing :
CB33 Aluminium alloy die casting(ADC12) · Blue & Gray Epoxy painted
CD75 Aluminium alloy casting(AC7A) · Blue & Gray Epoxy painted

Construction :
IP65

SPECIFICATION 2

Terminal box : (Option) CB33 only

Although the wire used to have to be removed from the terminal plate and the tester terminal pressed against it when measuring contact resistance, with the provision of a check terminal, simply remove the screws on the terminal plate and insert the terminals of the tester. This ensures stability when measuring and eliminates the trouble of removing the wire from the terminal plate.

Operation lamp : (Option) CB33 only

The on/off state of the pressure switch and the operating state of the microswitch can also be confirmed at a glance.

Weight :

CB33 Approx. 2kgs
CD75 Approx. 5kgs

Electric characteristics :

Switch	Rating			Withstand voltage	Insulation resistance
		Load resistance	Inductive load		
Single setting	125V AC	10A	6A	2000V AC Beween terminal and case 1 minute	500V DC 100M Ω over Beween terminal and case
	250V AC	10A	4A		
	125V DC	0.5A	0.05A		
	250V DC	0.25A	0.03A		
Single setting direct current use	125V AC	10A	6A		
	250V AC	3A	1.5A		
	125V DC	10A	6A		
	250V DC	3A	1.5A		
Single setting dual circuits	125V AC	10A	6A		
	250V AC	10A	4A		
	125V DC	0.5A	0.05A		
	250V DC	0.25A	0.03A		
・Inductive load : Power factor 0.4 over (AC) Time-constant 7ms or less (DC) ※ One contact direct current use : Direct current rating is bigger than standard.					

Pressure range and dead band・Proof-pressure :

Pressure range MPa(kgf/cm²) (Adjustable range)	Dead band MPa(kgf/cm²) (Adjustable range)	Proof-pressure MPa(kgf/cm²)
−0.1 ~0 (−1~ 0)	0.003~0.02 (0.03~0.2)	0.15 (1.5)
0.01~0.1 (0.1~ 1)	0.003~0.02 (0.03~0.2)	0.15 (1.5)
0.02~0.2 (0.2~ 2)	0.006~0.04 (0.06~0.4)	0.3 (3)
0.03~0.3 (0.3~ 3)	0.009~0.06 (0.09~0.6)	0.45 (4.5)
0.04~0.4 (0.4~ 4)	0.012~0.08 (0.12~0.8)	0.6 (6)
0.06~0.6 (0.6~ 6)	0.018~0.12 (0.18~1.2)	0.9 (9)
0.1 ~1 (1~ 10)	0.03 ~0.2 (0.3 ~ 2)	1.5 (15)
0.15~1.5 (1.5~ 15)	0.045~0.3 (0.45~ 3)	2.25 (22.5)
0.2 ~2 (2~ 20)	0.06 ~0.4 (0.6 ~ 4)	3 (30)
0.3 ~3 (3~ 30)	0.09 ~0.6 (0.9 ~ 6)	4.5 (45)
0.5 ~5 (5~ 50)	0.15 ~1 (1.5 ~ 10)	7.5 (75)
0.7 ~7 (7~ 70)	0.21 ~1.4 (2.1 ~ 14)	10.5 (105)
1 ~10 (10~100)	0.3 ~2 (3 ~ 20)	15 (150)
1.5 ~15 (15~150) ※ CB33 only	0.75 ~3 (7.5 ~ 30)	21 (210)

DIMENSIONS 1

CB33

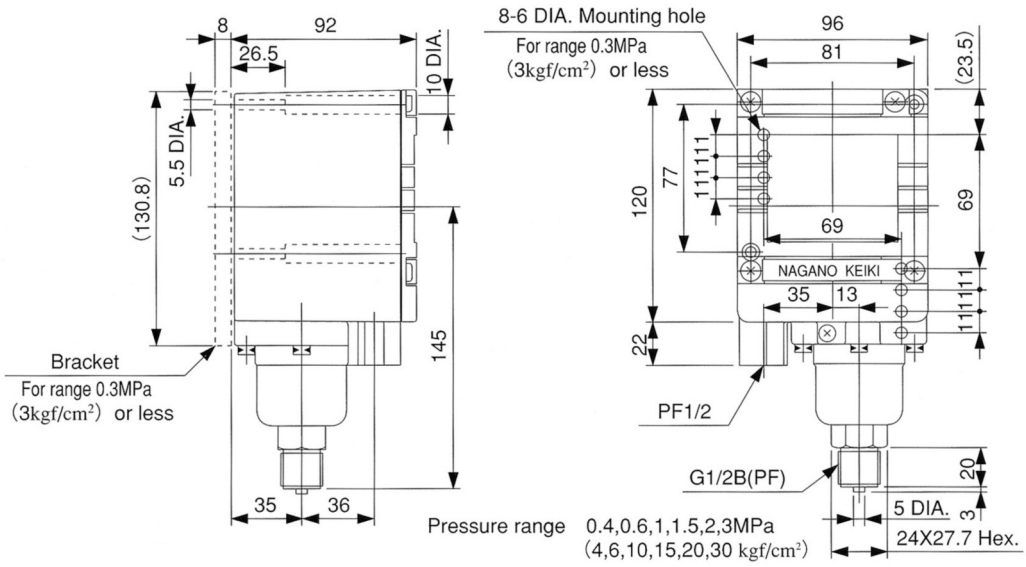

Pressure range 0.4,0.6,1,1.5,2,3MPa
(4,6,10,15,20,30 kgf/cm²)

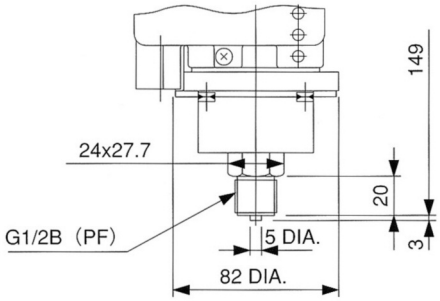

Pressure range 0.2,0.3MPa (2,3kgf/cm²)

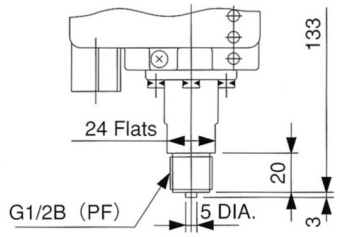

Pressure range 5,7,10,15MPa
(50,70,100,150 kgf/cm²)

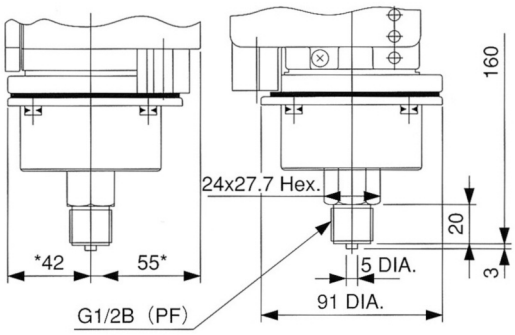

Pressure range −0.1MPa (−1kgf/cm²)

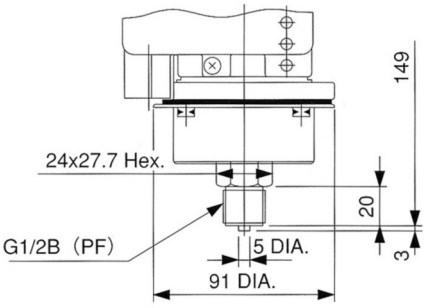

Pressure range 0.1MPa (1kgf/cm²)

Dimensions marked with * are also applied to 0.1MPa (1kgf/cm²)

Option

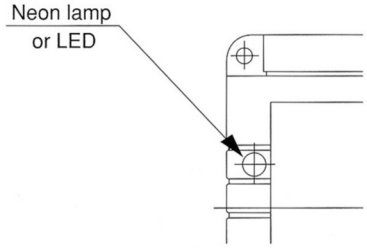

DIMENSIONS 2

CD75

Panel mounting

Pressure range
0.4,0.6,1,1.5,2,3MPa (4,6,10,15,20,30kgf/cm²)

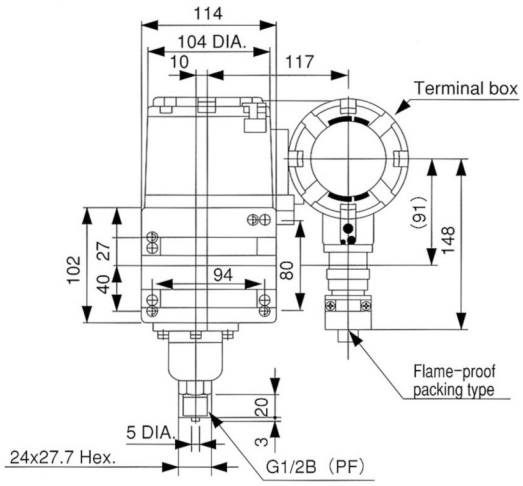

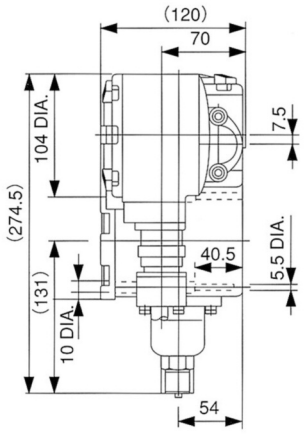

Pressure range
5,7,10MPa (50,70,100kgf/cm²)

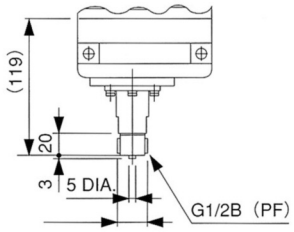

Pressure range
−0.1MPa (−1kgf/cm²)

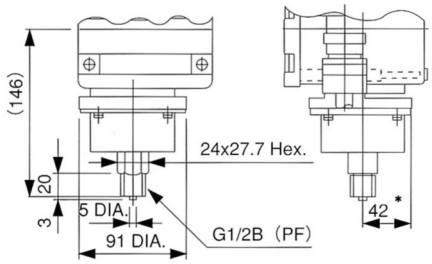

Dimensions marked with * are also applied to 0.1MPa (1kgf/cm²)

Pressure range
0.1MPa (1kgf/cm²)

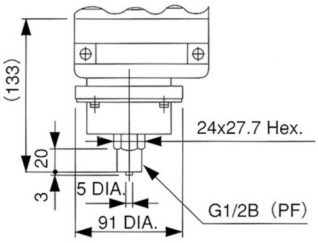

2B pipe mounting

Pressure range
0.1,0.2,0.3MPa
(1,2,3kgf/cm²)

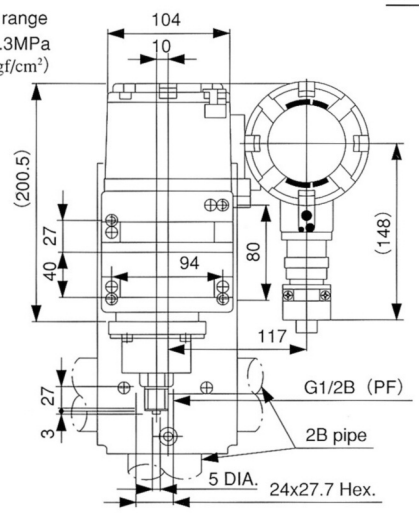

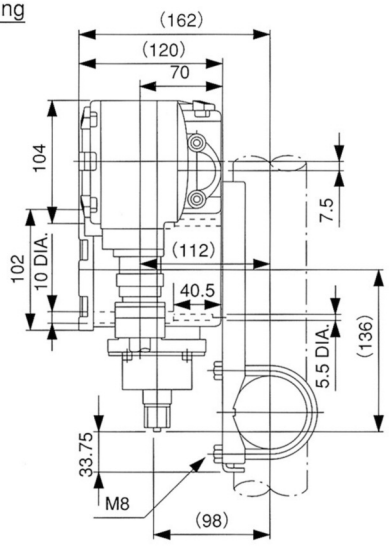

CD75, ASSEMBLY DRAWING

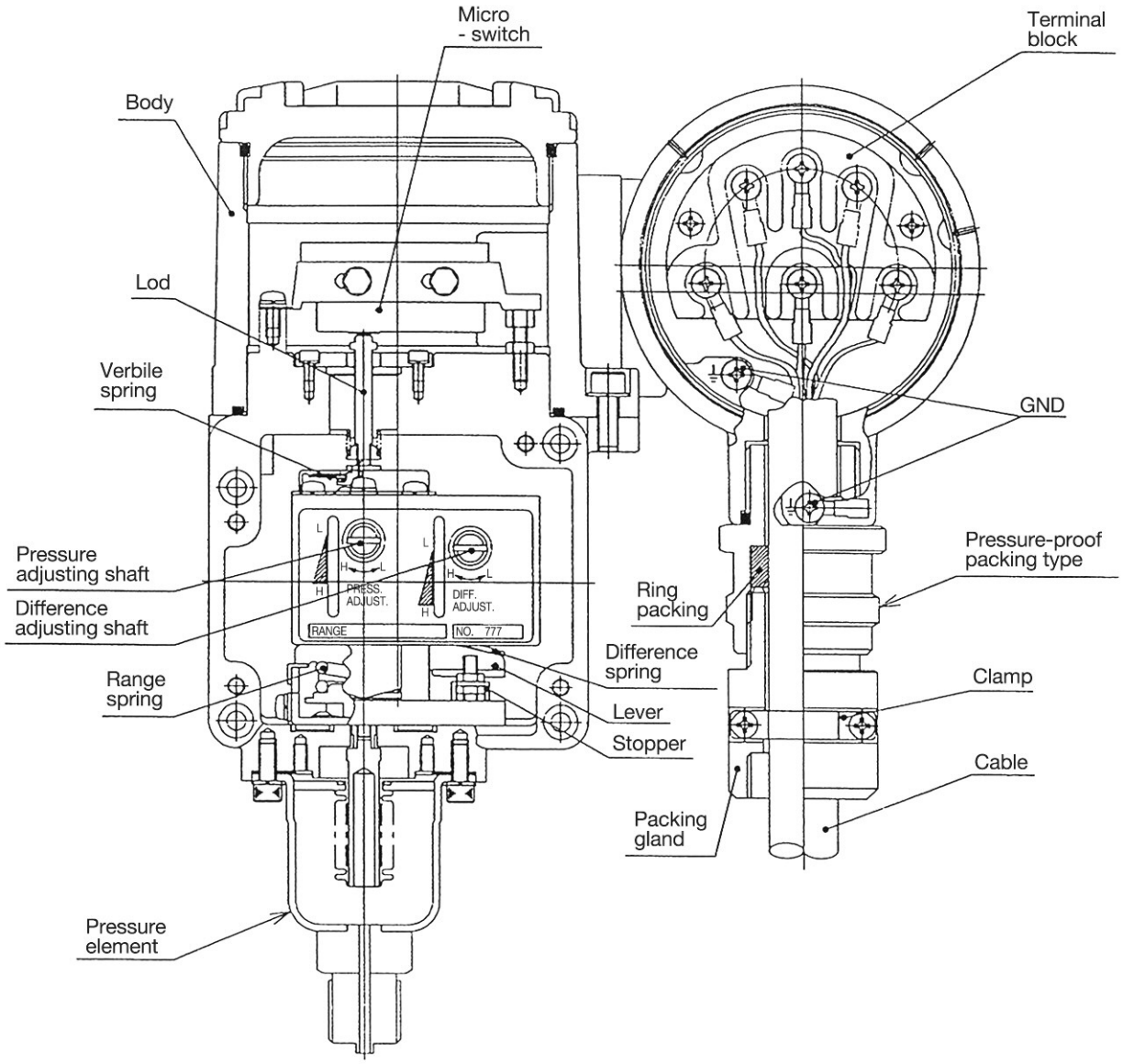

EXPLOSION-PROTECTED CONSTRUCTION

Type approval for explosion-proof : (CD75)

It acquires a technical standard adjusted in international standard IEC by the ministry of Labor notification and the national authorization on the basis of new explosion proof guide.

Type name	Type approval number
CD75	No. C 1 2 3 4 3

Explosion-protected construction :

Explosion protected-construction is a totally enclosed construction such that even if the explosive gas explodes inside the container, the container withstands the force of the explosion and there is no danger of ignition of external explosive gases.
As for our pressure switch produced based on this policy, use can have combustible gases or steam of combustibility liquid in pressure measurement at a place with existing fear in a factory, other business office.

Exd ⅡB+H_2 T4 :

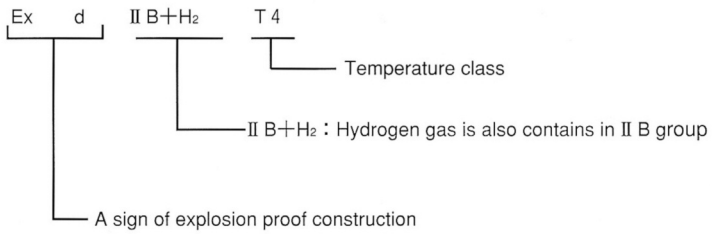

Group classification

A kind of explosion proof electrical instrument and apparatus is classed in group Ⅰ and group Ⅱ by a place to be used. CD75 belongs to group Ⅱ, and comes under machinery using it in a factory except hazardous location of the mine or hazardous location of business office.

Applicable group and classification of gas or steam.

Classification of gas or steam	Applicable group		
A	ⅡA	ⅡB	ⅡC
B	—	ⅡB	ⅡC
C	—	—	ⅡC

Ignition point of gas or steam which T4 can apply.

Ignition point of gas or steam	Applicable temperature class					
Higher than 450℃	T1	T2	T3	T4	T5	T6
Higher than 300℃	—	T2	T3	T4	T5	T6
Higher than 200℃	—	—	T3	T4	T5	T6
Higher than 135℃	—	—	—	T4	T5	T6
Higher than 100℃	—	—	—	—	T5	T6
Higher than 85℃	—	—	—	—	—	T6

Example of applicable gas or steam.

Temperature class / Group	T1	T2	T3	T4	T5	T6
ⅡA	Acetone Ammonia Carbon monoxide Ethane Acetic acid Ethyl acetate Toluene Propane Benzene Methanol Methane	Ethanol 1-butanol Butane	Hexane	Acetaldehyde		
ⅡB		Ethylene Ethylenoxide		Ethylmethyl Ether		
ⅡC	Hydrogen	Acetylene			Carbon bisulfide	Nitric acid ethyl

WIRING

CB33

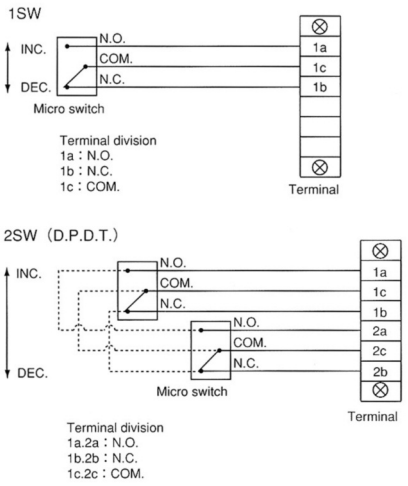

CD75

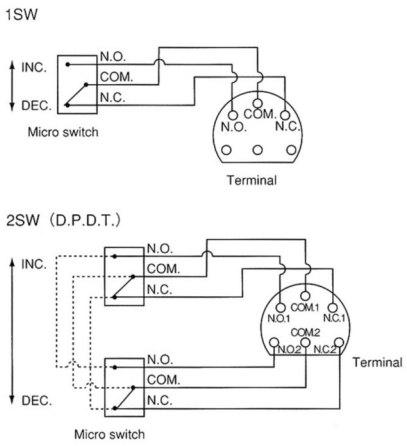

OUTLET FOR ELECTRIC WIRE

Conduit Connection	Packing inner DIA. (d)	Applicable cable Out DIA.	Protecting tube Connection
PF1/2	8 DIA.~12 DIA. Available by 1mm step	7.0 DIA.~12.0 DIA. Available by 0.5mm step	PF1/2
PF3/4	13 DIA.~16 DIA. Available by 1mm step	12.0 DIA.~16.0 DIA. Available by 0.5mm step	PF3/4
PF1	17 DIA.~20 DIA. Available by 1mm step	16.0 DIA.~20.0 DIA. Available by 0.5mm step	PF1

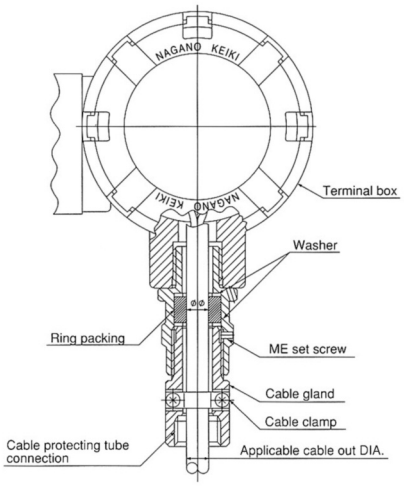

Type No. constitution

Please specify Type No., each specification and range when ordering.

Note : For this Model, there is no applicable item for the figures X, but please specify X when ordering.

Pressure switch

Selection spec.

Additional spec. (Option)

1	2	3	4	5	6	7	8	9	10	11	12	13	14	15
C	B	3	3	—			2				X	X	X	

Type No.

1 Switch

0	Single setting S.P.D.T.
1	Single setting direct current use S.P.D.T.
2	Single setting dual circuit D.P.D.T.

2 Connection

3	G3/8B
4	G1/2B
7	Rc1/4
9	Rc1/2
X	1/4NPT female
M	1/2NPT

3 Wetted parts material

3	Socket : 316st.st.,Bellows : 316Lst.st.

4 Pressure range (MPa)

(When ordering, please specify pressure range & unit.)

1	−0.1~0
2	0.01~0.1、0.02~0.2、0.03~0.3
3	0.04~0.4、0.06~0.6、0.1~1 0.15~1.5、0.2~2、0.3~3
4	0.5~5、0.7~7 、1~10、1.5~15

5 Type of contact

1	H : Upper limit type with one contact
2	L : Lower limit type with one contact
4	2H : Upper limit type with two contact
5	2L : Lower limit type with two contact

6 Switch

0	Standard
3	Standard + gold plated

7 Outlet for electric wire

2	Conduit PF1/2 female

8 Treatment

0	Nil
1	Use no oil
2	Use no water
3	Use no oil & water

9 Terminal box

0	Nil
1	W/Check terminal

10 Operation lamp

0	Nil
1	With LED (24V DC)
3	With neon lamp (110V AC)
5	With neon lamp (220V AC)

11 Other additional spec.

0	Nil
1	Please specify your requirement For nuclear power plant, bracket, case finishing

※For range 0.3MPa or less, bracket is equipped as standard.

15 Document

0	Nil
1	Please specify your requirement Drawing one sheet, Instruction manual, Inspection procedure, Mill sheet, Test report

※ Appoint old model model in case of hope extra.

Type No. constitution

Please specify Type No., each specification and range when ordering.

Note：For this Model, there is no applicable item for the figures X, but please specify X when ordering.

Pressure switch

C D 7 5 — 1 2 3 — 4 5 6 7 8 9 10 11 12 13 14 15

Selection spec. Additional spec.（Option）

Type No.

1 Mounting type

3	Panel mounting, Flame-proof packing type
7	2B pipe mounting, Flame-proof packing type

2 Connection

3	G3／8B
4	G1／2B
7	Rc 1／4
9	Rc 1／2
M	1／2NPT
X	1／4NPT female

3 Switch

0	Single setting（S.P.D.T.）
1	Single setting direct current use（S.P.D.T.）
2	Single setting dual circuit（D.P.D.T.）

4 Pressure range（MPa）

（When ordering, please specify pressure range & unit.）

1	−0.1～0
2	0.01～01、0.02～0.2、0.03～0.3
3	0.04～0.4、0.06～0.6、0.1～1、0.15～1.5、0.2～2、0.3～3
4	0.5～5、0.7～7、1～10

5 Type of contact

1	H ：Upper limit type with one contact
2	L ：Lower limit type with one contact
4	2H：Upper limit type with two contact
5	2L ：Lower limit type with two contact

6 Switch

0	Standard
3	Standard + gold plated

7 Outlet for electric wire

3	Packing inner DIA.11mm（PF1／2 female）
4	Packing inner DIA.12mm（PF1／2 female）
6	Packing inner DIA.14mm（PF3／4 female）
8	Packing inner DIA.16mm（PF3／4 female）
A	Packing inner DIA.17mm（PF1 female）

※Since the inside diameter of the packing can be manufactured in 1-mm step, please consult us for other cases.

8 Treatment

0	Nil
1	Use no oil
2	Use no water
3	Use no oil & water

9 Other additional spec.

0	Nil
1	Please specify your requirement Case finishing

15 Document

0	Nil
1	Please specify your requirement Drawing one sheet, Instruction manual, Inspection procedure, Mill sheet, Test report