TM / TD Series

Three-Way Control Valves

Mixing (TM-Series) & Diverting (TD-Series) Service

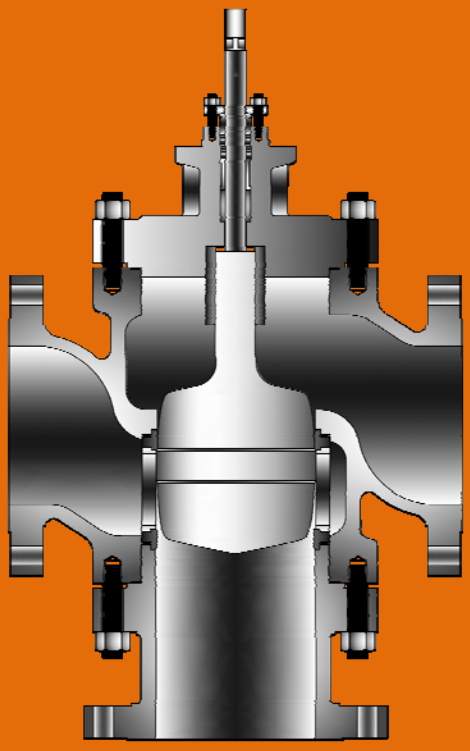

Contents

Contents & Model Numbering System ---------- 2

Features & General ---------- 3

Valve Specification ---------- 4

Materials Application for Temperature ---------- 5

Dimensions ---------- 6

Model Numbering System

Body	**TM**	Three Way Mixing Service
	TD	Three Diverting Service
Trim	**LC**	Linear Contoured
	LP	Linear Ported
	EC	EQ-% Contoured
	EP	EQ-% Ported
Actuator	**RA**	Spring Diaphragm Reverse Action
	DA	Spring Diaphragm Reverse Action
	CS	Spring Cylinder
	CD	Double Cylinder
	EM	Electric Motoer Operated

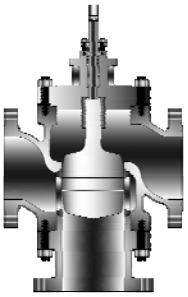

Modeling

1	-	2	-	3
TM		*EC*		*CS*
3-Way Mixing		EQ-% Contoured		Spring Cylinder

Example **TMEC-CS**

Features

The TM/TD Series provide a line of three-way globe type control valves designed for either Mixing or Diverting applications.

TM-Series

The mixing type uses a single seated body in combination with a special bottom port assembly with Mixing Service, the three-way valve has two inlet ports and one outlet, and is used to combine two fluids in variable proportions.

TD-Series

The three-way valve is used to split one inlet stream into two outlets, or the incoming flow can be entirely diverted to or the other of the two outlet ports.

General

- Heavy Guiding

Construction of the **TM/TD** Series includes top guiding in the plug, as well as guiding within the seat ring locations providing an extermely well supported and stable design.

- High Capacity

Large flow galleries in the **TM/TD** Series provide high capacity designs with low pressure recoveries. High critical flow factors are attained in both mixing and diverting configurations.

- Flow Stability

The **TM/TD** Series a dual seated design with flow tending to open the valve at both ports. This provides inherent dynamic stable resulting in excellent throtting control performance.

- Wide Operating Range

Design are available in various sizes and can be configured to operate within an extremely wide temperature range. This is accomplished through use of high performance materials and design configurations.

- NACE Compliance

Construction for Sour Service Application in accordance with NACE standard MR 0103 is readily available. Application requiring compliance to MR 0175, 2003 Rev or ISO 15156 can also be providec

- Seat Leakage Class

Class Ⅱ shut-off is standard leakage rating. Class Ⅲ and Ⅳ can be provided depending on application service conditions. Consult with factory on Class Ⅲ and Ⅳ applications and requirements.

- Accessories & Option

Extension Bonnet / Limit Stop / Body Drain Plug / NACE Compliance / Other Materials / Oxygen Cleaning
Non-Destructive Examination / Electric Actuator.
For Accessories, cosult **bFS.**

Specification

Body Type	3-Way Globe Valve
Flow Direction	Mixing / Flow to Open.
Trim Type	Standard : Top & Port Guided Ported Plug.
	Special : Top & Bottom Guided Contoured Plug.
Trim Size	Full Capacity Only
Characteristic	Linear, EQ-%.
Cv Ratio	50:01:00
Seat Leakage Class	Standard / FCI 70-2 Class Ⅲ. Optional / FCI 70-2 Class Ⅳ.
Bonnet Type	Stud Bolted Bonnet.

Flow Coefificients / Rated Cv

No	Valve Size	Rated Travel / mm	Rated Cv
1	3/4" (20A)	12.7	6
2	1" (25A)	12.7	9
3	1-1/2" (40A)	19.05	21
4	2" (50A)	25.4	36
5	2-1/2" (65A)	25.4	54
6	3" (80A)	38.1	75
7	4" (100A)	38.1	130
8	6" (150A)	50.8	270
9	8" (200A)	63.5	500
10	10" (250A)	63.5	750
11	12" (300A)	88.9	1100
12	14" (350A)	101.6	1500
13	16" (400A)	101.6	1920

Rating and Connections

No	Valve Size	ANSI 150 & 300	ANSI 600
1	3/4" (20A)	SW/SCRD/FF/RF/RTJ	SW/RF/RTJ
2	1" (25A)	SW/SCRD/FF/RF/RTJ	SW/RF/RTJ
3	1-1/2" (40A)	SW/SCRD/FF/RF/RTJ	SW/RF/RTJ
4	2" (50A)	SW/SCRD/FF/RF/RTJ	SW/RF/RTJ
5	2-1/2" (65A)	BW/RF/RTJ	BW/RF/RTJ
6	3" (80A)	BW/RF/RTJ	BW/RF/RTJ
7	4" (100A)	BW/RF/RTJ	BW/RF/RTJ
8	6" (150A)	BW/RF/RTJ	BW/RF/RTJ
9	8" (200A)	BW/RF/RTJ	BW/RF/RTJ
10	10" (250A)	BW/RF/RTJ	BW/RF/RTJ
11	12" (300A)	BW/RF/RTJ	BW/RF/RTJ
12	14" (350A)	BW/RF/RTJ	BW/RF/RTJ
13	16" (400A)	BW/RF/RTJ	BW/RF/RTJ

Option : Larger Size Valve & High Pressure Application.

Material Application for Temperature

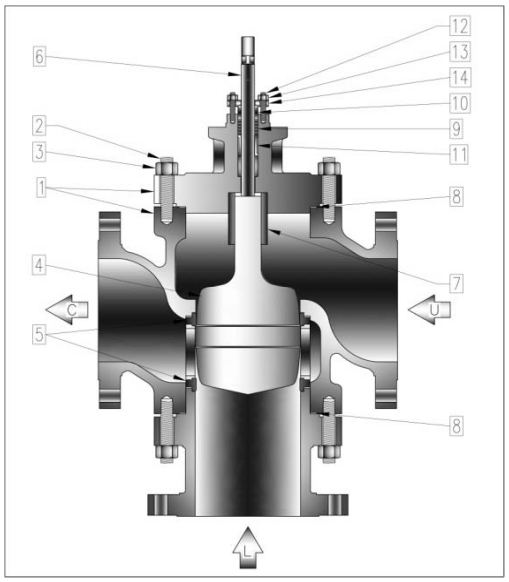

TM-Series

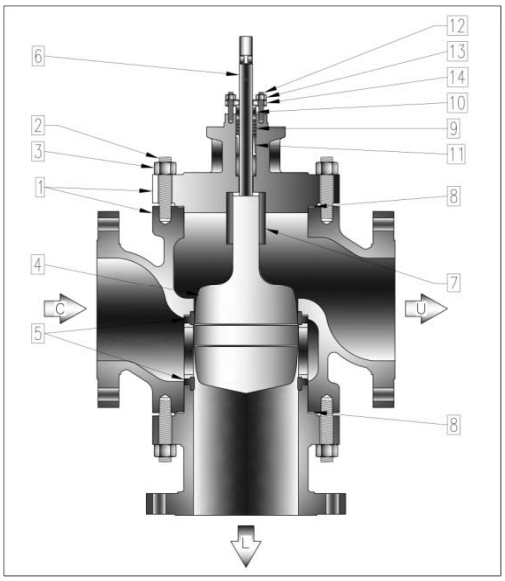

TD-Series

Fluid Temperature (deg.C			-196	-29	425	450	480	535	565
Ref No.	Parts Name		Standard Materials						
1	Body & Bonnet			A216-WCB					
				Alloy Steel					
				Stainless Steel					
2	Body	*1		SNB7			SNB16		
	Studs	*2		ASTM A193 Gr. B8 Class II					660 SS
3	Body	*1		S45C			ASTM A194 Gr.4		
	Nuts	*2		304 SS					316 SS
4	Plug			316 SS / Option :316 SS with Stellited.					
5	Seat-ring			316 SS / Option :316 SS with Stellited.					
6	Stem			316 SS / Option : 17-4PH					
7	Guide Bushing			440B SS					
8	Body Gasket			Spiral Wound					
9	Packing			See Specification Sheet					
10	Packing Gland			316 SS					
11	Packing Spacer			316 SS					
12	Packing Studs			304 SS / ASTM A193 Gr. B8 Class II for Class 900# over.					
13	Packing Nuts			304 SS					
14	Packing Flange			316 SS					

Note

*1 / For Carbon Steel or Alloy Steel Body.

*2 / For Stainless Steel Body.

Others

Dimensions

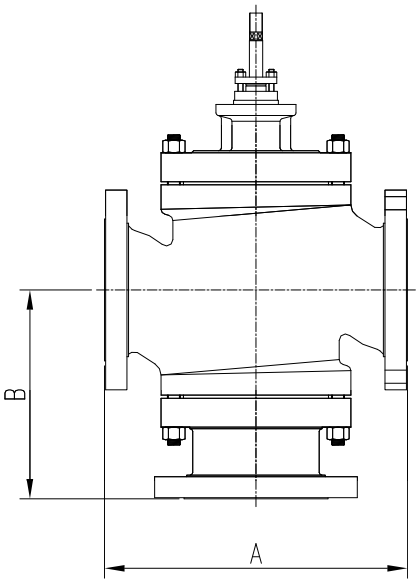

No	Valve Size	Rating (ANSI)	TM / Mixing		TD / Diverting		
			A	B	A	B	C
1	3/4" (20A)	150	184	136	184	-	-
		300	194		194		
		600	206		206		
2	1" (25A)	150	184	136	184	-	-
		300	197		197		
		600	210		210		
3	1-1/2" (40A)	150	222	155	222	175	103
		300	235		235		110
		600	251		251		118
4	2" (50A)	150	254	165	254	194	118
		300	267		267		124
		600	286		286		134
5	2.5" (65A)	150	276	187	276	216	129
		300	292		292		137
		600	311		311		146
6	3" (80A)	150	298	200	298	231	140
		300	317		317		149
		600	337	217	337	248	159
7	4" (100A)	150	352	225	352	266	167
		300	368		368		175
		600	394	254	394	279	188
8	6" (150A)	150	451	286	451	327	194
		300	473		473		205
		600	508	311	508	352	222
9	8" (200A)	150	543	334	543	388	218
		300	568		568		230
		600	610	360	610	414	251
10	10" (250A)	150	673	387	673	454	276
		300	708		708		294
		600	752	413	752	492	316

- Others Size Dimension : Please contact to our technical team.

Metric Conversion Tables

LENGTH		
Multiply	**By**	**To Obtain**
millimeters	0.039	inches
centimeters	0.394	inches
inches	2.54	centimeters
feet	30.48	centimeters
feet	0.304	meters

AREA		
sq. centimeters	0.155	sq. inches
sq. centimeters	0.001076	sq. feet
sq. inches	0.452	sq. centimeter
sq. inches	0.00694	sq. feet
sq. feet	929	sq. centimeter

FLOW RATES		
gallons US Minute	3.785	liters/min
gallons US Minute	0.133	cubic feet/hour
gallons US Minute	0.227	cubic meter/hour
cubic feed minute	7.481	GPM
cubic feed hour	0.1247	GPM
cubic feed hour	0.01667	cubicfeet/min
cubic meter hour	4.403	GPM
cubic meter hour	35.31	cubic feet / hour

VELOCITY		
feed per second	0.3048	meter/second
feed per second	1.097	km/hour
feed per second	0.6818	miles/hr

Temperature Conversion
F (Fahrenheit) = C (9/5)=32
C (Celsius) = (F-32)5/9

VOLUME AND CAPACITY		
Multiply	**By**	**To Obtain**
cubic feet	28.32	liters
cubic feet	7.4805	gallons
liters	61.02	cubic inches
liters	0.03531	cubic feet
liters	0.264	gallons
gallons	3785.0	cubic centimeter
gallons	231.0	cubic inches
gallons	0.1337	cubic feet

WEIGHT		
pounds	0.453	kilogram
kilgram	2.205	pounds

PRESSURE AND HEAD		
pound / sq. inches	0.06895	bar
pound / sq. inches	0.06804	atmosphere
pound / sq. inches	0.0703	kg/cm2
pound / sq. inches	2.307	ft of H2O (4℃)
pound / sq. inches	0.703	m of H2O (4℃)
pound / sq. inches	5.171	centimeter of hg (4℃)
pound / sq. inches	2.0	inch of hg (4℃)
atmosphere	14.7	psi
atmosphere	1.013	bar
atmosphere	1.033	kg/cm2
atmosphere	101.3	kPa
bar	14.5	psi
kilogram/sq cntimeter	14.22	psi
kilo Pascal	0.145	psi

www.bfsvalve.com

BFS Incorporation
34-5, Samjeong-dong, Ojeong-gu, Bucheon-City
Geonggi-Do, KOREA
T/+82-32-329-9142. F/+82-32-329-9148
E-mail / bfsvalve@bfsvalve.com