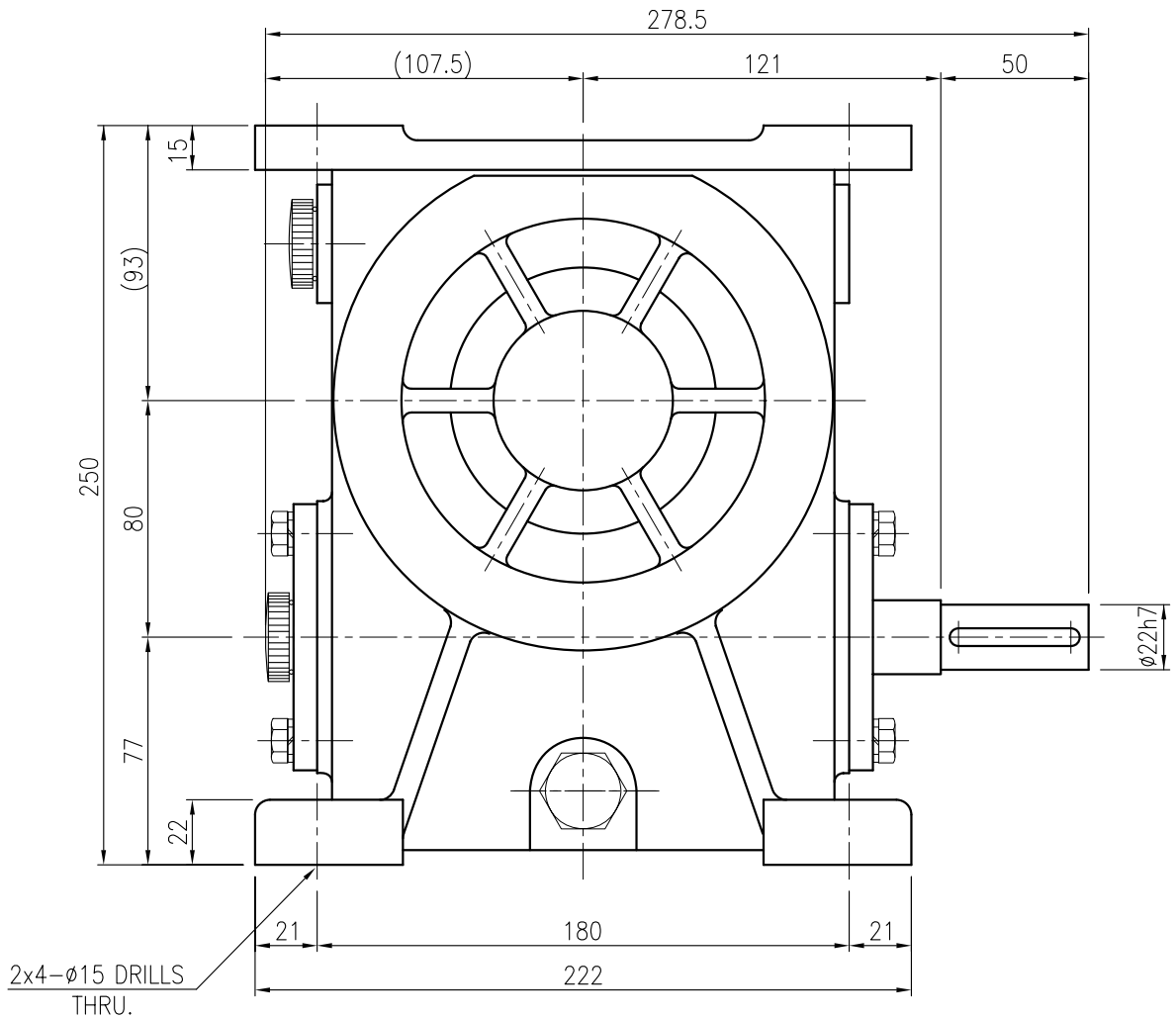
278.5
(107.5)
121
50
15
(93)
250
80
77
22
ø22h7
21
180
21
222
2x4–ø15 DRILLS
THRU.

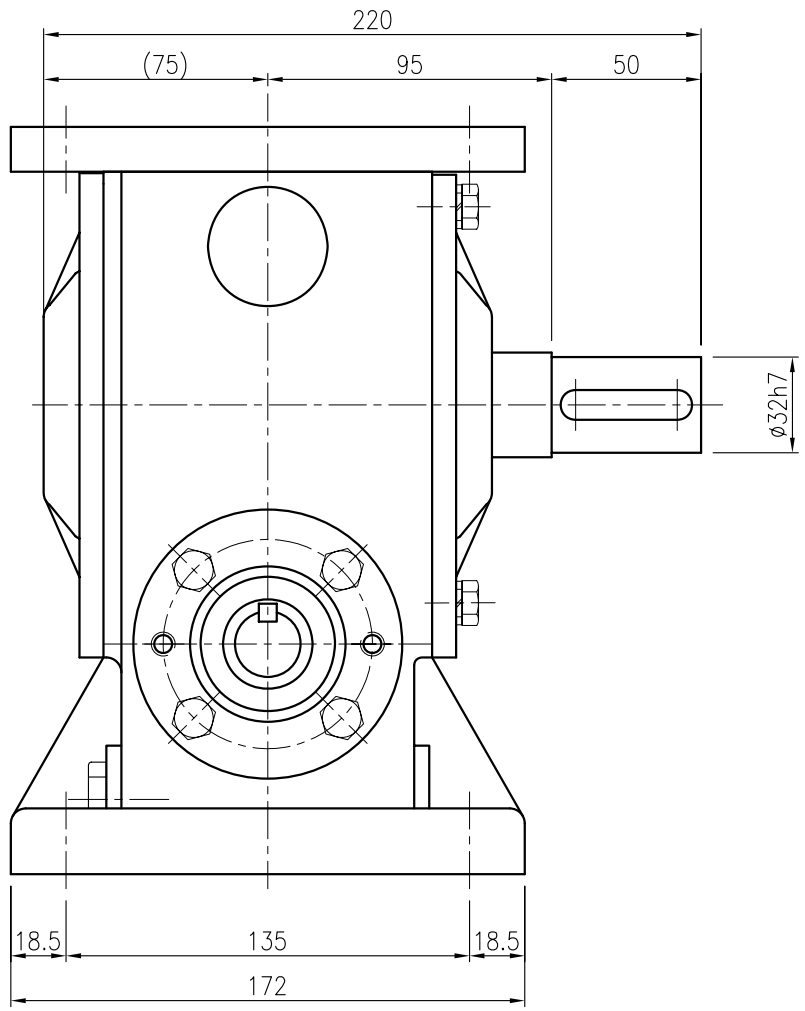
220
(75)
95
50
ø32h7
18.5
135
18.5
172

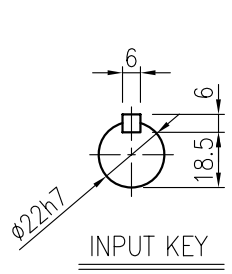
6
6
18.5
ø22h7
INPUT KEY

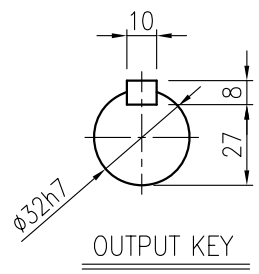
10
8
27
ø32h7
OUTPUT KEY