GGM

www.ggm.co.kr

# Manual

# GSA SERIES
## SPEED CONTROL UNIT




■ Main Office/1sr Factory : 327-3 Sonne-Dong, Sosa-Gu, Buchun-City, Kyonggi-Do, Korea
Telephone I:+82-32-664-7790 Fax:+82-32-611-7791

■ 2nd Factory : 272-11 Dodang-Dong, Wonmi-Gi, Buchun-City, Kyonggi-Do, Korea
Telephone:+82-684-7791 Fax:+82-683-5059

GGM

GGM Co., Ltd.

Thank you for purchasing the GGM product.
Before use this product, read well the manual certainly and understand all about knowledge, safety information and cautions of product, and use right way. After read, please be sure to keep fixed place to refer anytime.

# 1. Confirmation at product arrival

- Confirm whether product is same with order.
- If another product is installed, there is danger of injury or fire hazard.
- Products are protected in Shock Protection paper packaging, and there are the following items. Please confirm whether there are all of the things correctly as followings;

1) CONTROLLER ---------- 1 unit
2) SOCKET (11PIN) ----------1 unit
3) External speed setter----------1 unit
4) Manual(this booklet) ----------1 copy

## 2. Precautions

### ■ Caution for installation

1. Use in the places where ambient temperature range is −10 ℃ ~ +50 ℃ and humidity is 85% or less. Also, avoid the place where reaches direct ray of light, and should install COVER etc. when use above places.
2. Avoid the places where there are a lot of dusts, vibracións, and ocorring flammable GASes, corrosive GASes.

### ■ Caution for Wiring

1. Use SOCKET for connection and do not solder directly to PIN of main body.
2. Confirm well termiknal numbers in case of SOCKET connection.
   Also, when insert CONTROL PACK to SOCKET, turn OFF power and insert after confirm PIN number.
3. Large output MOTOR, solenoids, high-frequency power, electric welding, etc. may cause malfunction of CONTROL PACK. Wire separating from CABLE of the main circuit of above devices by power of separate circuit.
   In NOISE Section, prevent malfunction referring Clause 5(unit wiring diagram).
4. Wire in the shortest distance installing MOTOR and CONTROL PACK as near as possible

## ■ Safety Instructions

1. Avoid use near explosive atmosphere, atmosphere of flammable gases, corrosive atmosphere, the place possible to touch water, and combustible materials.
2. Do not work of moving from the current carrying state, connection, checking. Please work after turn off power.
3. Connect based on the wiring diagram and make to be sure
4. In case of mount motor, control device on unit, make not to be reached by hand or make ground.
5. Do not operate in the exposed state of the parts that is carrying current.
6. Turn off power in case of power outage and thermal protector is operated.
   There are injury and danger of device when reset suddenly.
7. Avoid to touch output terminals of the control device for 30 seconds after turn off power. There is danger of electric shock by residual current-voltage.
8. Do not use exceeding specification of motor, control device.
9. Do not put fingers or objects to closed-region of motors, control devices.
10. Do not operate with wet hands. There is a risk of electric shock.
11. Do not hold the output shaft of the motor, running region,the lead when carry.
12. Please check the actual product is same as goods ordered.
13. Use after immobilization of the motor certainly.
14. Install cover etc. to avoid contact with rotating parts.
15. Check the direction of rotation before join with machine.
16. Avoid getting on or hang down on control device, motor.
17. Do not touch Motor output shaft (spline, toothed wheel region) with the bare hands.
18. Protection device is not supplied with the motor. Install overload protection device.
    It is also recommended to install the protectional device (circuit blocks, etc.) except overload protective device. .
19. When removing the plug, do not pull out holding the plug.
    There is danger of electric shock, fire.
20. Motors and control devices should be used in a given combination. There is a risk of fire.
21. Set PARAMETER that was set to the machine before start operation after join with Machine..
22. In case of start operation after joining with machine, set the state to stop in emergency at any time..
23. Turn off power immediately in case of occurring abnormal state.
There are shock, injury and fire risk.
24. Do not touch to Rotors (output shaft) during operation. There is risk of injury danger by enwinding.
25. Do not touch the hands and body on operation or after operation of the motor, control system.
26. Do not use in area where there is a large amount of static electricity. May cause personal injury according to a malfunction.

## 3. Product Features and Specifications

It is used for INDUCTION SPEED CONTROL MOTOR of 6W~180W and REVERSIBLE SPEED CONTROL MOTOR of 6W~ 90W and SPEED CONTROL & BRAKE MOTOR of 6W~180W.

Can control and set rotational speed of MOTOR by external speed setter. Instantaneous stop function is possible by electrical BRAKE. It is COMPACT PLUG-IN (11PIN) TYPE that is easy to handle and install. There are SLOW RUN, SLOW STOP function that moving and dead lock are not attained rapidly and operates slowly. There is built-in time setting function that is easy to control. Parallel operation is possible.(Parallel operation can operate establishing plural MOTOR CONTROL PACKs at the same time with same speed by ONE external speed setter.)

| | | GPA-U | GPA-J | GPA-C | GPA-L |
|---|---|---|---|---|---|
| Rated voltage and Power Frequency | | single phase<br>AC110V 60Hz<br>AC115V 60Hz | single phase<br>AC100V<br>50/60Hz | single phase<br>AC220V 50/60Hz<br>AC230V 50/60Hz<br>AC240V 50Hz | single phase<br>AC200V<br>50/60Hz |
| Operating Voltage Range | | ±10% (Rated voltage Contrast) | | | |
| Rated Current | | 3A | | | |
| Applied motor output | INDUCTION | 6 ~ 180W | | | |
| | REVERSIBLE | 6 ~ 90W | | | |
| | SPEED&BRAKE | 6 ~ 180W | | | |
| Speed control range | | 60Hz : 90~1700RPM, 50Hz : 90~1400RPM | | | |
| Speed regulation | | 5%(standard value) | | | |
| speed setter | | Speed can be adjusted by external speed setting device | | | |
| brake | | Instantaneous stop function is possible by electrical BRAKE. | | | |
| Electric BRAKE time | | 0.5 seconds(standard value) | | | |
| Parallel operation | | There is function | | | |
| SLOW RUN<br>SLOW STOP | | MOTOR rotation can be accelerated and decelerated gradually. | | | |
| Operating temperature range | | -10℃~40℃ | | | |
| Operating humidity range | | 86% or less (no condensation) | | | |
| Storage temperature | | -20℃~60℃ | | | |
| Insulation resistance | | In normal temperature and humidity, make 100MΩ or more between CASE and the PIN by measuring DC 500V MEGGER | | | |
| Working voltage | | There is no singularity even if approve 1500V 50/60 Hz for 1 minute between CASE and PIN interval in normal temperature and humidity. | | | |

※ Applied MOTOR is our company SOCKET TYPE SPEED CONTROL MOTOR.
(use MOTOR for TG voltage 24V .) ELECTRICAL BRAKE has not holding power.

## 4. Product outside view

■ CONTROL PACK

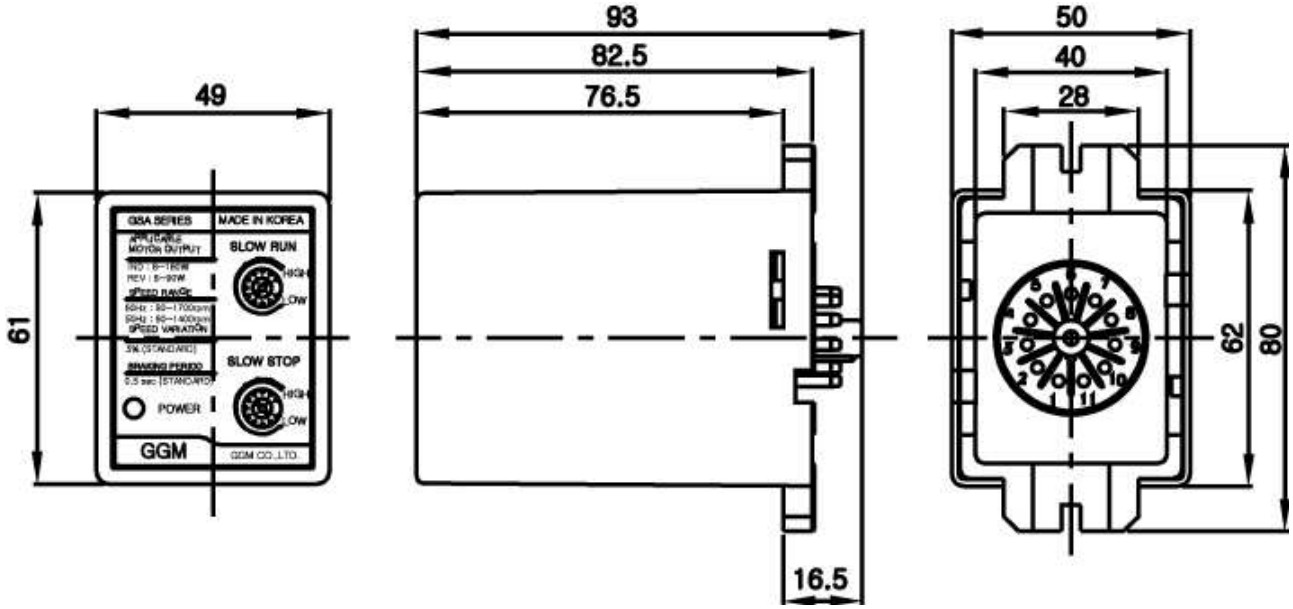


■ 11 PIN SOCKET

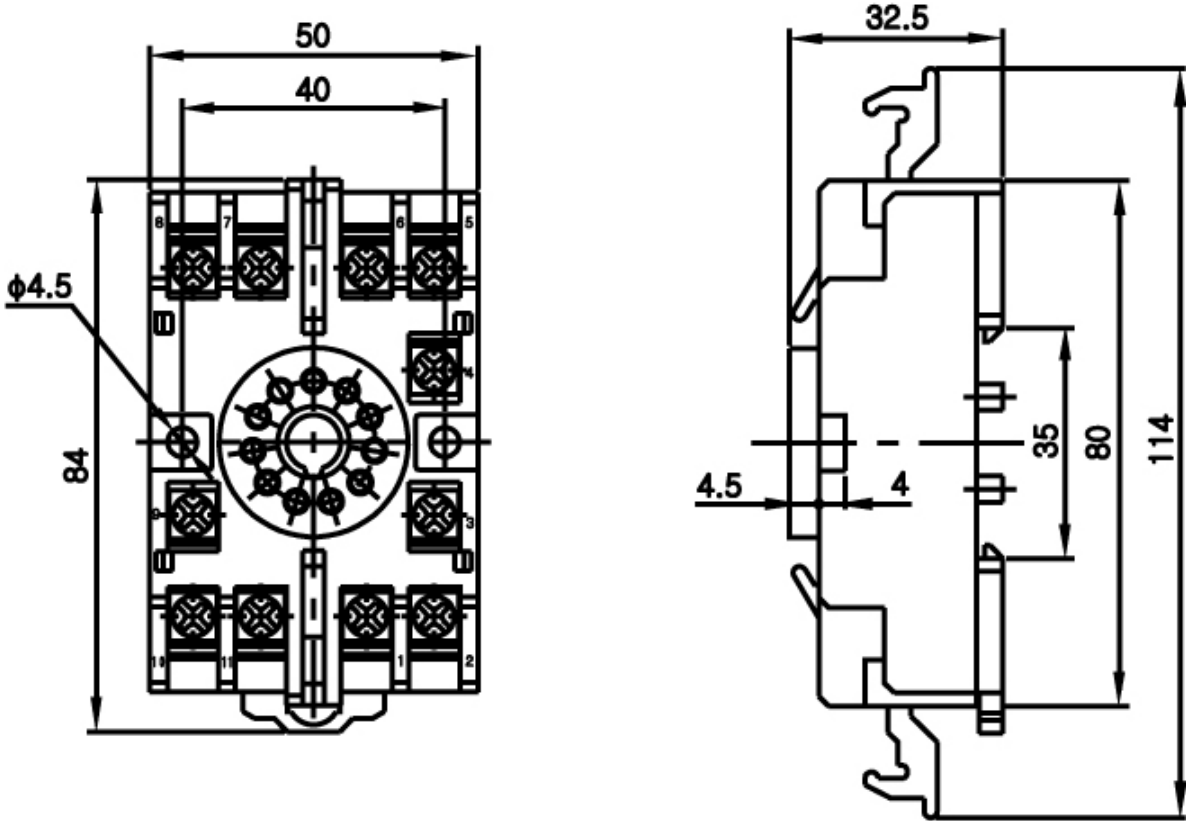

■ External speed setter

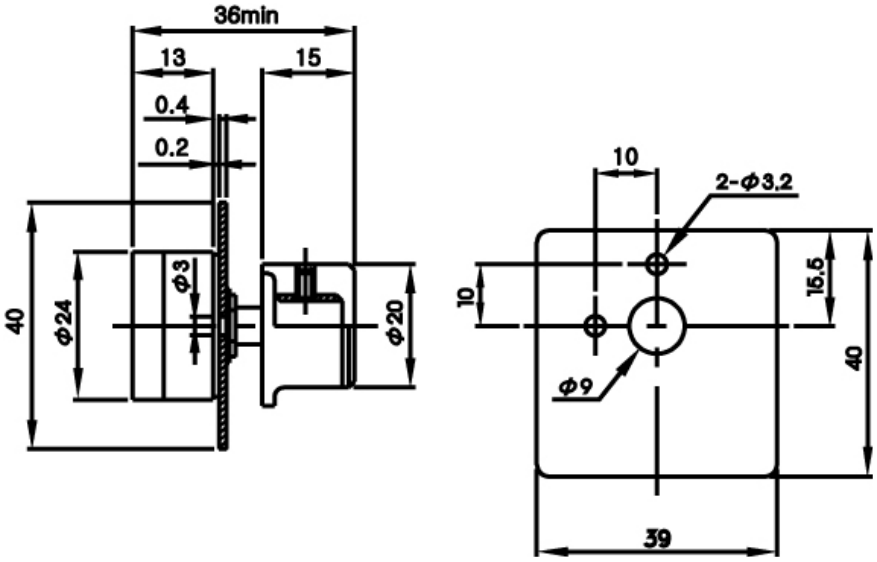


5. Main Body wiring diagram

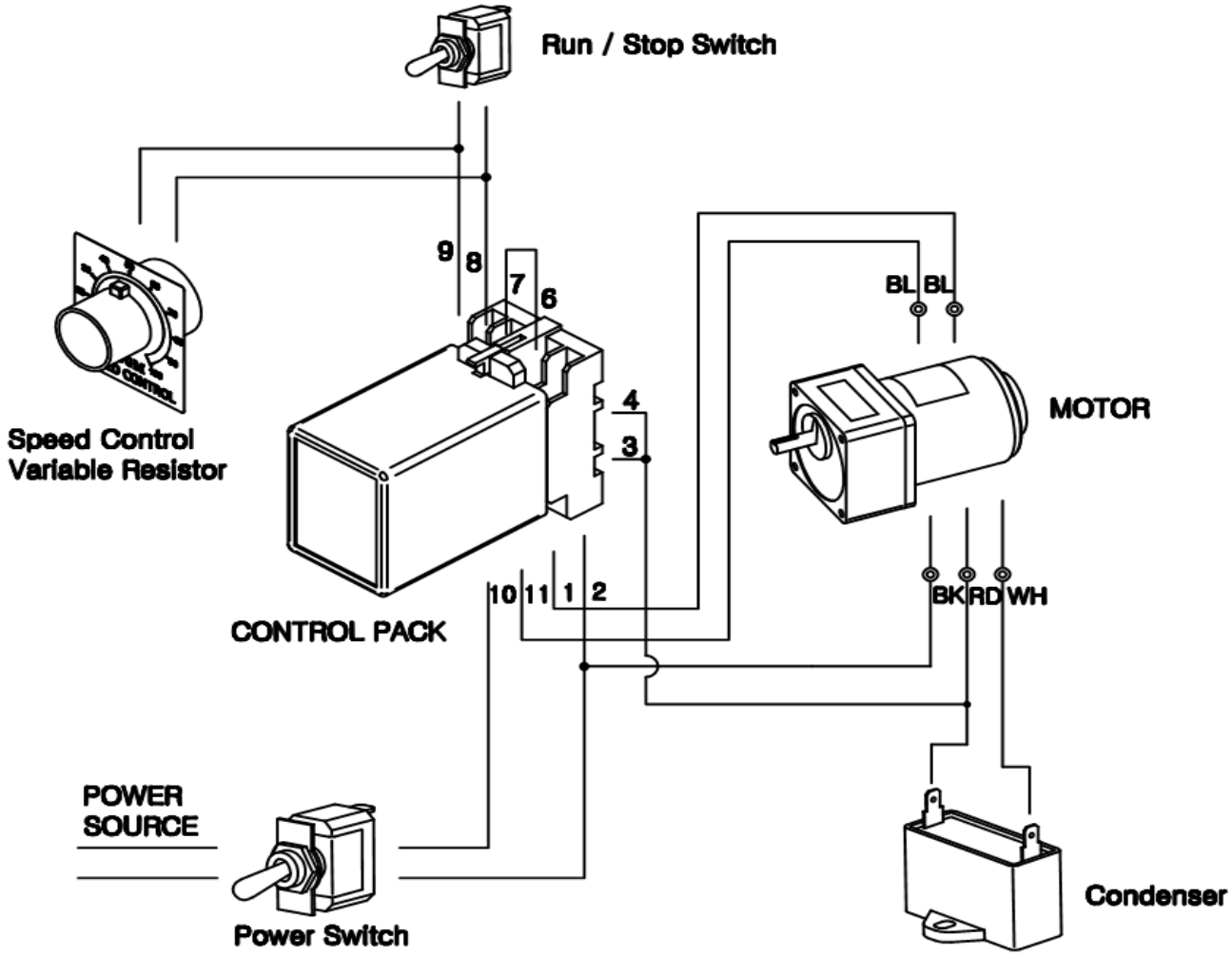


1. If turn on power switch(SW1), [POWER LAMP] of CONTROL PACK is lit.
2. MOTOR speed can be adjusted without stage control by external speed setter.
3. Operational current of the MOTOR flows along the thick solid line.

Use about 0.75㎟ wire for thick solid line, and about 0.75㎟ wire for thin solid line.

## 6. Basic Electrical Wiring (INDUCTION MOTOR)

6-1.In case of control "one-way operation + speed" in INDUCTION MOTOR (6W~180W)

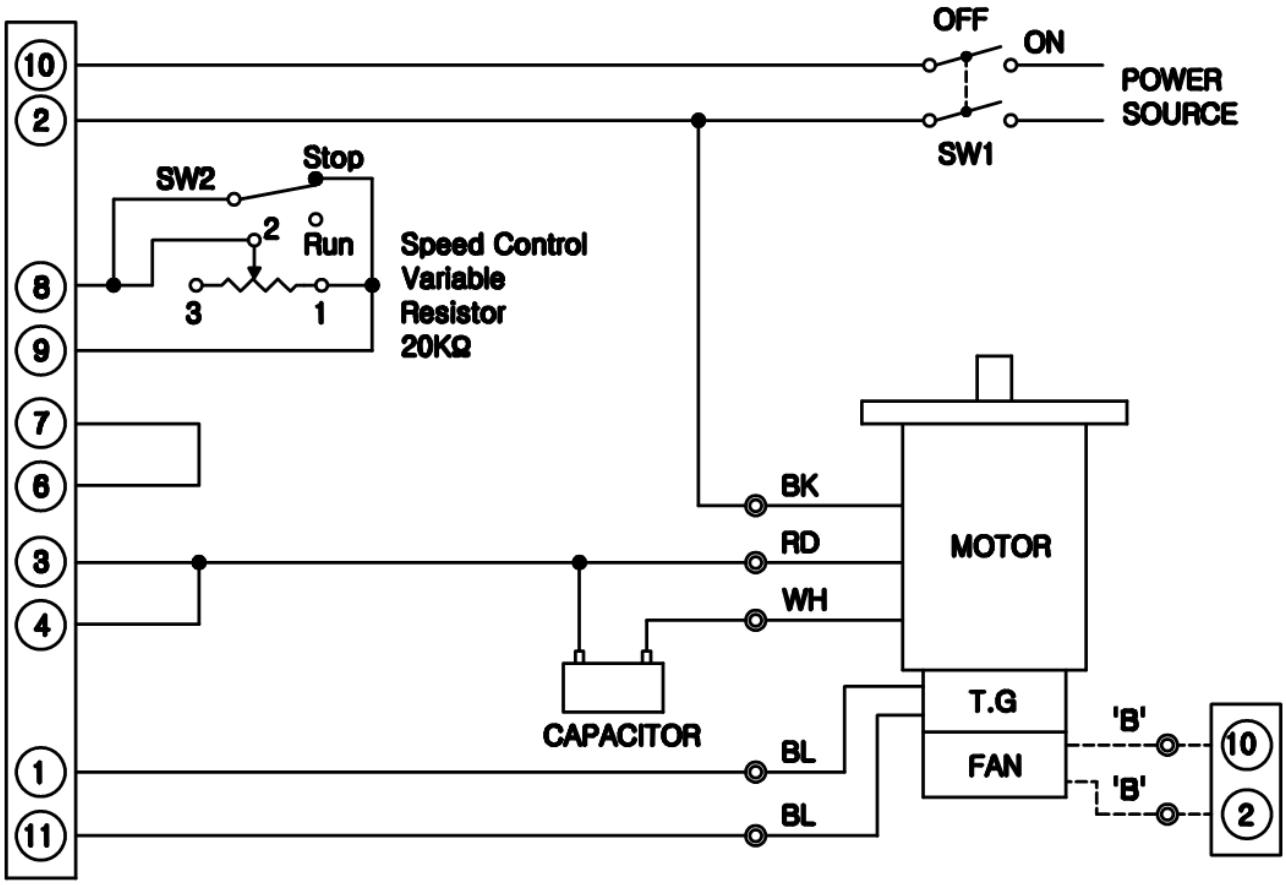


| | |
|---|---|
| SW1 | AC125V or AC250V 5A more |
| SW2 | DC20V 10mA |

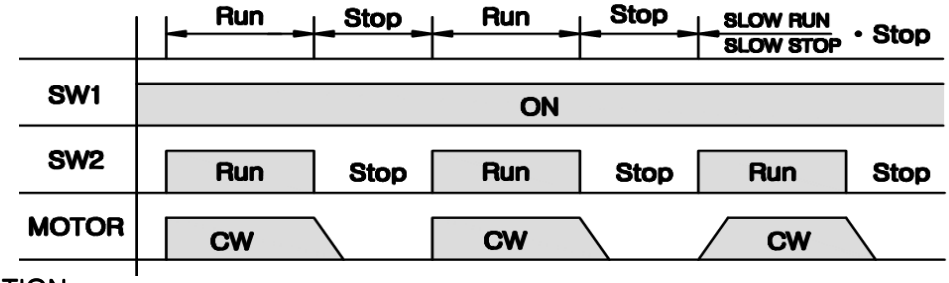


■ CAUTION

1. Direction of rotation of MOTOR is clockwise direction (CW) in view point of the rotating shaft side. In case of counter-clockwise (CCW), exchange red and white color among MOTOR LEAD lines.
2. When wiring more than 60W MOTOR, use after connect FAN MOTOR leader line(Yellow line) to ⑩, ②. ('B' part)
3. Do not use #3 terminal of VR.
   VR : External speed setter(20KΩ 1/4W B attribute value)

6-2 INDUCTION MOTOR에서 In case of operation 「one-way operation + change of speed + braking」 (6W~25W)

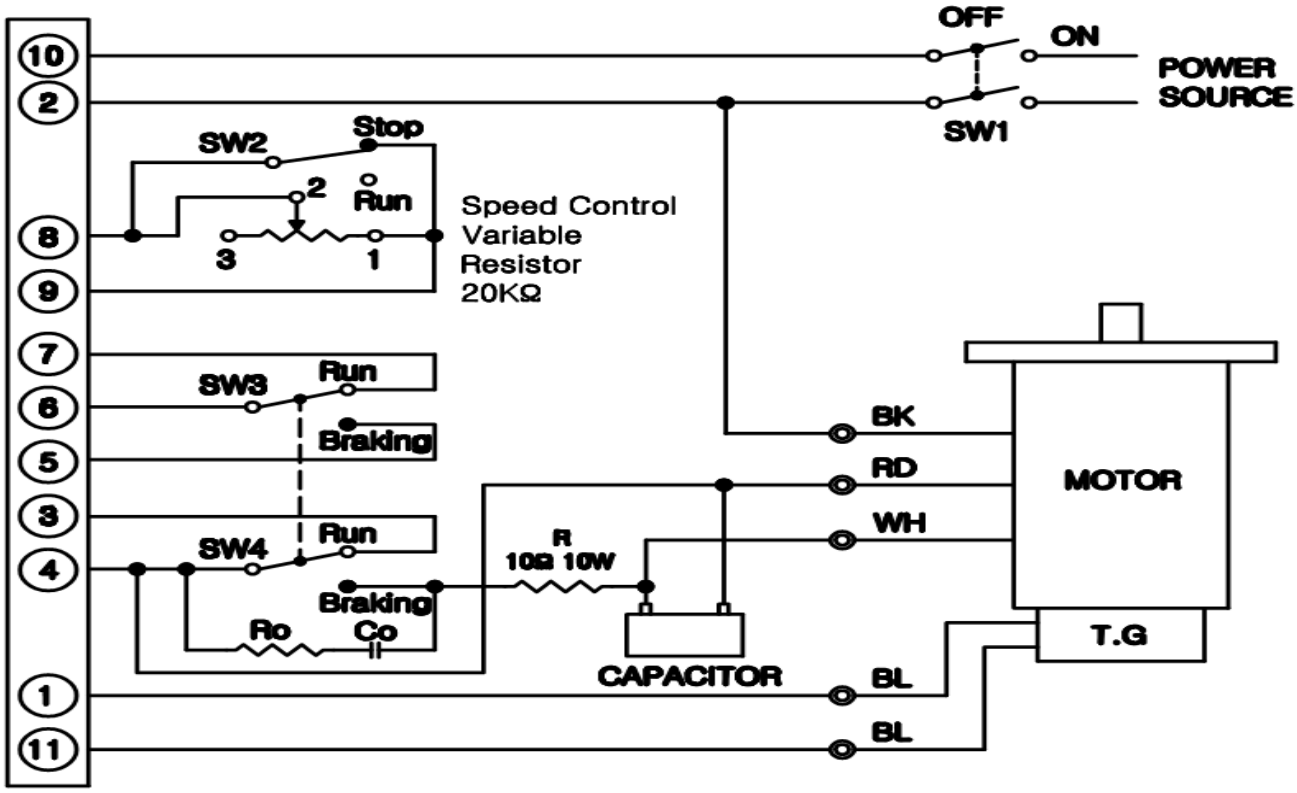


| | |
|---|---|
| SW1, SW4 | AC125V or AC250V 5A more |
| SW2, SW3 | DC20V 10mA |
| Ro, Co | Ro=10~200Ω(1/4W more)<br>Co=0.1~0.2㎌<br>(AC125WV or AC250WV) |
| R : External resistance for braking | 10Ω 10W more |

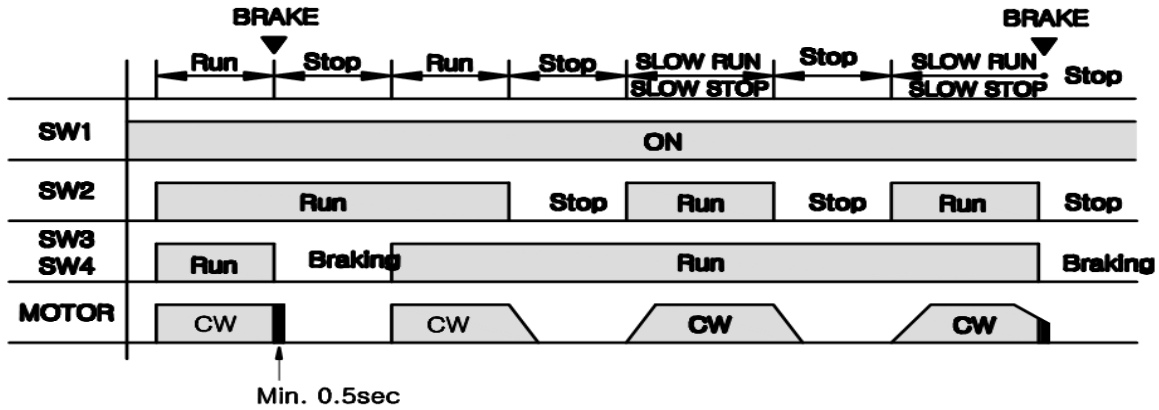


■ CAUTION

1. Direction of rotation of MOTOR is clockwise direction (CW) in view point of the rotating shaft side. In case of counter-clockwise (CCW), exchange red and white color among MOTOR LEAD lines.
2. When wiring more than 60W MOTOR, use after connect FAN MOTOR leader line(Yellow line) to ⑩, ②. ('B' part)
3. Do not use #3 terminal of VR.
   VR : External speed setter(20KΩ 1/4W B attribute value)

6-3. In case of control "one-way operation + change of speed + braking" in INDUCTION MOTOR (40W~180W)

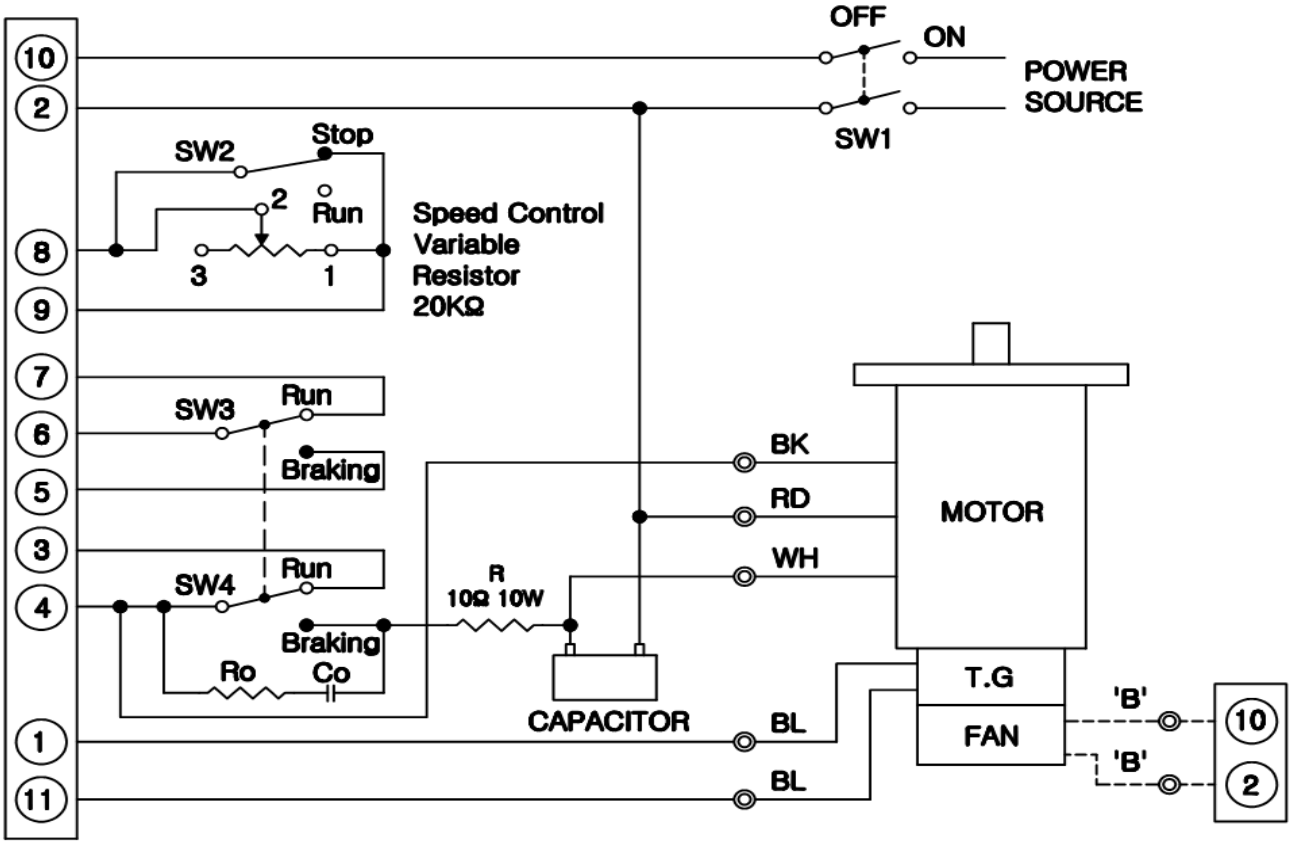


| | |
|---|---|
| SW1, SW4 | AC125V or AC250V 5A more |
| SW2, SW3 | DC20V 10mA |
| Ro, Co | Ro=10~200Ω(1/4W more)<br>Co=0.1~0.2㎌ (AC125WV or AC250WV) |
| R : External resistance for braking | 10Ω 10W more |

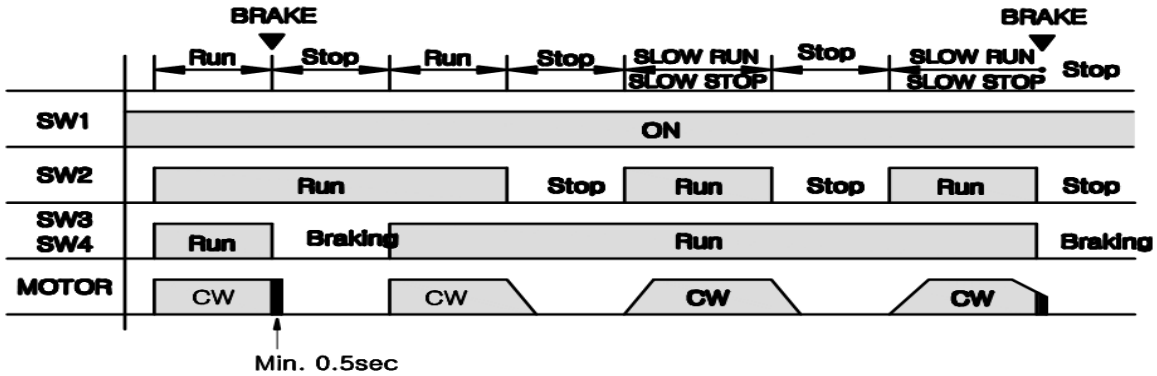


■ CAUTION

1. Direction of rotation of MOTOR is clockwise direction (CW) in view point of the rotating shaft side. In case of counter-clockwise (CCW), exchange red and white color among MOTOR LEAD lines.
2. When wiring more than 60W MOTOR, use after connect FAN MOTOR leader line(Yellow line) to ⑩, ②. ('B' part)
3. Do not use #3 terminal of VR.
   VR : External speed setter(20KΩ 1/4W B attribute value)

6-4. How to Use (INDUCTION MOTOR)

### RUN / STOP function

6-1, 2,In basic electrical wiring of Paragraph 3, if make SW2 to the RUN side, MOTOR rotates by the speed of rotation that was set by external speed setter, and it stops naturally by the inertia if make to Stop side. .

### RUN / braking functions

6-2, At basis electrical wiring of paragraph 3, in state of put SW2 to RUN, if put SW3, SW4 from RUN to BRAKE, MOTOR stops moment by action of BRAKE for 0.5 seconds.

### SLOW RUN. SLOW STOP functions

Through SLOW RUN, SLOW STOP control volume of CONTROL PACK,
Can set MOTOR rotation to accelerate , decelerate slowly.
Setup time increases according to raising volume and SLOW RUN : About 30±5 seconds in Volume MAX, and SLOW STOP : is set about 35±5 seconds. It is impossible to stop SLOW STOP shorter than the time of the natural stop of MOTOR. (Up to 60Hz : 1700 rpm, 50Hz : 1400 rpm standard).

■ CAUTION

1. Do not change the direction of rotation about 3 seconds after stop MOTOR when power is applied and MOTOR stops moment.
2. When not in use for long time turn SW1 OFF to avoid the heat of
CONTROL PACK

## 7. Basic Electrical Wiring (REVERSIBLE MOTOR)

7-1. When operate 「normal/reverse RUN + change of speed」 in REVERSIBLE MOTOR. (6W ~ 90W)

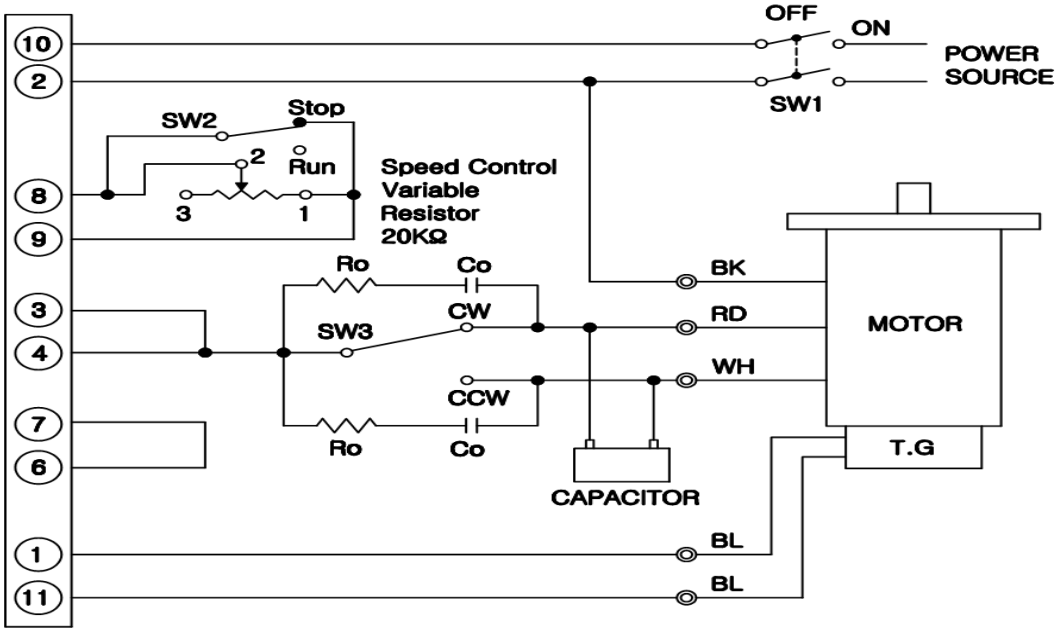

| | |
|---|---|
| SW1, SW3 | AC125V or AC250V 5A more |
| SW2 | DC20V 10mA |
| Ro, Co | Ro=10~200Ω(1/4W more)<br>Co=0.1~0.2㎌ (AC125WV 또는 AC250WV) |
| R : External resistance for braking | 10Ω 10W more |

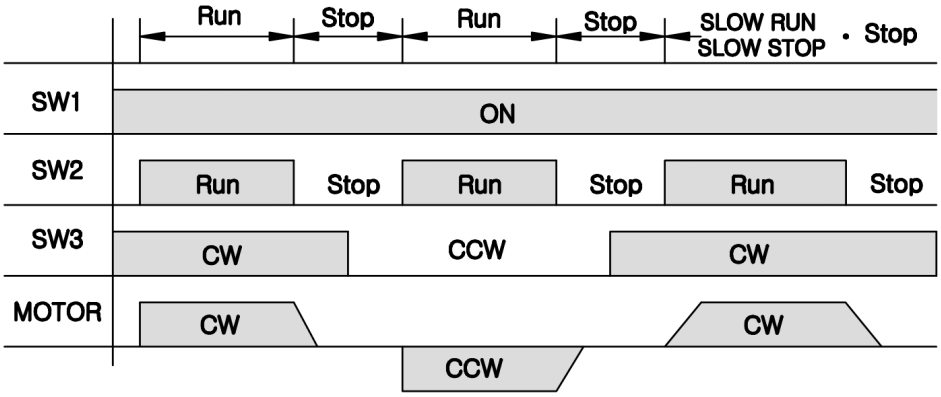


■ CAUTION

1. Do not use #3 terminal of VR.
   VR : External speed setter(20KΩ 1/4W B attribute value)

7-2. In case of operation 「Normal/Reverse Run+change of speed+braking」 in REVERSIBLE MOTOR (6W~25W)

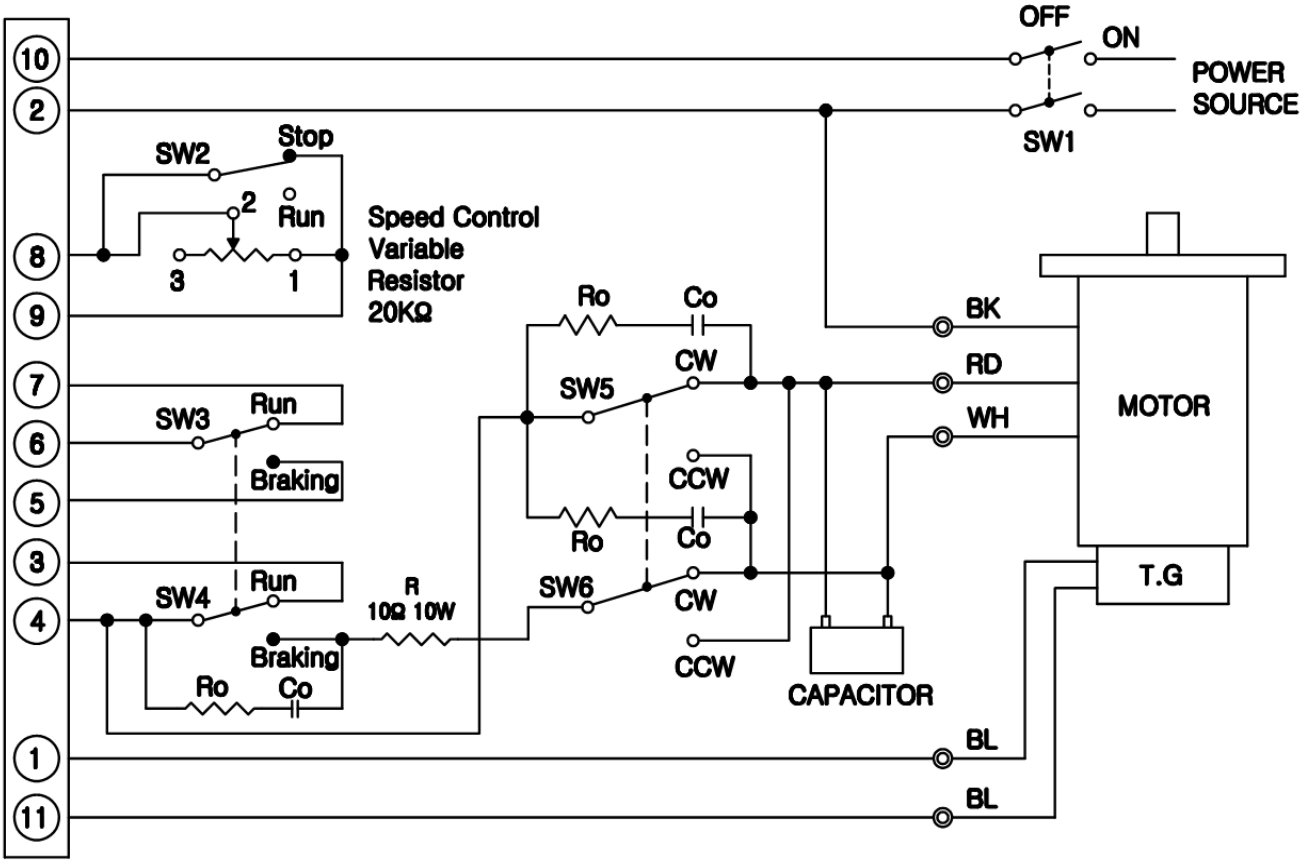

| | |
|---|---|
| SW1, SW4<br>SW5, SW6 | AC125V or AC250V 5A 이more |
| SW2, SW3 | DC 20V 10mA |
| Ro, Co | Ro=10~200Ω(1/4W more)<br>Co=0.1~0.2㎌ (AC125WV or AC250WV) |
| R : External resistance for braking | 10Ω 10W more |

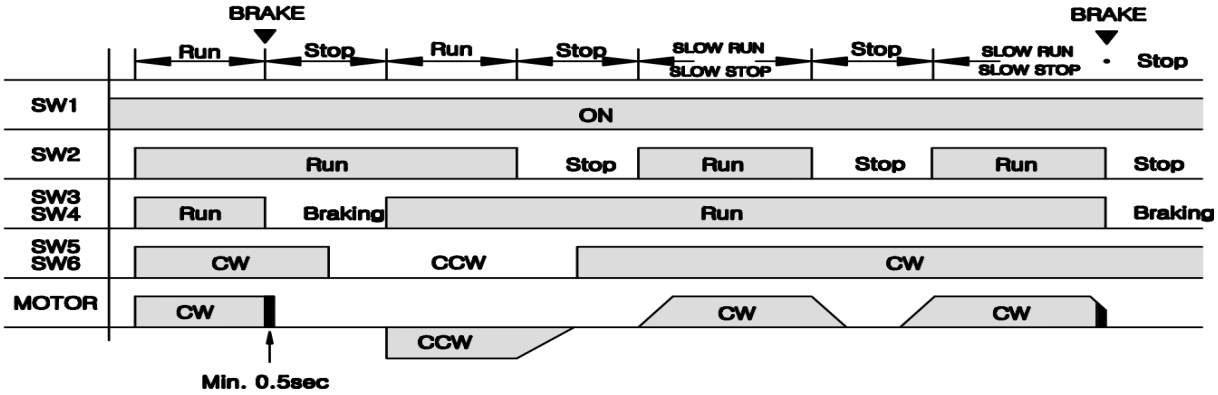


■ CAUTION

1. Do not use #3 terminal of VR.
   VR : External speed setter(20KΩ 1/4W B attribute value)

7-3. In case of operation 「Normal/Reverse RUN + change of speed + braking」 in REVERSIBLE MOTOR(40W ~90W)

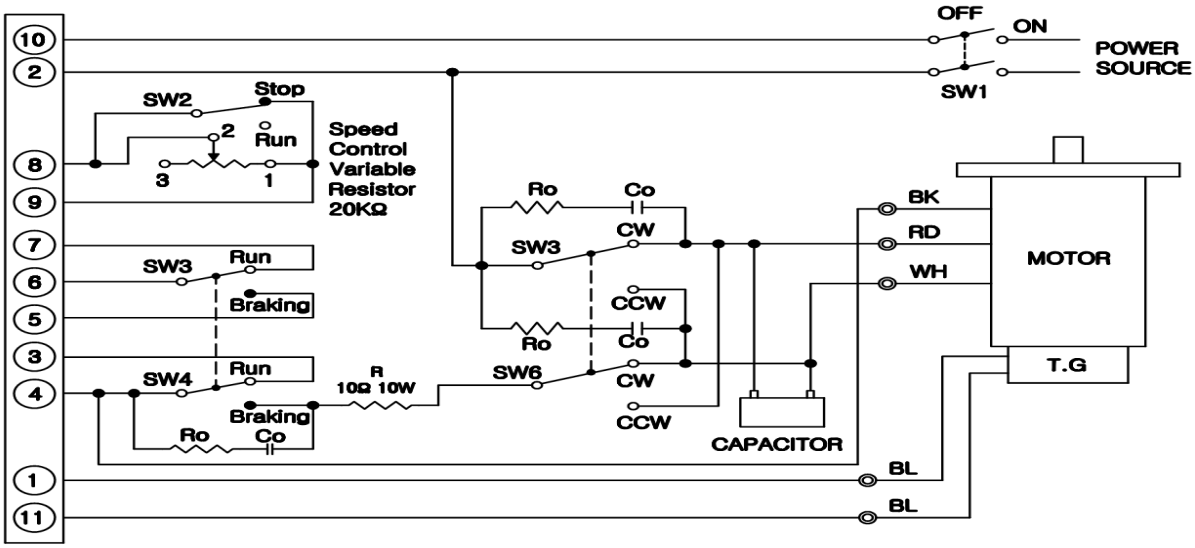


| | |
|---|---|
| SW1, SW4, SW5, SW6 | AC125V or AC250V 5A more |
| SW2, SW3 | DC 20V 10mA |
| Ro, Co | Ro=10~200Ω(1/4W more)<br>Co=0.1~0.2㎌ (AC125WV or AC250WV) |
| R : External resistance for braking | 10Ω 10W more |

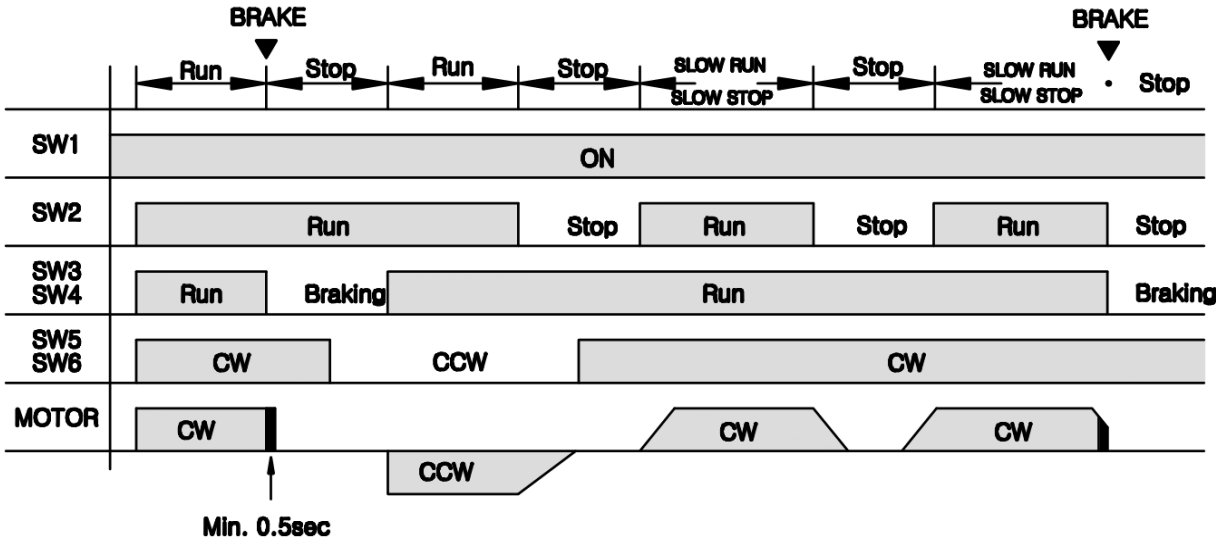


■ CAUTION

1. In connection more than 60W MOTOR, connect FAN MOTOR leader (Yellow line) to ⑩, ② and use.

2. Do not use #3 terminal of VR.
   VR : External speed setter(20KΩ 1/4W B attribute value)

## 7-4. How to Use(REVERSIBLE MOTOR)

### RUN / STOP function

7-1, 2, If put SW2 to RUN in Basic electrical wiring of paragraph 3, MOTOR rotates with the speed of rotation set by external speed setter, and if put to STOP it stops by the natural inertia.

### RUN / braking functions

7-2, In state of put SW2 to RUN side in basic electrical wiring of paragraph 3, if put SW3, SW4 from RUN to BRAKE, MOTOR stops moment by action of BRAKE about 0.5 seconds.

### SLOW RUN / SLOW STOP functions

Through SLOW RUN, SLOW STOP control volume of CONTROL PACK, can set MOTOR rotation to accelerate , decelerate slowly.

Setup time increases according to raising volume and SLOW RUN : About 30±5 seconds in Volume MAX and SLOW STOP : is set about 35±5 seconds. It is impossible to stop SLOW STOP shorter than the time of the natural stop of MOTOR. (Up to 60Hz : 1700 rpm, 50Hz : 1400 rpm standard).

■ CAUTION

1. Do not change the direction of rotation about 3 seconds after stop MOTOR when power is applied and MOTOR stops moment.

2. When not in use for long time turn SW1 OFF to avoid the heat of CONTROL PACK

## 8. Basic Electrical Wiring (SPEED CONTROL BRAKE MOTOR)

8-1. In case of operation 「Normal/Reverse RUN+change of speed+position keeping operation」 in SPEED CONTROL BRAKE MOTOR (6W~180W)

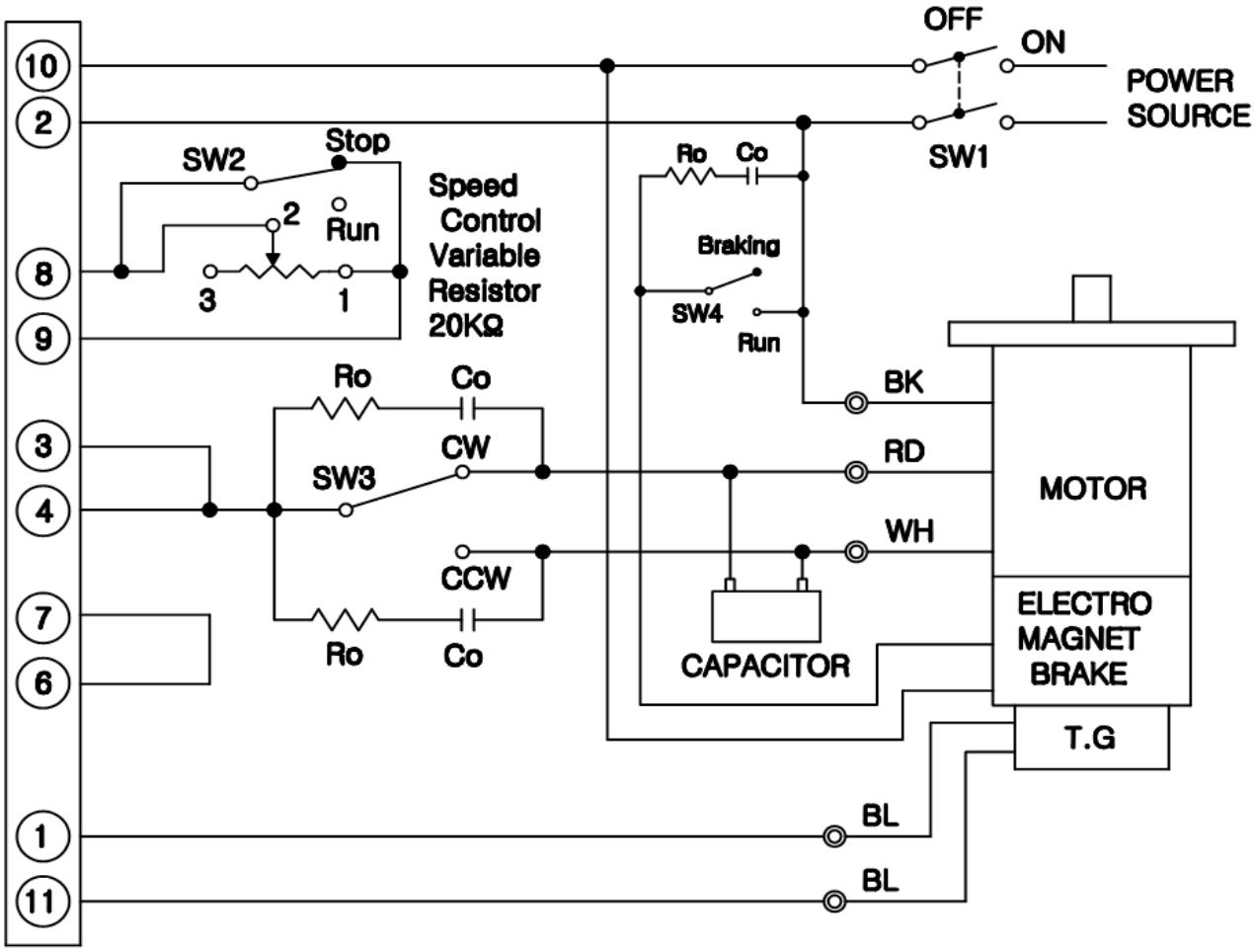


| | |
|---|---|
| SW1, SW3, SW4 | AC125V or AC250V 5A more |
| SW2 | DC 20V 10mA |
| Ro, Co | Ro=10~200Ω(1/4W more)<br>Co=0.1~0.2㎌ (AC125WV or AC250WV) |

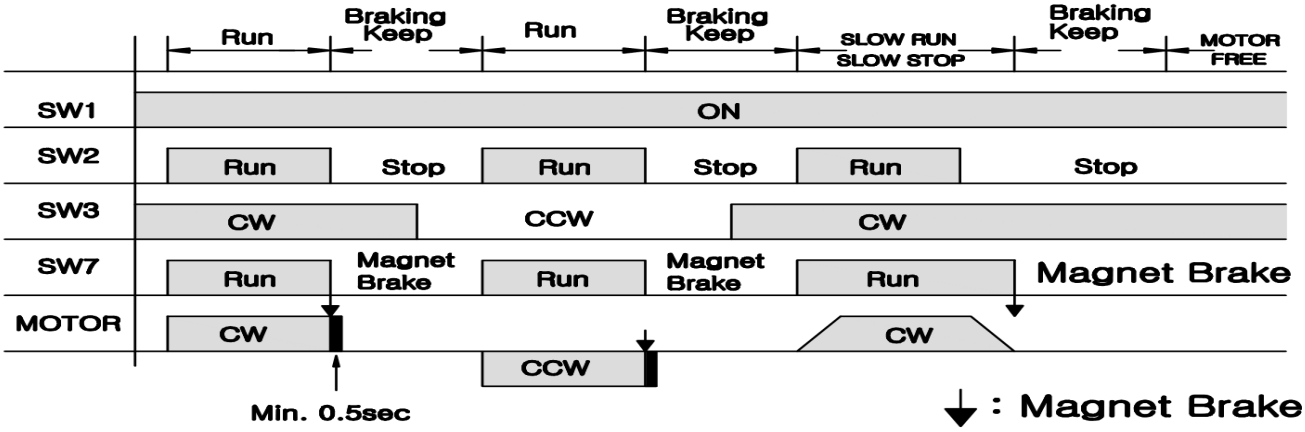


■ CAUTION

1. Do not use #3 terminal of VR.

   VR : External speed setter(20KΩ 1/4W B attribute value)

8-2. In case of operation 「Normal/Reverse operation+change of speed+braking」 in SPEED CONTROL BRAKE MOTOR(6W~25W)

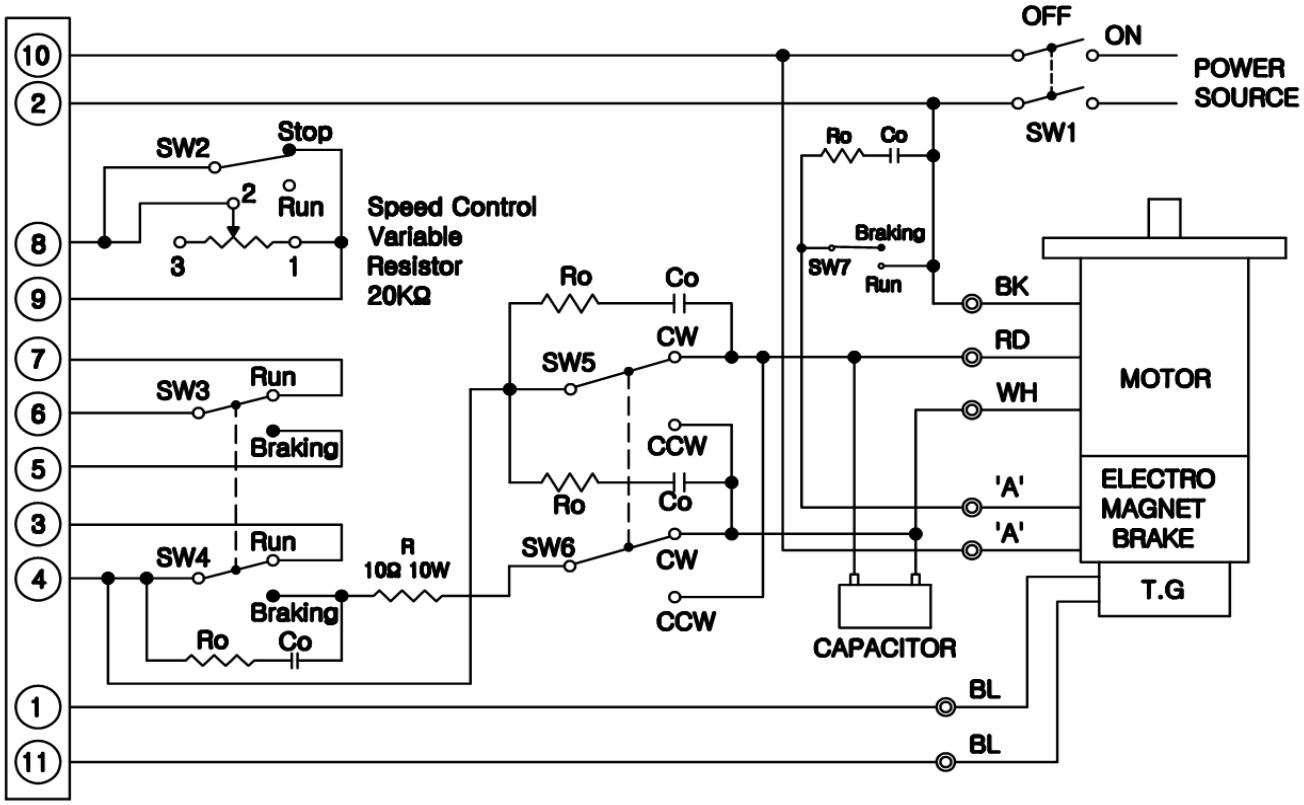


| | |
|---|---|
| SW1, SW4, SW5, SW6, SW7 | AC125V or AC250V 5A more |
| SW2, SW3 | DC 20V 10mA |
| Ro, Co | Ro=10~200Ω(1/4W more)<br>Co=0.1~0.2㎌ (AC125WV or AC250WV) |
| R : External resistance for braking | 10Ω 10W more |

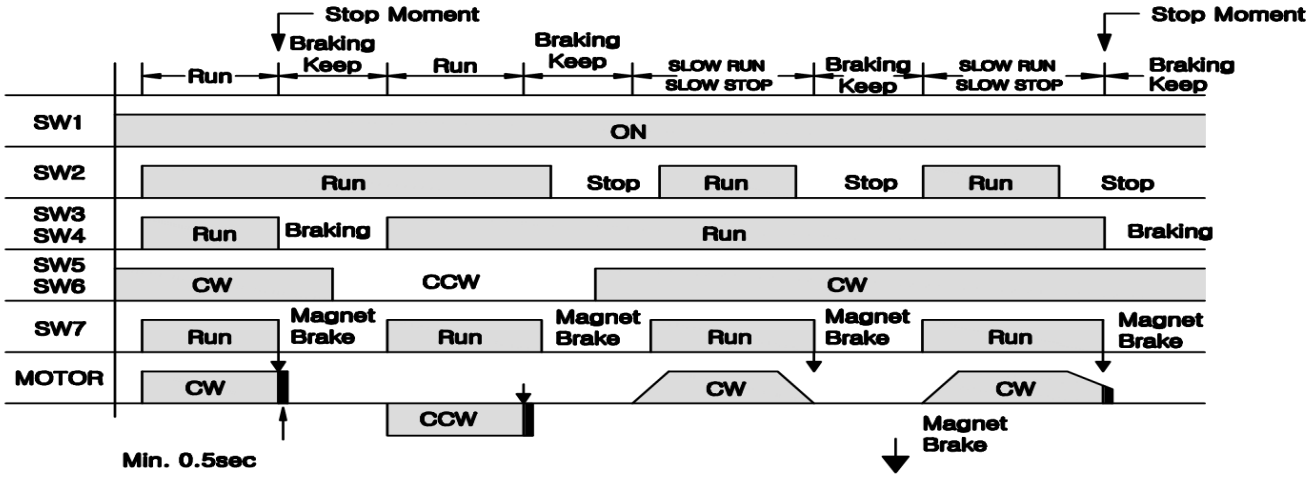


■ CAUTION

1. Do not use #3 terminal of VR.
   VR : External speed setter(20KΩ 1/4W B attribute value)

8-3. In case of ooperation 「Normal/Reverse operation+change of speed+brakin g」 in SPEED CONTROL BRAKE MOTOR (40W ~180W)

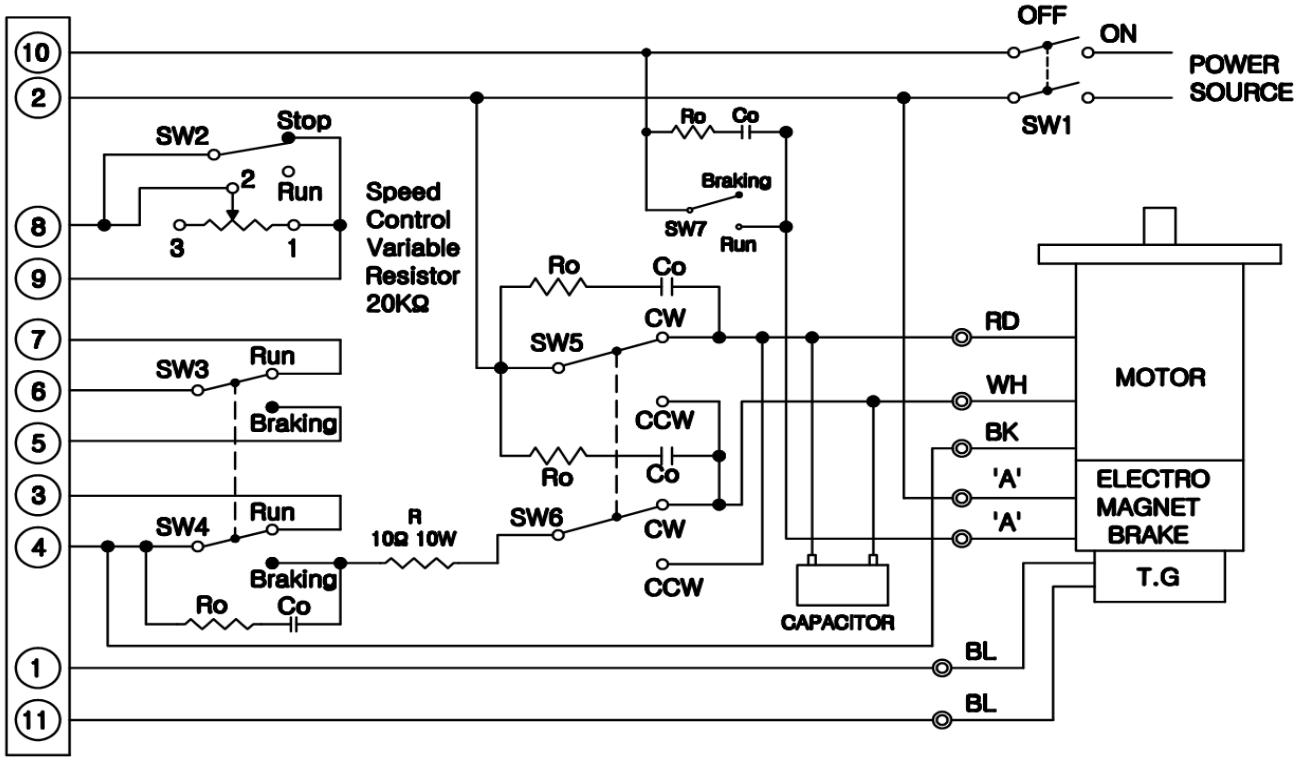


| | |
|---|---|
| SW1, SW4<br>SW5, SW6, SW7 | AC125V or AC250V 5A more |
| SW2, SW3 | DC 20V 10mA |
| Ro, Co | Ro=10~200Ω(1/4W more)<br>Co=0.1~0.2㎌ (AC125WV or AC250WV) |
| R : External resistance for braking | 10Ω 10W more |

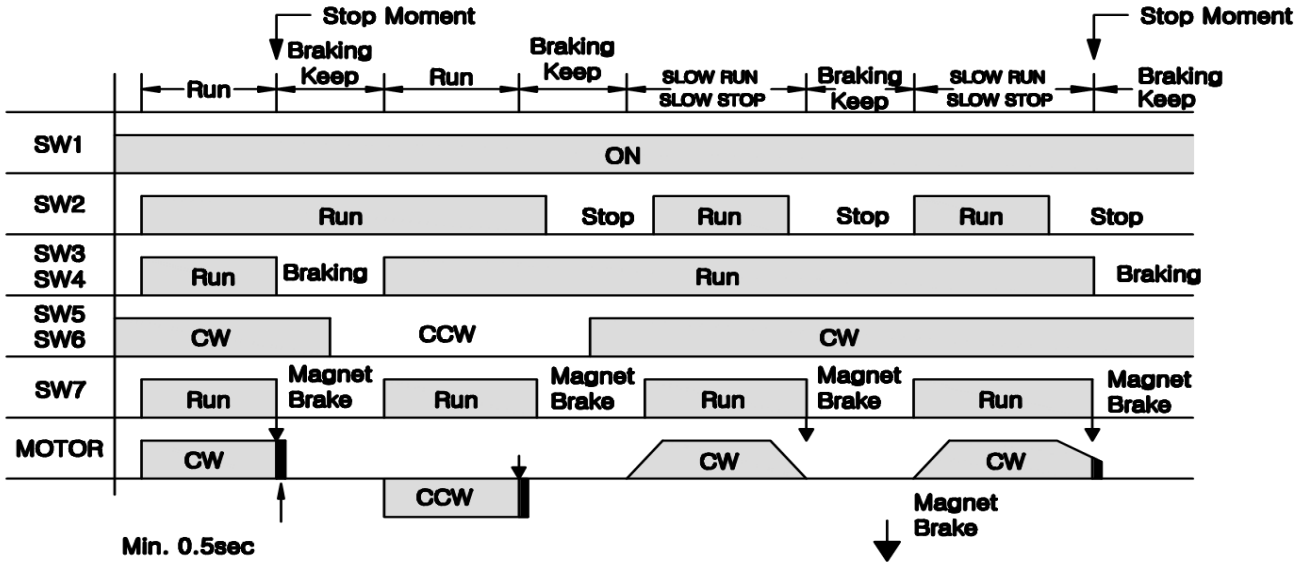


■ CAUTION

1. Do not use #3 terminal of VR.
   VR : External speed setter(20KΩ 1/4W B attribute value)

## 8-4. How to use(INDUCTION MOTOR)

### RUN / STOP function

8-1, 2, If put SW2 to RUN in Basic electrical wiring of paragraph 3, MOTOR rotates with the speed of rotation set by external speed setter, and if put to STOP it stops by the natural inertia.

### RUN / braking functions

8-2, In state of put SW2 to RUN side in basic electrical wiring of paragraph 3, if put SW3, SW4 from RUN to BRAKE, MOTOR stops moment by action of BRAKE about 0.5 seconds.

### SLOW RUN. SLOW STOP functions

Through SLOW RUN, SLOW STOP control volume of CONTROL PACK, can set MOTOR rotation to accelerate , decelerate slowly.

Setup time increases according to raising volume and SLOW RUN : About 30±5 seconds in Volume MAX and SLOW STOP : is set about 35±5 seconds. It is impossible to stop SLOW STOP shorter than the time of the natural stop of MOTOR. (Up to 60Hz : 1700 rpm, 50Hz : 1400 rpm standard).

■ CAUTION

1. Do not change the direction of rotation about 3 seconds after stop MOTOR when power is applied and MOTOR stops moment.
2. When not in use for long time turn SW1 OFF to avoid the heat of CONTROL PACK

## 9. Basic Electrical Wiring (Parallel operation)

As like the following wiring diagrams, high power GSA TYPE is multiplepossible Parallel operation that can set speed control setting MOTORs at the same time same speed by one variable resistor for speed setter.

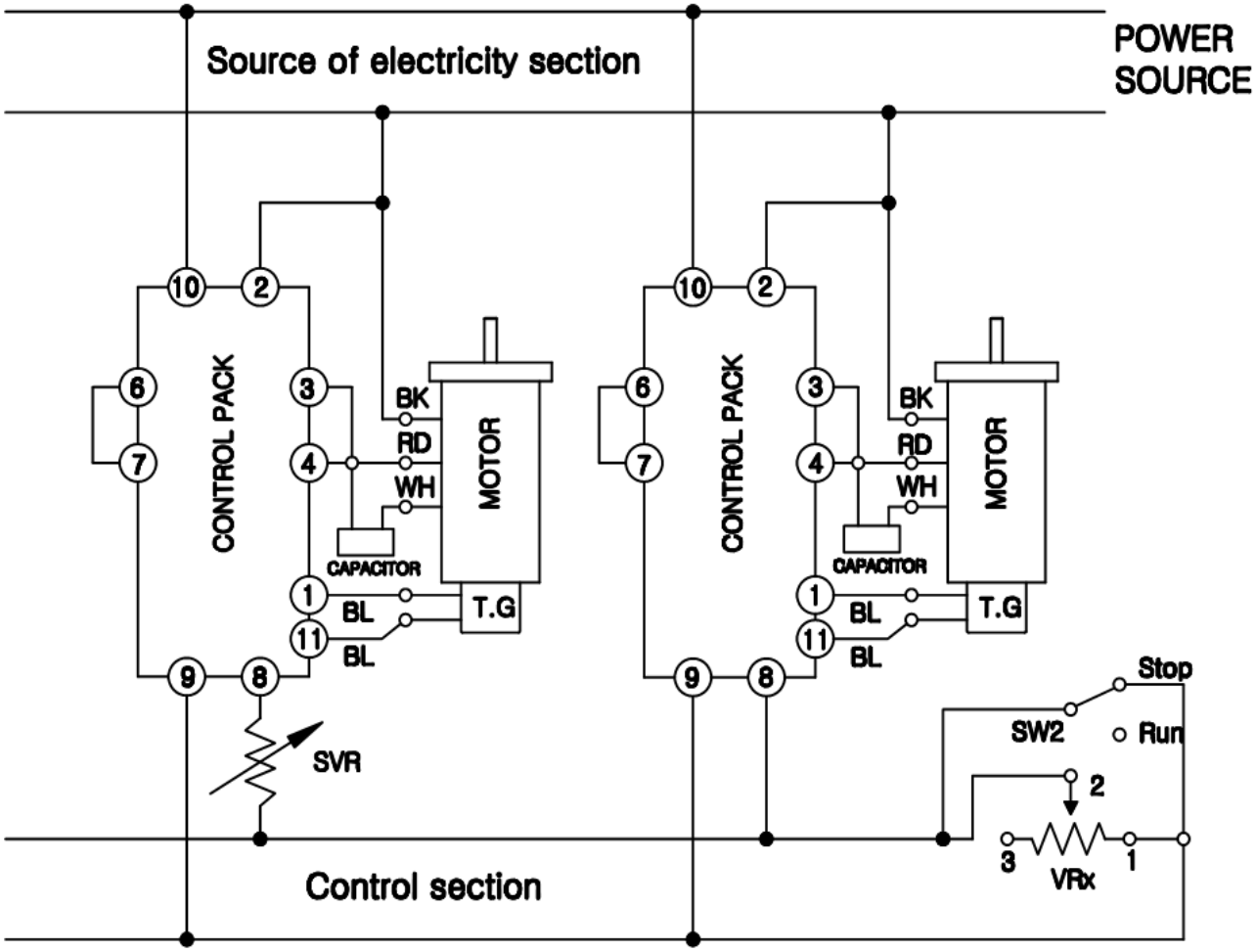


As like the above diagrams, wire Power Supply(Terminal number ②, ⑩) and Controls (Terminal number ⑧, ⑨) in each equal line.

Even in case combination of other MOTOR and CONTROL PACK, can do parallel operation equalizing Power Suppl and Controls.

■ CAUTION

1.For Power supply and control unit, lay wiring as same PIN number respectively.

2. The capacity of the speed control variable resistor can obtain as following.
   VRx=20/N KΩ, N/4 W (N : quantity of MOTORs)
   ex.)in case MOTOR is 2 units it is 10KΩ 1/2W

3. Each MOTOR rates almost the same speed, but will cause some errors by difference of load and variation of the product.

To prevent such a phenomenon, prepare variable resistor for fine control (SVR)to terminal number ⑧ about 5-10% resistivity of variable resistor (VRx) for speed setting, Capacity 1/4W.

## 10. The temperature rise of MOTOR

Pressure of AC SPEED CONTROL MOTOR is increased depending on the amount of the load that MOTOR temperature rises more according to load..

It is called Use Limit Curve that MOTOR temperature rise, limit TORQUE and rpm were obtained from it, and use MOTOR in TORQUE rpm of under the curve.

In following occasion, can use more TORQUEs moving Useful Limit Curve to the Top.

- Occasion that thermally effect is good
- In case of cooling by FAN
- Occasion that ambient temperature is low

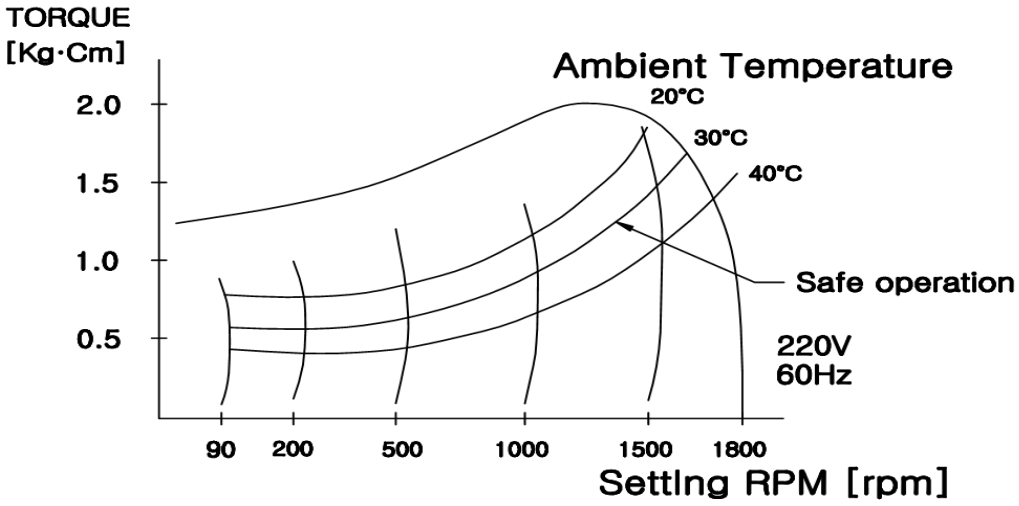


■ CAUTION

Use in less than 90 ℃ of surface temperature of MOTOR case.

## 11. Application of electrical wiring

- Control Panel

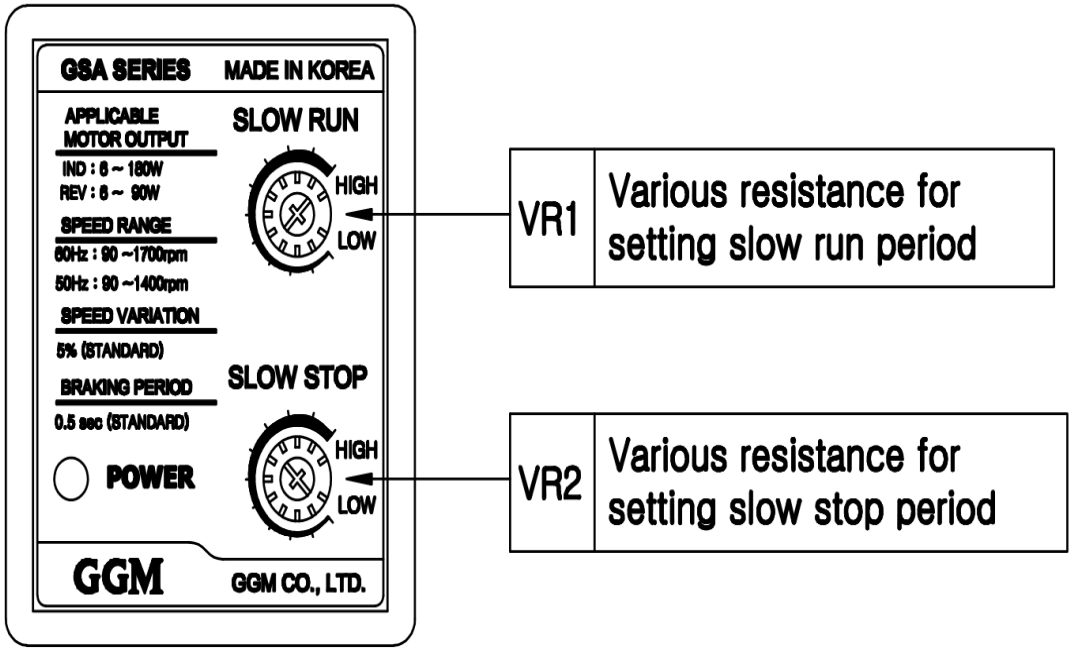

## - In case of control rpm by external DC voltage

In case of set MOTOR speed by external DC power supply instead of an external variable resistor for speed setting that is attached to the product, connect DC power supply and CONTROL PACK as follows.

(However, use isolated line certainly for the DC power output and the AC input, and take care not to chage polarity.)

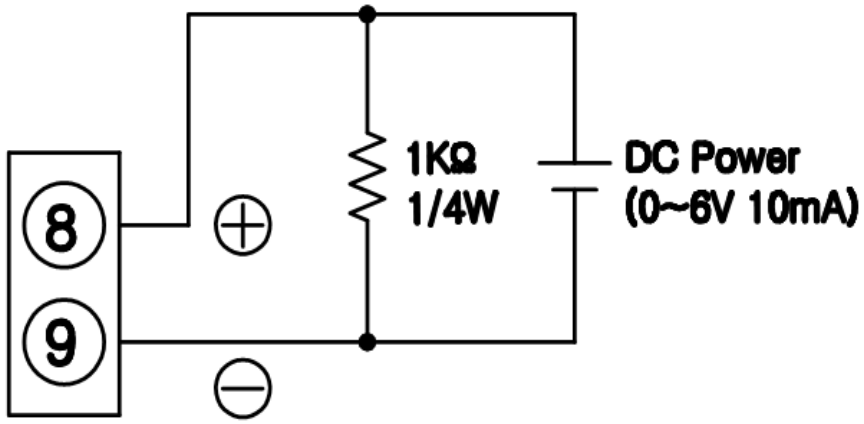


(Wiring Diagram in case of control the speed by external DC voltage)

## - Multistage switching method of rpm

1. In case of need multi-speed control, set VR1, VR2, VR3 respectively and can be switched speed by the SW1, SW2, SW3.

Set switching time of SWITCH by RELAY contact point switching time

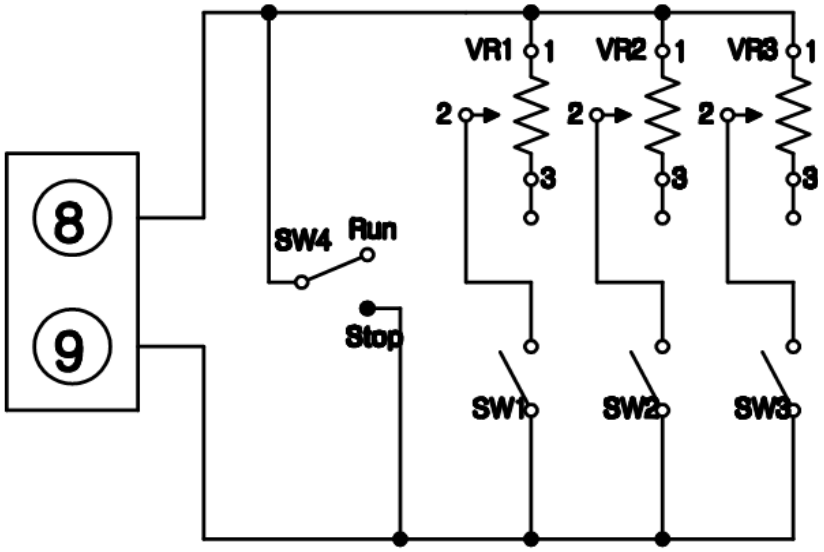


| | |
|---|---|
| VR1, VR2, VR3 | 20KΩ 1/4W B characteristics |
| SW1, SW2, SW3, SW4 | DC 20V 10mA |

2. There is contained 1 SET of VOLUME for external setting in CONTROL PACK package BOX. If you need to purchase more of our products, please purchase separately.

## -How to set quick operating time

It takes time until to start motor rotation after put RUN/STOP switch to RUN according to become slow speed of set in motor. In case of low setting run time is an issue, connect variable resistor VRT to adjust operation time refferring folllowing circuit.

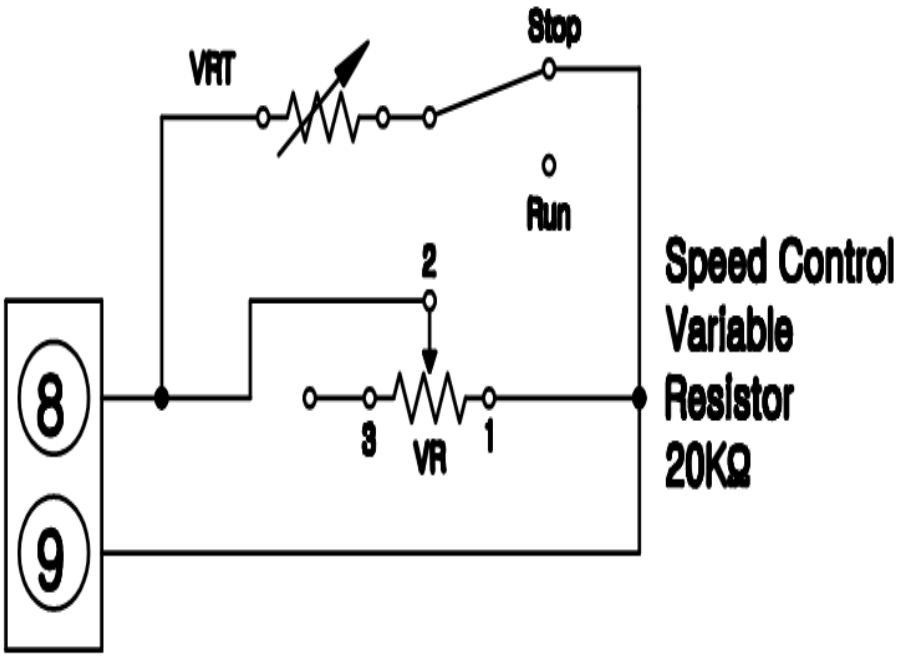


| | |
|---|---|
| VRT | 2KΩ 1/4W B attribute value |
| SW2 | DC 20V 10mA |

* In case of Stop Moment, use linking Run/Braking switch and Run/Stop switch of above circuit.

* In state of put RUN/STOP switch to Stop sid, adjust the VRT just before MOTOR starting.

## 12. Use of SLOW RUN, SLOW STOP

There arefunctions SLOW RUN that is accelerated gradually up to the speed of set and SLOW STOP that is decelerated up to the speed of set in GSA TYPE.

Use these functions when want smooth acceleration and deceleration by relieve the shock at Start and Stop.

Time setting of SLOW RUN and SLOW STOP is available in range of SLOW RUN about 35±5 seconds, SLOW STOP : about 35±5 seconds / 1700rpm(60Hz), 1400rpm (50Hz) by variable resistor inside CONTROL PACK.

* It is impossible to stop SLOW STOP shorter time than natural stop of MOTOR.

* In case of need not SLOW operating, turn internal VOLUME to left (counterclockwise) up to end.

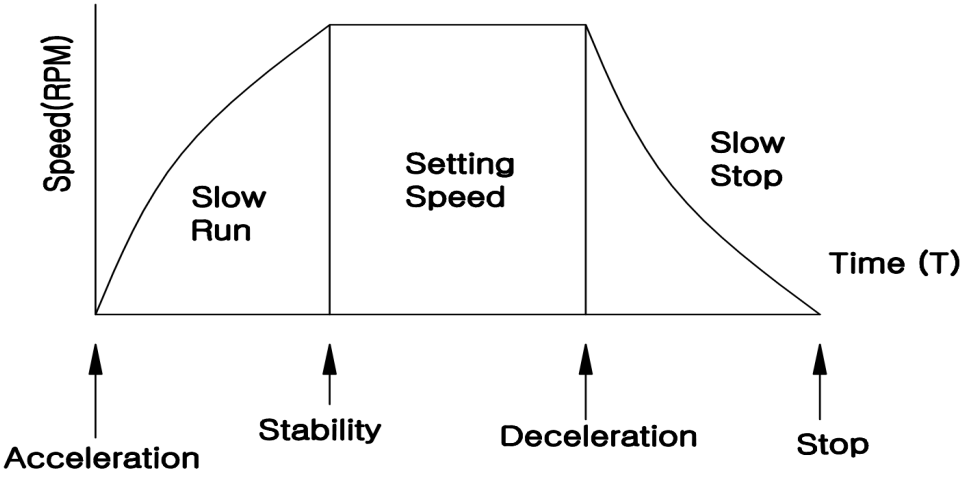


## 13. Moment Stop Characteristics

There is electric brake function in CONTROL PACK that can make stop moment MOTOR during operation in a short time of 0.1 seconds.

Braking current works about 0.5 seconds and thereafter will automatically turn off.

There is no retention power catching MOTOR that is possible to adjust desired location only after stop. In case of need retention power to stop object moving up and down,
select our CONTROL MOTOR mounted electronic brake.

■ CAUTION

1. In CONTROL PACK, takes about 0.5 seconds to run MOTOR after turning switch for braking after operating Moment Stop.

2. In CONTROL PACK, if set Speed control variable resistor by 0Ω or stop moment in state of put switch to RUN/STOP and then put it to RUN, Motor may run about one rotation that avoid such operations.

In addition, if repeat RUN/STOP switch in AC power within 0.5 seconds, MOTOR may run moment rotaion that avoid RUN/STOP in AC Power Terminal..

3. Required stop time is more than 3 seconds in order for stabilized restart after Moment Stop.

## 14. Causes and Countermeasures of Failure

| Anomalies | Checklist | Breakdown Part Decision | Countermeasures |
|---|---|---|---|
| MOTOR does not rotate. | Remove PACK from SOCKET and Connect ④, ⑩ terminal of SOCKET | If MOTOR rotates, it is speed setting part or CONTROLLER part | Check connection with variable resistor for speed setting |
| | | If MOTOR does not rotate, it is MOTOR part | ·Check MOTOR connection part<br>·Check CONDENSER connection for MOTOR |
| | Mount PACK on SOCKET and open ⑧, ⑨ terminal of SOCKET | If MOTOR rotates by maximum speed, it is speed setting part | ·Check connection with Variable resistor for speed setting<br>·Check connection with RUN/STOP switch part |
| | | If MOTOR does not rotate, it is MOTOR part | ·check connection part with MOTOR |
| MOTOR rotates at maximum speed. | Remove PACK from SOCKET and approve AC power | If MOTOR does not rotate, it is speed setting part or CONTROLLER part | ·check connection with Variable resistor for speed setting |
| | | If MOTOR rotates, it is MOTOR part | ·check connection part with MOTOR |
| | Mount PACK on SOCKET and connect ⑧, ⑨ terminal of SOCKET | If MOTOR stops, it is speed setting part | ·check connection with Variable resistor for speed setting<br>·check run/stop switch connection part<br>check connection of ①, ⑪ terminal |
| | | If MOTOR does not stop, it is CONTROLLER part | |

| Anomalies | Checklist | Breakdown Part Decision | Countermeasures |
|---|---|---|---|
| MOTOR is not shifted. | CHECK voltage between ①, ⑪ | If is more than AC 20V, it is speed | ·check connection with variable resistor for |

| | | | |
|---|---|---|---|
| | terminal of SOCKET after set external speed setter by maximum | setting part or CONTROLLER part | speed setting |
| | | If it is less than AC 20V, it is TACHO part | ·check connection of ①, ⑪ terminal<br>check about 1.6KΩ resistance as one TACHO unit |
| | CHECK voltage between ⑧, ⑨ terminals when operate external speed setter to change | If is changed in interval of DC 0~6V, it is speed setting part | · check connection of Variable resistor for speed setting<br>check connection of RUN/STOP switch<br>· check whether Variable resistance for speed setting is changed from 0 up to 20KΩ |
| | | If is not changed in interval of DC 0~6V, it is CONTROLLER part | |
| MOTOR does not stop immediately . (Moment stop characteristics) | | | ·check External resistance 10Ω 10W connection<br>·check connection of RUN/BRAKING switch |

※ Please contact your dealer or our 2nd factory for Product inquiries and A/S request

Leader of Geared Motors.
GGM CO.,LTD.
http://www.ggm.co.kr

Head Office / 1st Factory
327-3 Songnae-dong, Sosa-gu,
Bucheon-si, Gyeonggi-do, Korea
TEL : +82-32-664-7790
FAX : +82-32-611-7791

2nd Factory
272-11 Dodang-dong, Wonmi-gu,
Bucheon-si, Gyeonggi-do, Korea
TEL : +82-32-684-7791
FAX : +82-32-683-5059