FLOW NOZZLES - 3

IN THIS CHAPTER - 3

Here is introduce the measuring primary devices of fluid flow by means of the differential pressure that is flow nozzles to use at high pressure and temperature than the orifice plate. and the VENTURI-NOZZLE also is include herein.

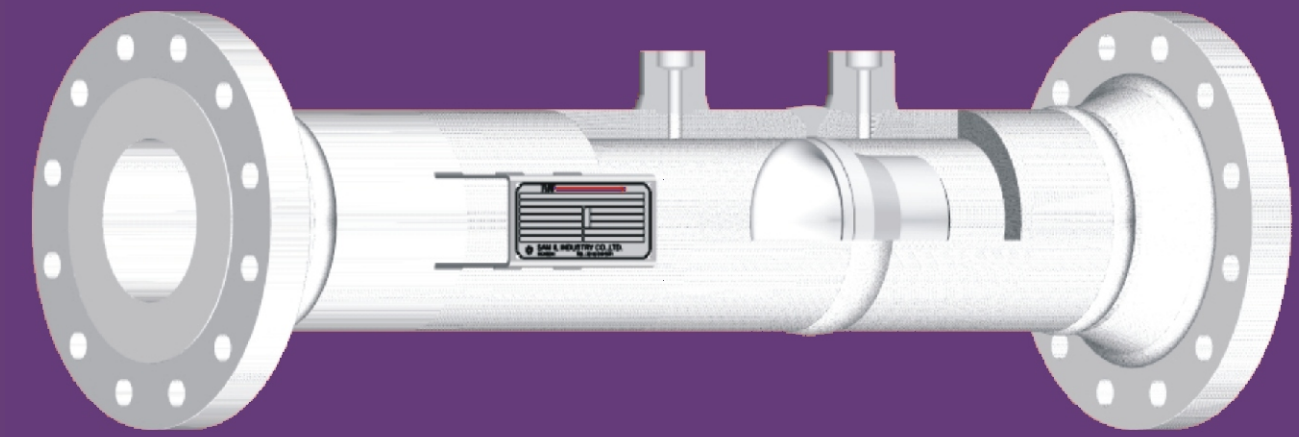

FLOW NOZZLES

SAM IL INDUSTRY CO.,LTD.

GENERAL DESCRIPTION

This is suitable for determining the flow rate of fluid flowing at high pressure and high temperature and is permit approximately 60% greater capacity than the orifice plate.

The principle of the method of measurement is based on the installation of a nozzle in to a pipeline in which a fluid is running full. The installation of the primary device causes a static pressure difference between the upstream side and the throat. The flow rate can be determined from the measured value of this pressure difference.

The flow nozzles, more costly than other orifice due to their construction, are suited for determining the flow rates of fluids flowing at high temperature and high pressure. Under the same measuring conditions, a flow nozzle has a higher mechanical strength, can permit the flow of more than 60 percent greater volume of a fluid, and can measure the flow rates of fluid containing solid particles less disturbed, than an orifice having the same bore. Thus, they are suited, in addition, for high-speed flowing fluids. We can offer only nozzles as well as flow nozzle assemblies having welded short pipe on both their upstream[4D] and downstream[2D] sides.

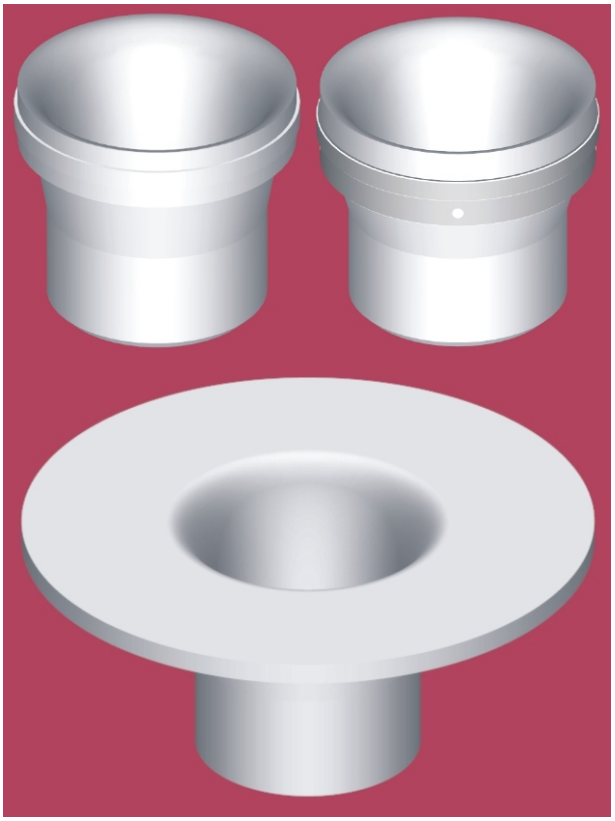

Other Types are available on request in full compliance with ISO-5167[Including ISA 1932 Nozzles], Venturi-Nozzles, ASME MFC-3M, ASME PTC-6 STANDARDS.

SPECIFICATIONS

■ ISO-5167 Nozzle Types : Long Radius Nozzles is
1. High Ratio : $0.25 \leq \beta \leq 0.8$
2. Low Ratio : $0.2 \leq \beta \leq 0.5$
ISA 1932 Nozzle, Venturi-Nozzle

■ ASME MFC-3M, ASME PTC-6 Nozzle Types :
1. High Ratio : $0.5 \leq \beta \leq 0.8$
2. Low Ratio : $0.2 \leq \beta \leq 0.5$
3. Low Ratio, with Throat Tap : $0.25 \leq \beta \leq 0.5$

■ Pressure Taps : Pipe Wall Taps at D & D/2, Throat Tap.

■ Throat Calculation Codes : ISO-5167, ASME MFC-3M, L.K.SPINK., AGA NO.3.

■ Construction Types : Weld-In Type
: Holding Ring Type
: Knock Pin Type
: Flanged Type.

■ End Connection : Butt- Welds Type
: Flanged Type.



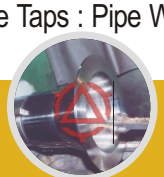

NOZZLE TYPE - ISO 5167

SAM IL will offer all flow nozzle types as per in full compliance with ISO-5167 standard and there are two types of long radius nozzle, which are called :

- High Ratio Nozzles and Low Ratio. For β-Values Between 0.25 and 0.5, either design may be used. and ISA-1932 Nozzle, Venturi-Nozzle.

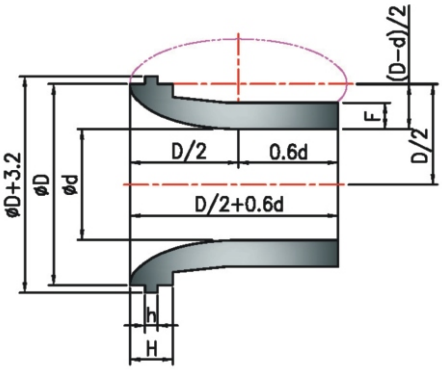

Flow Nozzles are suitable for determining the flow rate of fluids at high temperature and high pressure. and also can measure the flow rate of fluids containing a little amount of solid particles with less inconvenience than an orifice.

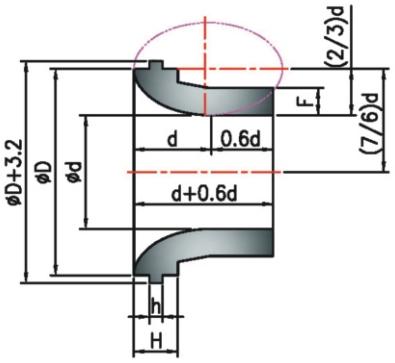

3 ≤ H ≤ 0.15D
3 ≤ F

[A] High Ratio 0.25 ≤ β ≤ 0.8

3 ≤ H ≤ 0.15D
3 ≤ F

[B] Low Ratio 0.2 ≤ β ≤ 0.5

NOZZLE TYPE - ASME MFC-3M

SAM IL will offer all flow nozzle types as per in full accordance with ASME MFC-3M for all below types and aslo ASME PTC 6 for Throat Tap and there are 3 types of long radius style ASME flow nozzles covered by this standard.

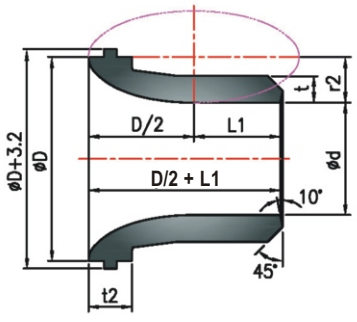

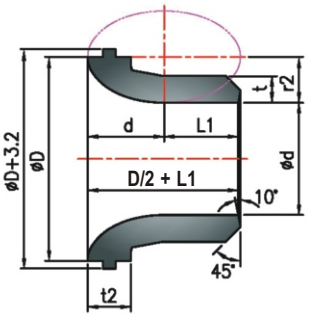

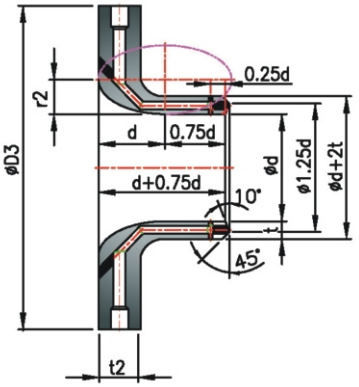

0.5 ≤ β ≤ 0.8
L1 ≤ 0.6d or ≤ D/3
r2 = (D-d)/2
2t ≤ D-(d+6mm)
3mm ≤ t2 ≤ 0.15D

[A] High β Nozzle

0.2 ≤ β < 0.5
0.6d ≤ L1 ≤ 0.75d
0.63d ≤ r2 ≤ 0.67d
3mm ≤ t ≤ 12mm
3mm ≤ t2 ≤ 0.15D

[B] Low β Nozzle

0.25 ≤ β < 0.5

0.63d ≤ r2 ≤ 0.67d
t= 0.25d
t2 = 38mm

[C] Low β Nozzle, with Throat Tap



FLOW NOZZLES

SAM IL INDUSTRY CO.,LTD.

FLANGED TYPE FLOW NOZZLE

This is mounted to insert between piping flanges.
Flow Nozzle is designed in accordance with ISO 5167 and ASME specifications.

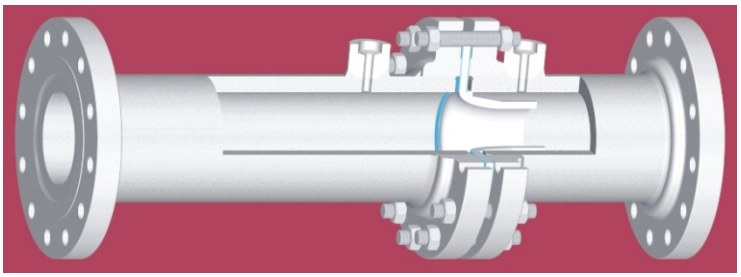

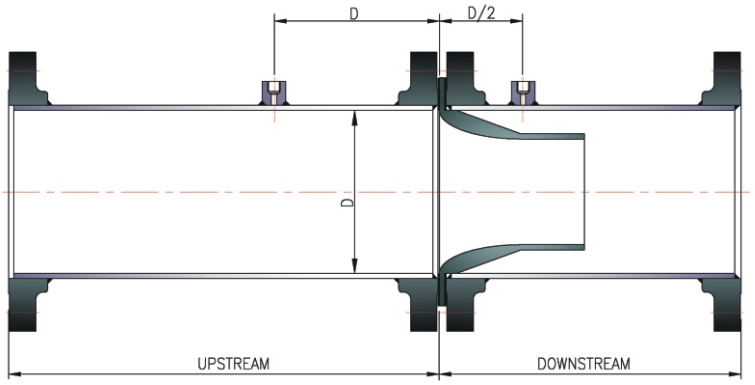

WELD-IN TYPE FLOW NOZZLE

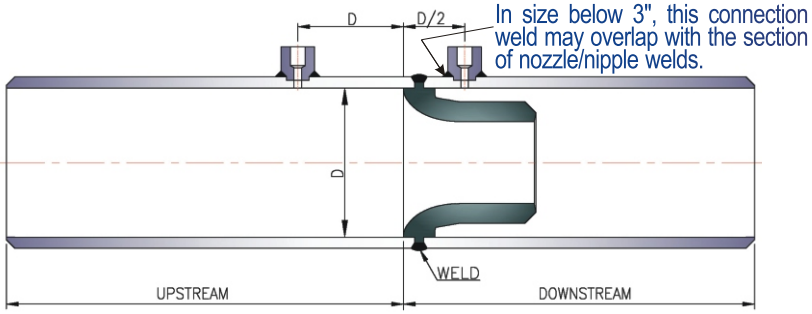

This type weld-in flow nozzle is used where flanges are not applicable such as high temperature and high pressure applications.
As **SAM IL** standard, unless otherwise specified, **SAM IL** will offer this type.

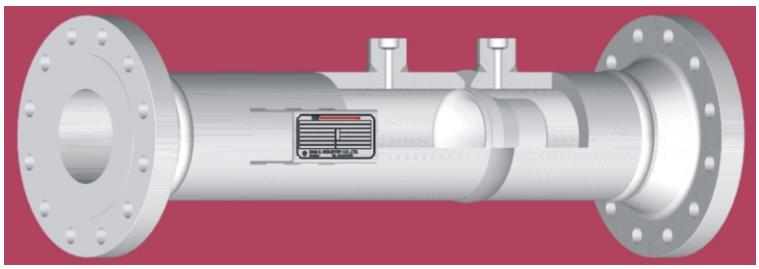



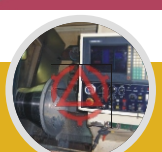

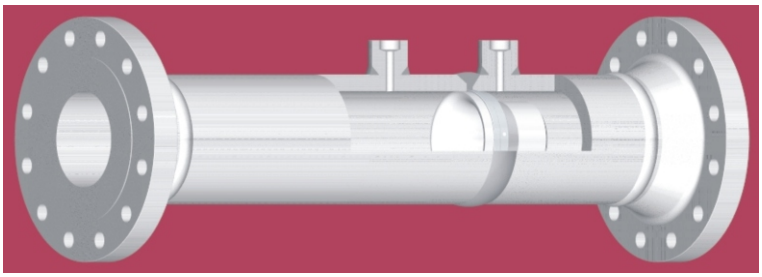

HOLDING RING TYPE FLOW NOZZLE

This type holding ring flow nozzle eliminate the welding of dissimilar materials[=for avoiding the welding operation between two kind of materials] because the ring , pins and pipe are of compatible materials.

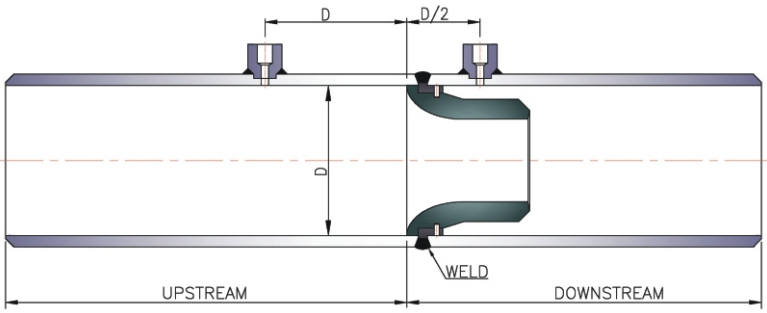

KNOCK-PIN TYPE FLOW NOZZLE

This Nozzle type also avoid welding operation between dissimilar materials however, they have rather difficult to assemble the nozzle from piping.
This type should basically be boring operation due to its structure.

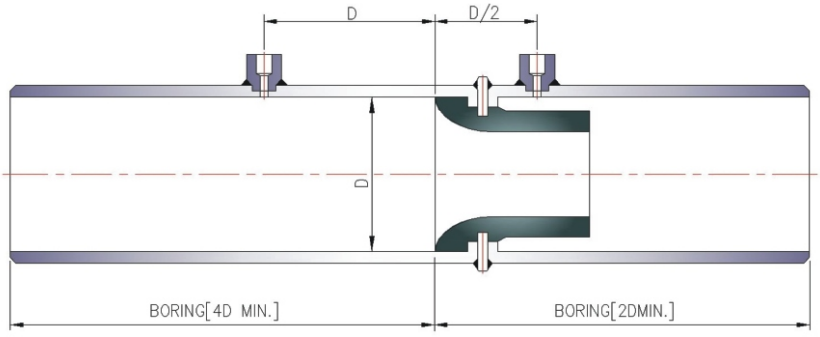

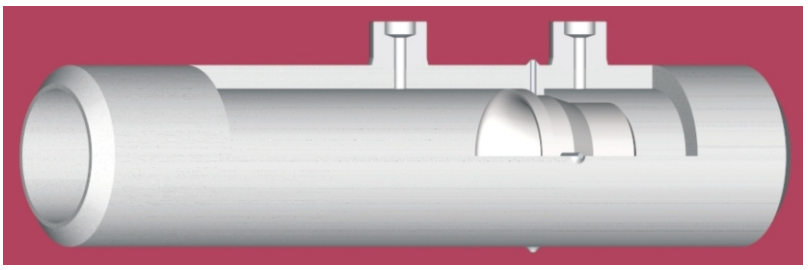

TYPICAL CONSTRUCTION OF FLOW NOZZLE WITH THROAT TAP [ASME PTC-6 STANDARD].

for welded assembly, Inspection port assembly may be installed as per PTC-6 std. on request.

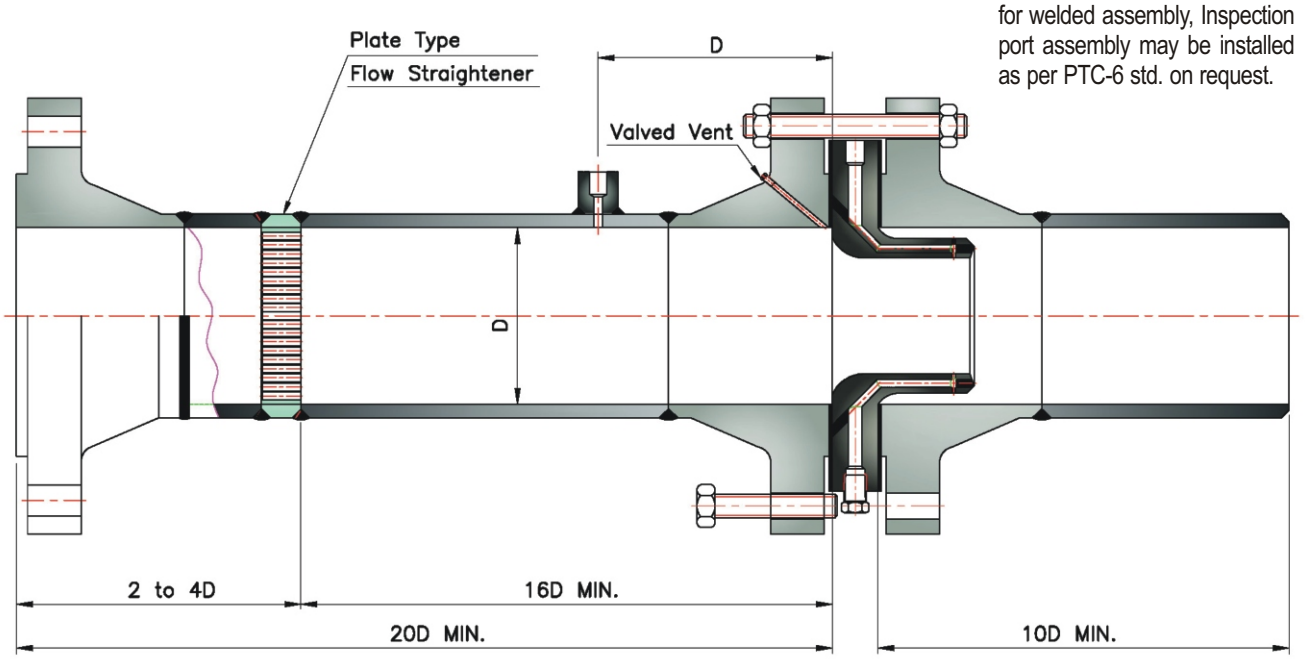

PRESSURE TAPPING

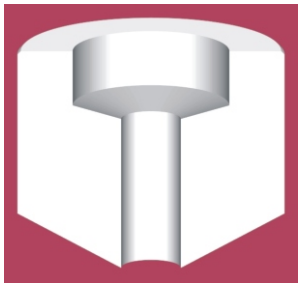

Full penetration groove weld
[Welding Adaptor]



Up to 800°F
[Welding Adaptor]

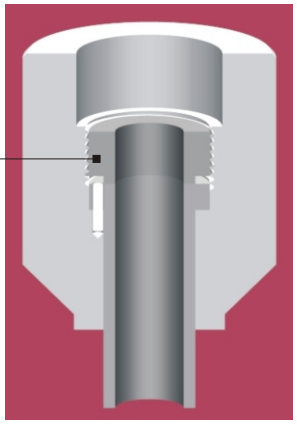

For temperature above 800°F
[Thermal Sleeve Welding Adaptor 2 1/4 Cr-Mo Steel]

Nominal Inside Pipe Diameter[D]	Recommended Max. Diameters of Pressure Tap Holes
Under 2"	1/4" [6.35 mm]
2" & 3"	3/8" [9.5 mm]
4" to 8"	1/2" [12.7 mm]
10" and Over	3/4" [19.05 mm]


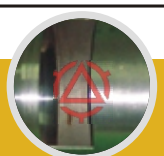

ASME PTC-6 THROAT TAP NOZLE

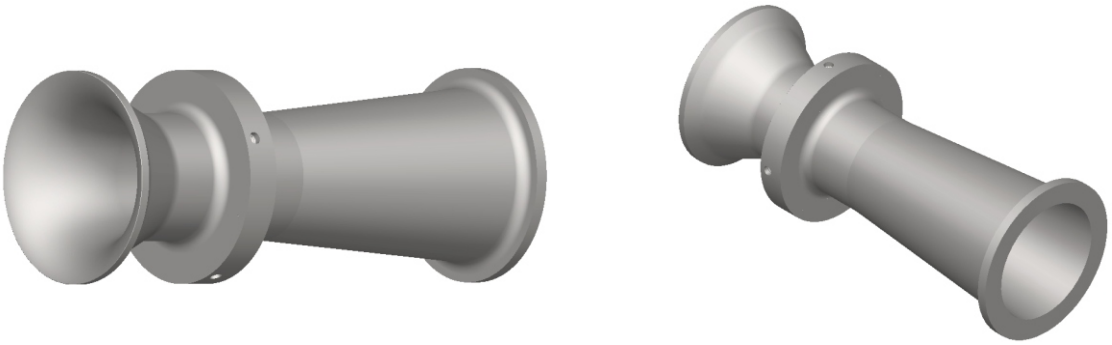

VENTURI-NOZZLE

The profile of the venturi-nozzle is axisymmetric. It consists of a convergent section, with a rounded profile, a cylindrical throat and a divergent section. The upstream face is identical with that of an ISA 1932 Nozzle.

The upstream pressure tappings shall be corner tappings [see below drawing]. The tappings may be located either in the pipe of its flanges or in carrier rings.

The throat pressure tappings shall be comprise at least four[4] single pressure tappings and **SAM IL** will offer the piezometer ring on request only.

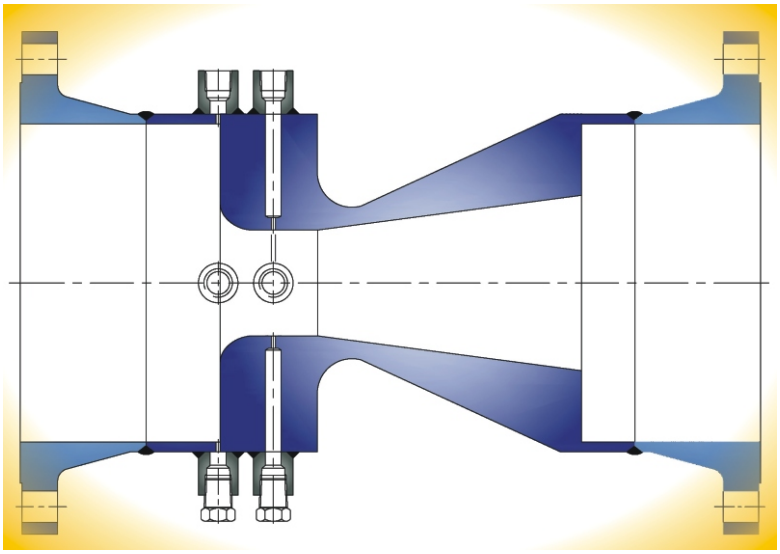

Profile of Venturi - Nozzle

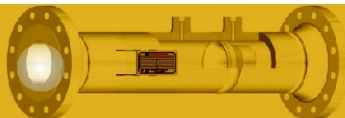

SAM IL INDUSTRY CO.,LTD.

SINCE 1979
SAM IL INDUSTRY CO.,LTD.

FLOW NOZZLES

NO.	BY	DATE	REVISION
1			
2			
3			
4			

SHEET	OF
CONTRACT	DATE
REQ. P.O	
BY / CHK'D / APPR.	

FLOW NOZZLES

1. TYPE : LONG RADIUS ■ OTHER :
2. STANDARD : ISO-5167 ☐ OTHER :
3. BORE : MAX. RATE ■ NEAREST 1/8" ☐
4. MATERIAL : 304SS ☐ 316SS ■ OTHER :
5. RING MATERIAL & TYPE :
6. MODEL NO. & MFR. : SEE BELOW NO. 40 & 41

FLANGES OR SPOOL[PIPE]

7. TAPS : RADIUS ■ THROAT ☐ OTHER :
8. TAP SIZE : 1/2" SW ■ OTHER :
9. TYPE : WELD NECK ☐ SLIP ON ☐ THERADED ☐
10. MATERIAL : STEEL ■ OTHER :
11. FLANGE INCLUDED ☐ OTHER : BY OTHER
12. FLANGE RATING : ANSI 300# RF OTHER :

FLUID DATA	★	13	Tag No.				
		14	Service				
		15	Line No.				
	★	16	Fluid Name				
	★	17	Fluid State				
	★	18	Maximum Flow [m^3/hr]				
	★	19	Normar Flow [m^3/hr				
	★	20	Press. @ Max. / Nor. [Kg/cm^2 g]				
	★	21	Temp. @ Max. / Nor. [°C]				
	★	22	Sp. Gr. / Density at Base				
	★	23	Sp. Gr. / Density at Oper.				
	★	24	Super Comp. Factor [Z]				
	★	25	Mol. W.T. Cp / Cv				
	★	26	Operating Viscosity [cp]				
		27	Base Press. Base Temp.				
METER	★	28	Type of Meter				
	★	29	Diff. Range [mmH2O]				
		30	Static Press. Range				
	★	31	Full Scale Range [m^3/hr]				
		32	Chart Multiplier				
NOZZLE & FLANGE OR PIPE	★	33	Flange Rating				
	★	34	Line Size Sch.				
	★	35	Line Material				
	★	36	Pair[s] of Tapping				
	★	37	Flange Type				
ACCESSORY		38	Nipple				
		39	Block Valve				
MANU'ER DATA		40	Model				
		41	Manufacture	SAM IL	SAM IL	SAM IL	SAM IL
	★	42	Q'ty				

REMARK : "★" MARKED COLUMNS SHALL BE FILLED UP BY CUSTOMER, IF POSSIBLE.
NOTE :

http : // www.samilind.co.kr