BRUSHLESS DC MOTOR UNIT - B Series

40W □80mm AC voltage input

DIMENSIONS

K8BS40N■

(Weight : 0.8Kg)



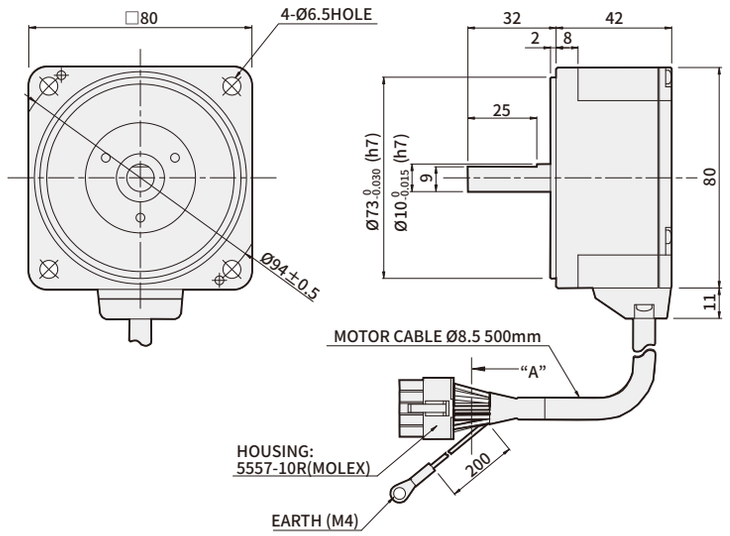

K8BH40N■ + K8H□B

(Weight : 1.7Kg)



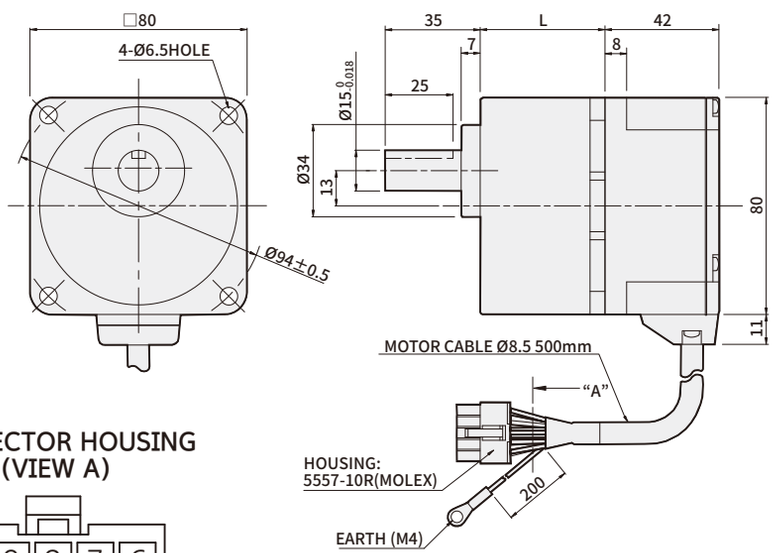

＊KEY · KEY GROOVE (ACCESSORY)

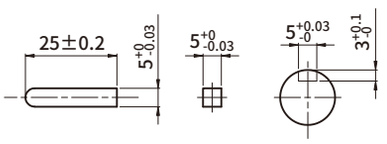

＊CONNECTOR HOUSING (VIEW A)

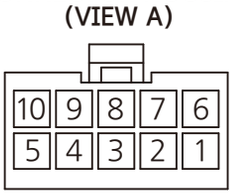

MOTOR PRODUCT NAME	GEARHEAD PRODUCT NAME	DECELERATION RATIO	L	FIXING BOLT
K8BH40N■	K8H□B	5,10,15,20	41	M6 P1.0×65
		30,50,100	46	M6 P1.0×70
		200	51	M6 P1.0×75

＊ In dimension, in ■ of name represents power voltage U(single-phase 100~115V), C(single-phase 200~230V)

＊ In □ of name, it represents a deceleration ratio.

＊ Geared motor is included with fixing bolt set. (flat washer, spring washer, hexagonal nut 4pcs each)

＊ PIN MAP

PIN No.	COLOR	SIGNAL
1	BLUE	U
2	-	-
3	GREEN	Ground
4	YELLOW	Vcc
5	ORANGE	Hw
6	PURPLE	V
7	GRAY	W
8		(Drain)
9	BROWN	Hu
10	WHITE	Hv

B-Series Specification

Product name	GEAR TYPE	K6BH20NU	K6BH20NC	K8BH40NU	K8BH40NC	K9BH90NU	K9BH90NC
	D-CUT TYPE	K6BS20NU	K6BS20NC	K8BS40NU	K8BS40NC	K9BS90NU	K9BS90NC
Rating output (continuous) W		20		40		90	
Power input	Voltage(single-phase) V	100~115	200~230	100~115	200~230	100~115	200~230
	Frequency Hz	50/60					
	Rating input current A	0.95	0.55	1.45	0.85	2.55	1.45
	Maximum input current A	1.55	0.9	2.5	1.4	3.9	2.4
Rating torque N·m		0.1		0.2		0.45	
Starting torque N·m		0.12		0.24		0.54	
Rating rotation speed r/min		2,000					
Speed control range r/min		100~2,000					

F-Series Specification

Product name	GEAR TYPE	K6FH30NC	K8FH60NC	K9FH150NC	K10FH200NC	K10FH400NC
	D-CUT TYPE	K6FS30NC	K8FS60NC	K9FS150NC	K10FS200NC	K10FS400NC
Rating output (continuous) W		30	60	150	200	400
Power input	Voltage(single-phase) V	single-phase 200~240V / three-phase 200~240V (Allowable range ±10%)				
	Frequency Hz	50/60				
	Rating input current A	single-phase : 0.8	single-phase : 1.0	single-phase : 2.0	single-phase : 2.5	single-phase : 4.0
		three-phase : 0.5	three-phase : 0.7	three-phase : 1.2	three-phase : 1.8	three-phase : 3.0
	Maximum input current A	single-phase : 1.9	single-phase : 2.8	single-phase : 4.5	single-phase : 5.5	single-phase : 7.8
		three-phase : 1.1	three-phase : 1.7	three-phase : 2.6	three-phase : 3.2	three-phase : 5.0
Rated output current A		0.17	0.43	0.95	1.60	2.30
Rating torque N·m		0.1	0.2	0.49	0.65	1.30
Starting torque N·m		0.15	0.3	0.60	1.15	1.80
Rating rotation speed r/min		3000				
Speed control range r/min		100~4000				

Common Specification

Items		Motor	Control unit
Insulation Resistance		After continuously operating at room temperature and humidity, it should begreater than 100㏁ between coil and case when measured with DC 500V MEGA TESTER	Protection ground terminal and power input should be greater than 100㏁ when measure with DC 500V MEGA TESTER
Dielectric Strength		After continuously operating at room temperature and humidity, there shouldn't be any problem if 60㎐, 1500V is applied for more than 1 minute between coil and case	There shouldn't be nay problem if 60㎐, 1500V is applied for more than 1 minute between protection ground terminal and power input
Temperature rise		After operating continuously at room temperature and humidity, the temperature increase should be less than 60℃ and less than 50℃ of temperature increase on the case surface when measure with thermo couple	
Used environment	Used Ambient temperature / Humidity	0℃~+50℃ (There should not be any freeze) / less than 85% (no dew condensation)	
	Ambient environment	No corrosive gas or dusts	
Conservation environment	Ambient temperature / Humidity	-25 ~ +70℃ (There should not be any freeze) / less than 85% (no dew)	
Insulation class		UL, CSA Standard A Type(105℃), EN Standard E Type(120℃)	
Protection class		IP65(Except for the mounting part on the output part)	IP10
Motor insulation class		E TYPE(120℃)	

Delivery effciency of gearhead

Product name	Deceleration ratio	5	10	15	20	30	50	100	200
	K6H□B	90%				86%			81%
	K8H□B	90%				86%			81%
	K9H□B	90%				86%			81%
	K10H□BU	90%				86%		81%	
	K6H□BTH	80%	85%						
	K8H□BTH	85%							
	K9H□BTH	85%							
	K10H□BTH	85%							

Allowed torque of combination type

Unit = N·m

Product name	Deceleration ratio	5	10	15	20	30	50	100	200
	Speed control range [r/min]	20~400	10~200	6.7~133	5~100	3.3~67	2~40	1~20	0.5~10
K6BH20N■ + K6H□B	100~2000	0.45	0.9	1.4	1.8	2.6	4.3	6	6
K8BH40N■ + K8H□B		0.9	1.8	2.7	3.6	5.2	8.6	16	16
K9BH90N■ + K9H□B		2	4.1	6.1	8.1	11.6	19.4	30	30
K6BH20N■ + K6H□BTH		0.4	0.85	1.3	1.7	2.6	4.3	8.5	17
K8BH40N■ + K8H□BTH		0.85	1.7	2.6	3.4	5.1	8.5	17	34
K9BH90N■ + K9H□BTH		1.9	3.8	5.7	7.7	11.5	19.1	38.3	68
Product name	Deceleration ratio	5	10	15	20	30	50	100	200
	Speed control range [r/min]	20~800	10~400	6.7~266	5~200	3.3~133	2~80	1~40	0.5~20
K6FH30NC+K6H□B	100~3000	0.45	0.9	1.4	1.8	2.6	4.3	6	6
	4000	0.36	0.72	1.08	1.4	2.1	3.4	5.4	5.4
K8FH60NC+K8H□B	100~3000	0.9	1.8	2.7	3.6	5.2	8.6	16	16
	4000	0.68	1.4	2.0	2.7	3.9	6.5	12.9	14
K9FH150NC+K9H□B	100~3000	2.2	4.4	6.6	8.8	12.6	21.1	30	30
	4000	1.4	2.7	4.1	5.4	7.7	12.9	25.8	27
K10FH200NC+K10H□BU	100~3000	2.9	5.9	8.8	11.7	16.8	28	52.7	70
	4000	2	4.1	6.1	8.1	11.6	19.4	36.5	63
K10FH400NC+K10H□BU	100~3000	5.9	11.7	17.6	23.4	33.5	55.9	70	70
	4000	4.3	8.6	12.8	17.1	24.5	40.9	63	63
K6FH30NC+K6H□BTH	100~3000	0.4	0.85	1.3	1.7	2.6	4.3	8.5	17
	4000	0.30	0.64	0.96	1.3	1.9	3.2	6.4	12.8
K8FH60NC+K8H□BTH	100~3000	0.85	1.7	2.6	3.4	5.1	8.5	17	34
	4000	0.64	1.3	1.9	2.6	3.8	6.4	12.8	25.5
K9FH150NC+K9H□BTH	100~3000	2.1	4.2	6.2	8.3	12.5	21	42	68
	4000	1.3	2.6	3.8	5.1	7.7	12.8	25.5	51
K10FH200NC+K10H□BTH	100~3000	2.8	5.5	8.3	11.1	16.6	27.6	55.3	—
	4000	1.9	3.8	5.7	7.7	11.5	19.1	38.3	—
K10FH400NC+K10H□BTH	100~3000	5.5	11.1	16.6	22.1	33.2	55.3	110	—
	4000	4.0	8.1	12.1	16.2	24.2	40.4	80.8	—

* In dimension, in ■ of name represents power voltage U(single-phase 100~115V), and C(single-phase 200~230V)
* Rotation direction shows the same □ color as the motor. In other cases, it's the opposite.
* Flat Gearbox viewed from front side is opposite rotation direction with motor.
* Flat Gearbox viewed from back side is same rotation direction with motor.

→ Allowed overhang load and allowed thrust

Product name		Deceleration ratio	Allowed overhand load				Allowed thrust load	
			From the end of output part 10mm		From the end of output part 20mm			
			N	kgf	N	kgf	N	kgf
GEARED MOTOR	K6BH20N■ (K6FH30NC) + K6H□B	5	100	10	150	15	40	4
		10,15,20	150	15	200	20		
		30,50,100,200	200	20	300	30		
	K8BH40N■ (K8FH60NC) + K8H□B	5	200	20	250	25	100	10
		10,15,20	300	30	350	35		
		30,50,100,200	450	45	550	55		
	K9BH90N■ (K9FH150NC) + K9H□B	5	300	30	400	40	150	15
		10,15,20	400	40	500	50		
		30,50,100,200	500	50	650	65		
	K10FH200NC (K10FH400NC) + K10H□BU	5,10,15,20	550	55	800	80	200	20
		30,50	1000	100	1250	125	300	30
		100,200	1400	140	1700	170	400	40
	K6BH20N■ (K6FH30NC) + K6H□BTH	5,10	450	45	370	37	200	20
		15~200	500	50	400	40		
	K8BH40N■ (K8FH60NC) + K8H□BTH	5,10	800	80	660	66	400	40
		15~200	1200	120	1000	100		
	K9BH90N■ (K9FH150NC) + K9H□BTH	5,10	900	90	770	77	500	50
		15,20	1300	130	1110	111		
		30,50,100,200	1500	150	1280	128		
	K10FH200NC (K10FH400NC) + K10H□BTH	5,10	1230	123	1070	107	800	80
		15,20	1680	168	1470	147		
		30,50,100	2040	204	1780	178		
MOTOR	K6BS20N■,K6FS30NC		70	7	100	10	· Do not apply THRUST load Please. If you can't help it, 50% or less.	
	K8BS40N■,K8FS60NC		120	12	140	14		
	K9BS90N■,K9FS150NC		160	16	170	17		
	K10FS200NC,K10FS400NC		197	19.7	220	22		

* In dimension, in ■ of name represents power voltage U(single-phase 100~115V),and C(single-phase 200~230V).
* In □ of name, it represents a deceleration ratio.
* Permissible overhang load can be withdrawn by calculation.

Rotation speed - torque characteristic

K6BS20N■ / K6BH20N■

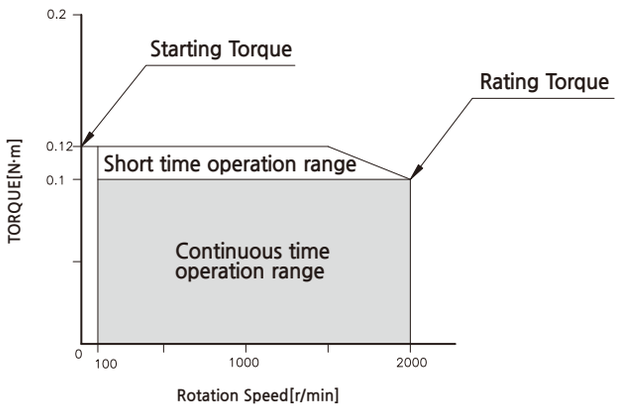

K6FS30NC / K6FH30NC

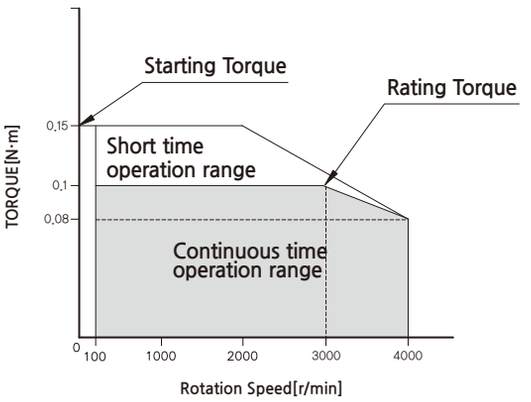

K8BS40N■ / K8BH40N■

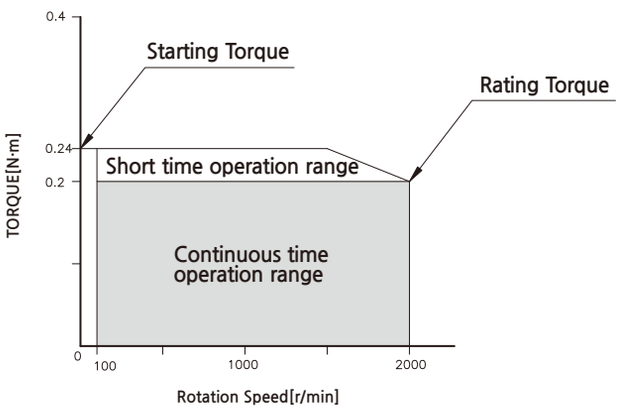

K8FS60NC / K8FH60NC

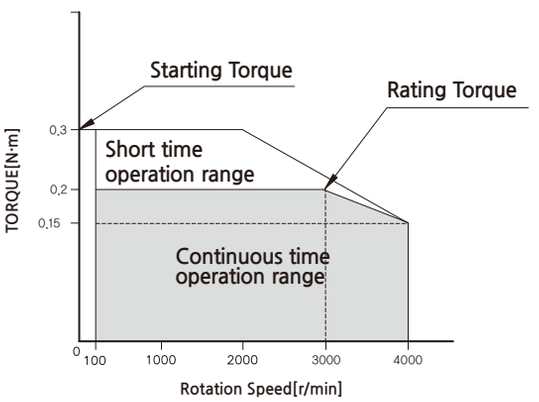

K9FS150NC / K9FH150NC

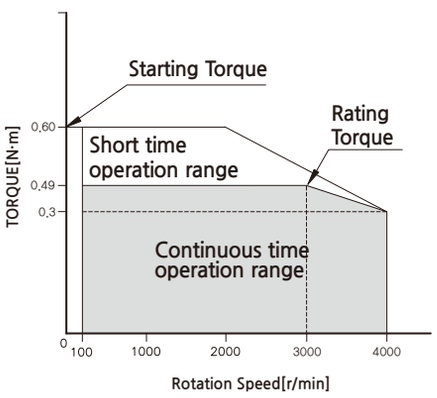

K10FS200NC / K10FH200NC

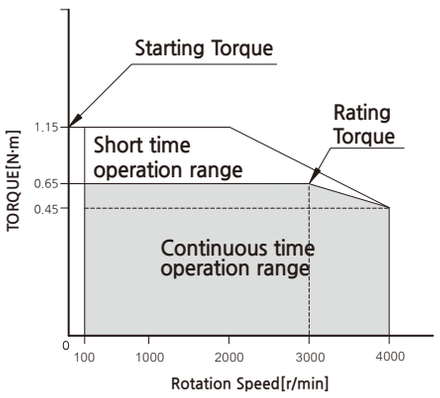

K10FS400NC / K10FH400NC

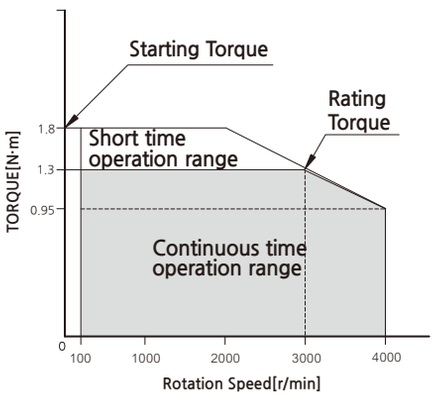

* In Dimension, in ■ of name represents power voltage U(single-phase 100~115V), C(single-phase 200~230V)