ACCEL DIAL SWITCH

MODEL DSC ACCEL DIAL SWITCH

Dong-Suh Control Co.,Ltd.





DESCRIPTION

The DSC Accel Dial Switch is used for a purpose of hand control accelerator in off-road vehicles and construction machine, agricultural vehicles and industrial vehicles. The DSC Accel Dial Switch uses Hall-Effect technology to meet to the requirements of a reliable and repeatable rotating function.

APPLICATION

The DSC Accel Dial Switch is designed to function in the several environmental requirements of heavy duty applications like off-highway of Industrial Vehicle, Agricultural Equipment etc.

FEATURES

- Variable connectors and cables are available
- Analogue and PWM output available
- Compact size
- Available in clockwise or counter-clockwise knob rotation with 10 steps
- Mechanical rotation angle : 100°±2°

SPECIFIACTION

- Rated voltage : DC5V
- Operating temperature : -40℃ ~ +85℃
- Storage temperature : -40℃ ~ +90℃
- Load current : 200mmA at 24Vdc, 120mA at 24Vdc
- Non metal case material : UL94-V0
- Moisture resistance to IP65 specifications

www.dscontrol.co.kr

Note: As all contents in this catalogue is the typical information, it is subject to change without notice for product improvement and it could be different depending on the products.

MODEL DSC TIME DELAY RELAYS

DIMENSIONS(TYPE A)

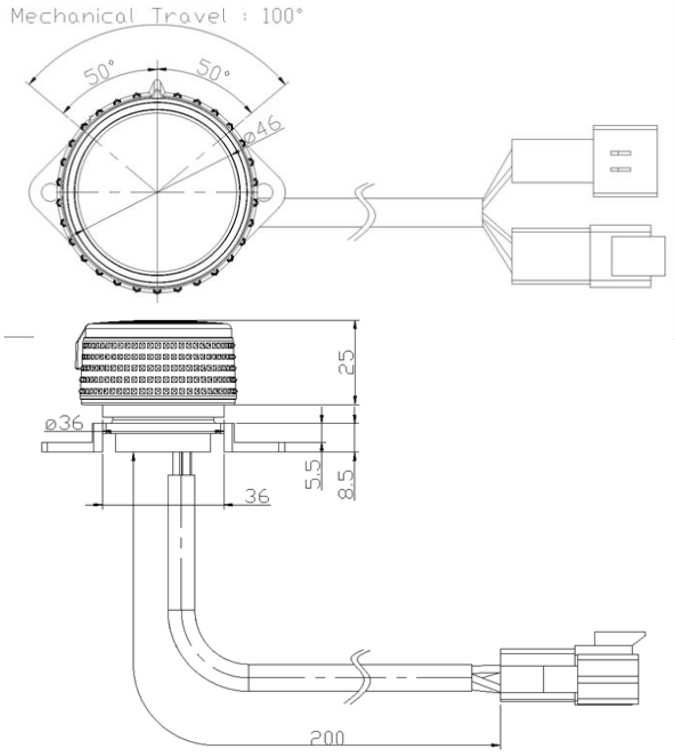

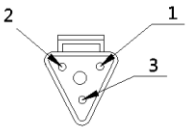

Deustch DT04-3P

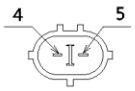

AMP 174354-2

Pin Location	Description	Wire Color
1	Vcc(5V)	AWG18 (Red)
2	Signal	AWG18 (Green)
3	GND(Signal)	AWG18 (Black)
4	LED(24V)	AWG20 (Blue)
5	GND(LED)	AWG20 (Brown)

DIMENSIONS(TYPE B)

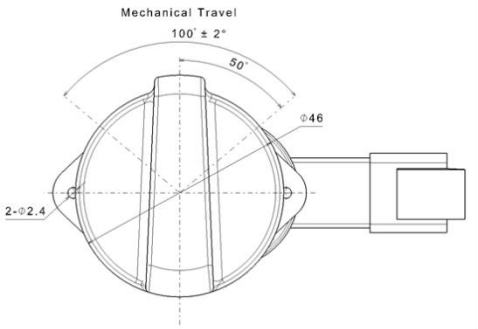

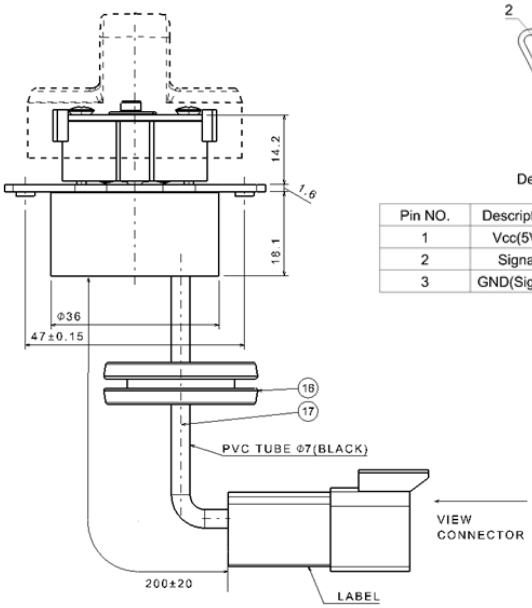

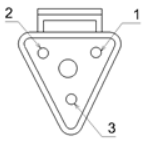

Deustch DT04-3P

Pin NO.	Description	Wire color
1	Vcc(5V)	AVS0.85, AWG18 (RED)
2	Signal	AVS0.85, AWG18 (GREEN)
3	GND(Signal)	AVS0.85, AWG18 (BLACK)