60HZ GSTV Draning pump

Specifications

MODEL	Output (KW)	Caliber (MM)	pump-up head (M)	capacity of pum (L/Min)	Weight (kg)
GSTV 0.75-2	0.75	50	12	0.16	35
GSTV 1.5-2	1.5	50	16.5	0.25	49
GSTV 2.2-2	2.2	80	20	0.3	54
GSTV 3.7-2	3.7	80	30	0.2	78
GSTV 1.5-3	1.5	80	8	0.5	49
GSTV 2.2-3	2.2	100	10	0.6	54
GSTV 3.7-3	3.7	100	20	0.5	78
GSTV 5.5-3	5.5	100	25	0.6	85

MODEL	Output (KW)	Caliber (MM)	pump-up head (M)	capacity of pum (L/Min)	Weight (kg)
GSTV 3.7-4	3.7	50	10	1.0	78
GSTV 5.5-4	5.5	50	15	1.0	85
GSTV 7.5-4	7.5	80	30	0.8	128
GSTV 11-4	11	80	35	1.0	171
GSTV 15-4	15	80	40	1.2	177
GSTV 7.5-6	7.5	100	15	1.6	132
GSTV 11-6	11	100	20	1.7	173
GSTV 15-6	15	100	20	2.5	182

Performance Curve

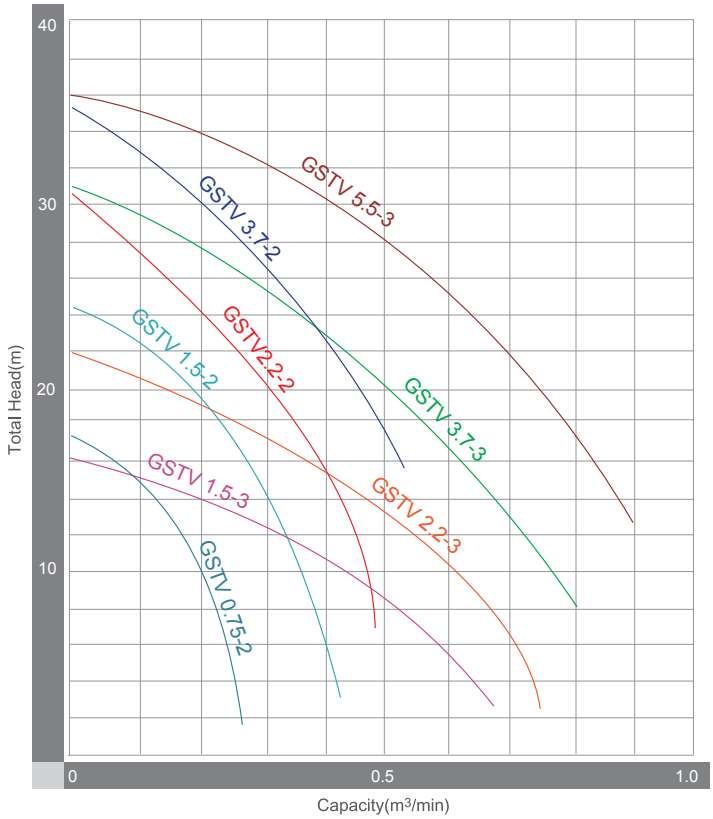

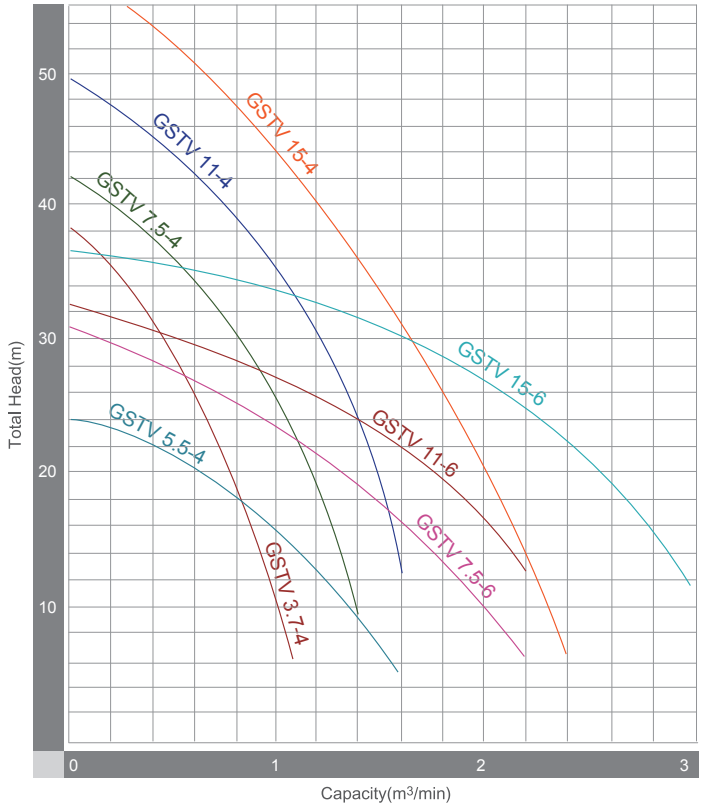

Dimension of pump

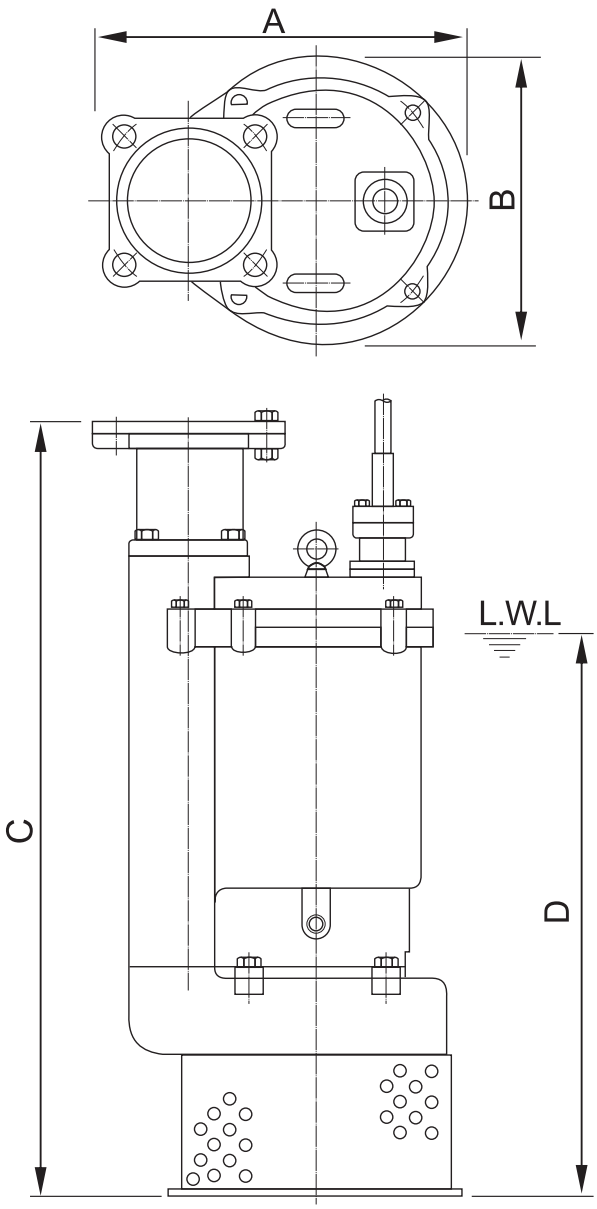

MODEL	A	B	C	D
GSTV 0.75-2	190	180	440	300
GSTV 1.5-2	250	200	500	350
GSTV 2.2-2	250	200	525	350
GSTV 3.7-2	295	245	645	410
GSTV 1.5-3	265	200	515	350
GSTV 2.2-3	265	200	540	350
GSTV 3.7-3	310	245	650	500
GSTV 5.5-3	310	255	675	500
GSTV 3.7-4	325	245	665	500
GSTV 5.5-4	325	255	690	500
GSTV 7.5-4	350	305	830	570
GSTV 11-4	370	320	875	600
GSTV 15-4	370	320	875	600
GSTV 7.5-6	385	305	880	570
GSTV 11-6	405	320	925	600
GSTV 15-6	405	320	925	600

*상기 치수는 제작에 따라 다소 차이가 날 수 있습니다.