WY22-AF Series (복권)

CE RoHS

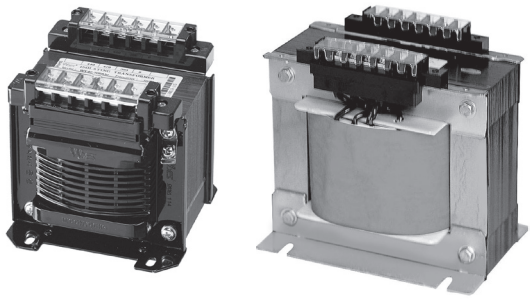

단상 복권형으로 입력 과 출력이 AC220V 1:1절연형으로 Line에서 Noise 감쇄 효과를 얻을 수 있어 Noise로 인한 각종기기의 오동작을 줄이는데 효과적이다.
AC 입력전압 인가시 전원표시 LED가 동작하여 안전성과 전모델 CE 획득으로 신뢰성을 확보하여 소비자의 사용에 충족하도록 설계된 제품 입니다.

Input voltage of single phase is AC 220V and output is AC 220. It is a product of 1:1 and manufactured with isolation to use stable output voltage as line noise is filtered. Also it is produced by terminal block with LED type and all models have been acquired of CE to meet customer and demand.

• Circuit Diagram

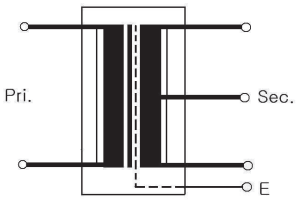

Specifications

MODEL NO.	TYPE	SPECIFICATIONS		VA	DIMENSIONS (mm)											WEIGHT (kg)
		PRI.(V)	SEC.(V)		W	H	D	a	b	c	d	e	(a,c)Ø1	Ø2	M	
• 220V Line → 220V Line Isolation Series																
WY22-50AF	WT	0-200-220	0-210-220-230-(E)	50	79	89	88	42	57	53.5	68	7	Ø3.6	5 X12	M3.5	1.65
WY22-80AF				80	89	98	105	46	65	62	83	7	ø3.6	5 X12	M3.5	2.30
WY22-100AF				100	89	98	105	46	65	62	83	7	Ø3.6	5 X12	M3.5	2.59
WY22-150AF				150	98	106	113	54	72	68	94	7	Ø3.6	6 X12	M3.5	3.20
WY22-200AF				200	112	114	110	58	76	65.5	88	10	Ø3.6	5 X10	M4	3.60
WY22-300AF				300	121	122	114	66	84	73	95	10	Ø3.6	5 X10	M4	4.97
WY22-500AF				500	140	140	126	82	98	79.5	105	10	Ø3.6	6 X12	M4	7.10
WY22-750AF				750	160	160	157	96	114	102.5	135	10	Ø3.6	6 X14	M4	10.70
WY22-1KAF				1K	160	188	151	110	134	95	123	16	Ø4.3	7 X14	M6	12.30
WY22-1.5AF				1.5K	185	188	151	110	134	95	123	16	Ø4.3	7 X14	M6	16.50
WY22-2KAF				2K	185	188	171	110	134	115	143	16	Ø4.3	7 X13	M6	20.10
WY22-3KAF				3K	219	220	170	-	120	-	135	16	-	10 X30	M6	26.70
WY22-5KAF				5K	245	240	192	-	180	-	165	16	-	10 X30	M6	40.20

※ Order Production : More then 5KVA
※ 3KVA 이상 " I "Bolt 부착 (Attach an " I " bolt for 3KVA or larger)
※ 정격용량 : 최대전압(TAP)에서의 용량임.
※ Rated capacity : Capacity at the maximum voltage(TAP).

Dimension

• WT Type

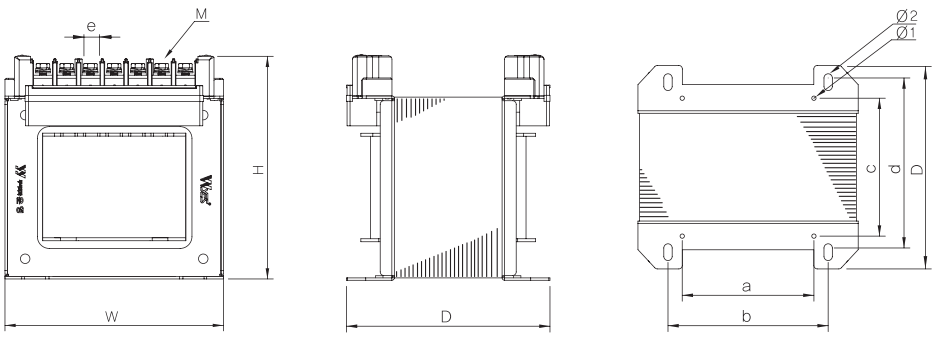

Terminal

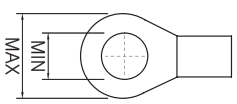

50~150VA : Max6, Min 3.5
200VA~1kVA : Max 9, Min 4
1.5~5kVA : Max 15, Min 6