We build a better future

Robex
220-9S
220LC-9S

With Tier 2 Engine installed



*Photo may include optional equipment.

PLEASE CONTACT

www.hyundai-ce.com 2016. 06. Rev.10

HYUNDAI HEAVY INDUSTRIES

CONSTRUCTION EQUIPMENT

Head Office (Sales Office)
18TH FI., DIGITAL CUBE BLDG. 34, SANGAMSAN-RO, MAPO-GU, SEOUL 121-904, KOREA
TEL: 82–2–6424–1118 **FAX:** 82-2-6424-1129

999009-600039

HYUNDAI HEAVY INDUSTRIES

Pride at Work

Hyundai Heavy Industries strives to build state-of-the art earthmoving equipment to give every operator maximum performance, more precision, versatile machine preferences, and proven quality. Take pride in your work with Hyundai!

Robex 220-9S
220LC-9S



*Photo may include optional equipment.

Machine Walk-Around

Engine Technology

Easy & Simple Serviceability / Auto engine warm up feature / Anti-restart feature

Hydraulic System Improvements

New patented hydraulic control for improved controllability / Improved control valve design for added efficiency and smoother operation / New auto boom and swing priority system for optimum speed / New auto power boost feature for additional power when needed / Improved arm-in and boom-down flow regeneration system for added speed and efficiency

Pump Compartment

Industry-leading, powerful, reliable Kawasaki designed, variable volume in-line axial piston pumps.
New compact solenoid block equipped with 3 solenoid valves, 1 EPPR valve, 1 check valve accumulator and pilot filter - controls 2 speed travel, power boost, boom priority, safety lock.

Enhanced Operator Cab

Improved Visibility
Enlarged cab with improved visibility / Larger right-side glass, now one piece, for better right visibility
Safety glass windows on all sides - less expensive than (polycarbonate) and won't scratch or fade
Closeable sunshade for operator convenience / Reduced front window seam for improved operator view

Improved Cab Construction
New steel tube construction for added operator safety, protection and durability
New window open/close mechanism designed with cable and spring lift assist and single latch release

Improved Suspension Seat / Console Assembly
Ergonomic joysticks with auxiliary control buttons for attachment use - now with new sleek styling
Adjustable arm rests - turn dial to raise or lower for optimum comfort

Advanced 7" Color Cluster
New Color LCD Display with easy to read digital gauges for hydraulic oil temperature, water temperature, and fuel / Simplified design makes adjustment and diagnostics easier. Also, new enhanced features such as rear-view camera are integrated into monitor.
3 power modes : (P) Power, (S) Standard, (E) Economy
2 work modes : Dig & Attachment, (U) User mode for operator preference
Enhanced self-diagnostic features with GPS / satellite technology
One pump flow or two pump flow for optional attachment is now selectable through the cluster.
/ New anti-theft system with password capability
Boom speed and arm regeneration are selectable through the monitor.
Auto power boost is now available - selectable (on/off) through the monitor.
Powerful air conditioning and heat with auto climate control, 20% more heat and air output than 7 series!

Hi-mate works through GPS/satellite technology to ultimately provide better customer service and support.

Undercarriage

Sealed track chain (urethane seals) / Standard track rail guard / Comfortable bolt-on steps
Large upper roller cut-outs for debris clean-out / Tapered side frames for debris clean-out / Grease-type track tensioner

Preference

Operating a 9S Series is unique to every operator. Operators can fully customize their work environment and operating preferences to fit their individual needs.

*Photo may include optional equipment.



Wide Cabin with Excellent Visibility

The newly designed cabin was conceived for more space, a wider field of view and operator comfort. Special attention was given to a clear, open and convenient interior with plenty of visibility on the machine surroundings and the job at hand. This well balanced combination of precision aspects put the operator in the perfect position to work safely and securely.

Operator Comfort

In 9S Series cabin you can easily adjust the seat, console and armrest settings to best suit your personal operating preferences. Seat and console position can be set together and independent from each other. Other preference settings that add to overall operator comfort include the fully automatic high capacity airconditioning system and the radio / USB player.





Reduced Stress

Work is stressful enough. Your work environment should be stress free. Hyundai's 9S Series provides improved cab amenities, additional space and a comfortable seat to minimize stress to the operator. A powerful climate control system provides the operator with optimum air temperature. An advanced audio system with USB player, AM/FM stereo is perfect for listening to music favorites.



Operator - Friendly Cluster

The advanced new cluster with 7 inch wide color LCD screen and toggle switch allows the operator to select his personal machine preferences. Power and work mode selection, self diagnostics, optional rear-view camera, maintenance check lists, start-up machine security, and were integrated into the cluster to make the machine more versatile and the operator more productive.



Precision

Innovative hydraulic system technologies make the 9S Series excavator fast, smooth and easy to control.



*Photo may include optional equipment.

Computer Aided Power

The engine horsepower and hydraulic horsepower together in unison through the advanced CAPO(Computer Aided Power Optimization) system, flow for the job at hand. Operator can set their own preferences for boom or swing priority, power mode selection and optional work tools at the touch of a button.
The CAPO system also provides complete self diagnostic features and digital gauges for important information like hydraulic oil temperature, water temperatures and fuel level. This system interfaces with multiple sensors placed throughout the hydraulic system as well as hydraulic flow.

Power Mode

P (Power Max) mode maximizes machine speed and power for mass production.
S (Standard) mode provides a reduced, fixed rpm for optimum performance and improved fuel economy. For maximum fuel savings and improved control, E (Economy) mode provides precise flow based on load demand. Three unique power modes provide the operator with custom power, speed and fuel economy.

Work Mode

The work mode allows the operator to select single flow attachments like a hydraulic breaker or bi-directional flow attachments like a crusher. Flow settings unique to each attachment can be programmed from within the cluster.

User Mode

Some jobs require more precise machine settings. Using the versatile U (User) mode, the operator can customize engine speed, pump output, idle speed and other machine settings for the job at hand.

Improved Hydraulic System



To achieve optimum precision, Hyundai redesigned the hydraulic system to provide the operator with super fine touch and improved controllability. Improved pump flow control reduces flow when controls are not being used to minimize fuel consumption.
Improved spool valves in the control valve are engineered to provide more precise flow to each function with less effort.
Improved hydraulic valves, precision-designed variable volume piston pumps, fine-touch pilot controls, and enhanced travel functions make any operator running a 9S Series look like a smooth operator. Newly improved features include arm-in and boom-down flow regeneration, improved control valve technology and innovative auto boom and swing priority for optimal performance in any application.

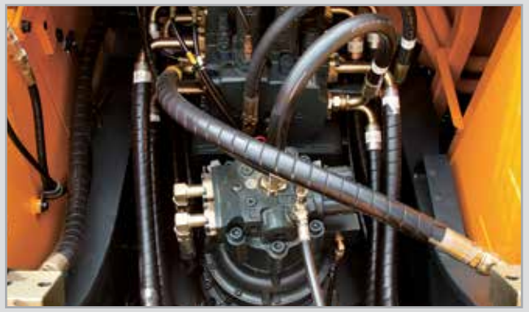

Auto Boom-swing Priority

This smart function automatically and continuously looks the ideal hydraulic flow balance for the boom and swing motions of the machine. The advanced CAPO system monitors the hydraulic system and adjusts its settings to maximize performance and productivity.

Performance

9S Series is designed for maximum performance to keep the operator working productively.

*Photo may include optional equipment.

Structure Strength

The 9S Series cabin structure has been fitted with stronger but slimmer tubing for more safety and improved visibility. Low-stress, high strength steel is integrally welded to form a stronger, more durable upper and lower frame. Structural integrity was tested by way of FEM (Finite Elements Method) analysis and long-term durability tests.

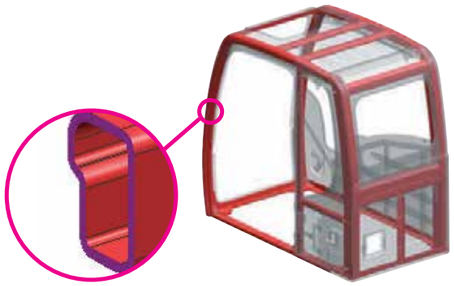





Improved Durability

9S series excavators are equipped with Hi-Grade hoses to make sure of ity without oil-leakage and stainless spring guards to protect hoses from external damages.

Track Rail Guard & Adjusters

Durable track rail guards keep track links in place. Track adjustment is made easy with standard grease cylinder track adjusters and shock absorbing springs.



HYUNDAI HM5.9

The six cylinders, turbo-charged, 4 cycle, charger air cooled engine is built for power, reliability, economy and low emissions.

A More Reliable Way To Reach Your Dream.

The HYUNDAI HM5.9 engine has been designed with 40% fewer parts than the competition. That means there's less that can go wrong when you need it most. It also means fewer parts to inventory. Repairs are simplified because no special tools are needed for maintenance. The weight of the machine is reduced without sacrificing strength.

The HYUNDAI HM5.9 engine is capable of reaching emission standards without electronic engine controls. You get a proven power plant that meets ecological concerns, without paying a premium for technology you don’t need.



Profitability

9S Series is designed to maximize profitability through improved efficiencies, enhanced service features and longer life components.



*Photo may include optional equipment.



Hi-mate (Remote Management System)

Hi-mate, Hyundai's proprietary remote management system, provides operators and dealer service personnel access to vital service and diagnostic information on the machine from any computer with internet access. Users can pinpoint machine location using digital mapping and set machine work boundaries, reducing the need for multiple service calls. Hi-mate saves time and money for the owner and dealer by promoting preventative maintenance and reducing machine downtime.

Fuel Efficiency

9S Series excavators are engineered to be extremely fuel efficient. New innovations like two-stage auto decel system and the new economy mode help to conserve fuel and reduce the impact on the environment.





Easy Access

Ground-line access to filters, lube fittings, fuses, machine computer components and wide open compartments makes service more convenient on the 9S Series.



Long-Life Components

9S series excavators were designed with bushings designed for long-life lube intervals (250 hrs) & polymer shims (wear resistant, noise reducing), long-life hydraulic filters (1,000hrs), long-life hydraulic oil (5,000hrs), more efficient cooling systems and integrated preheating systems which extend service intervals, minimize operating costs and reduce machine down time.

Specifications

ENGINE / R220-9S / R220LC-9S

MODEL			HYUNDAI HM 5.9
Type			Water cooled, 4 cycle Diesel, 6-cylinders in line, direct injection, turbocharged, charger air cooled
Rated flywheel horse power	SAE	J1995 (gross)	150 HP at 1,950 rpm
		J1349 (net)	143 HP at 1,950 rpm
	DIN	6271/1 (gross)	152 PS at 1,950 rpm
		6271/1 (net)	145 PS at 1,950 rpm
Max. torque			62.6kgf·m/1,500rpm
Bore X stroke			102mm X 120mm
Piston displacement			5,900cc
Batteries			2 X 12V X 100AH
Starting motor			24V, 4.5kW
Alternator			24V, 90Amp

HYDRAULIC SYSTEM

MAIN PUMP	
Type	Variable displacement tandem axis piston pumps
Rated flow	2 X 222.3 L /min
Sub-pump for pilot circuit	Gear pump

Cross-sensing and fuel saving pump system.

HYDRAULIC MOTORS	
Travel	Two speed axial pistons motor with brake valve and parking brake
Swing	Axial piston motor with automatic brake

RELIEF VALVE SETTING	
Implement circuits	350 kgf/cm^2
Travel	350 kgf/cm^2
Power boost (boom, arm, bucket)	380 kgf/cm^2
Swing circuit	265 kgf/cm^2
Pilot circuit	40 kgf/cm^2
Service valve	Installed

HYDRAULIC CYLINDERS	
No. of cylinder bore X stroke	Boom: 2-120 X 1,290 mm
	Arm: 1-140 X 1,510 mm
	Bucket: 1-120 X 1,055 mm

DRIVES & BRAKES

Drive method	Fully hydrostatic type
Drive motor	Axial piston motor, in-shoe design
Reduction system	Planetary reduction gear
Max. drawbar pull	21,100 kgf
Max. travel speed(high) / (low)	5.5 km/hr / 3.8 km/hr
Gradeability	35^0 (70 %)
Parking brake	Multi wet disc

CONTROL

Pilot pressure operated joysticks and pedals with detachable lever provide almost effortless and fatigueless operation.

Pilot control	Two joysticks with one safety lever (LH): Swing and arm, (RH): Boom and bucket(ISO)
Traveling and steering	Two levers with pedals
Engine throttle	Electric, Dial type

SWING SYSTEM

Swing motor	Fixed displacement axial piston motor
Swing reduction	Planetary gear reduction
Swing bearing lubrication	Grease-bathed
Swing brake	Multi wet disc
Swing speed	12.1 rpm

COOLANT & LUBRICANT CAPACITY

Refilling	liter
Fuel tank	400.0
Engine coolant	35
Engine oil	24.0
Swing device-gear oil(OTP)	5.0(6.2)
Final drive(each)-gear oil(OTP)	5.8(4.5)
Hydraulic system(including tank)	275.0
Hydraulic tank	160.0

UNDERCARRIAGE

The X-leg type center frame is integrally welded with reinforced box-section track frames. The undercarriage includes lubricated rollers, idlers, track adjusters with shock absorbing springs and sprockets, and a track chain with double or triple grouser shoes.

Model	R220LC-9S	R220-9S
Center frame	X - leg type	X - leg type
Track frame	Pentagonal box type	Pentagonal box type
No. of shoes on each side	49 EA	46 EA
No. of carrier roller on each side	2 EA	2 EA
No. of track roller on each side	9 EA	7 EA
No. of rail guard on each side	2 EA	1 EA

OPERATING WEIGHT (APPROXIMATE)

Operating weight, including 5,680mm boom, 2,920mm arm, SAE heaped 0.92m^3 bucket, lubricant, coolant, full fuel tank, full hydraulic tank, and all standard equipments.

MAJOR COMPONENT WEIGHT	
Upperstructure	5,600kg
Boom (with arm cylinder)	1,950kg
Arm (with bucket cylinder)	1,095kg

OPERATING WEIGHT

Shoes		Operating weight		Ground pressure
Type	Width mm	kg		kgf/cm^2
Triple grouser	600	R220LC-9S	21,900	0.46
		R220LC-9S / H / W	23,360	0.50
		R220-9S	21,200	0.49
	700	R220LC-9S	22,250	0.40
		R220LC-9S / H / W	23,710	0.43
		R220-9S	21,470	0.42
	800	R220LC-9S	22,515	0.36
		R220LC-9S H/W	23,975	0.38
		R220-9S	21,740	0.37
	900	R220LC-9S	22,760	0.32
		R220LC-9S / H / W	24,255	0.34
		R220-9S	22,000	0.34
Double grouser	700	R220LC-9S H/W	24,220	0.43

BUCKETS

All buckets are welded with high-strength steel.

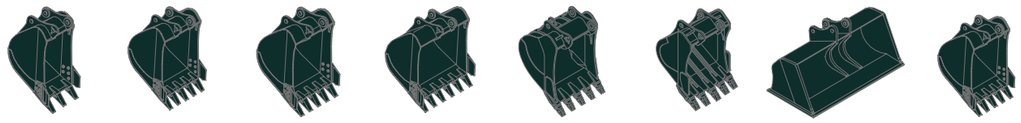

SAE heaped m³	0.51	0.80 0.92	1.10 1.20	1.34	◈0.74 ◈0.90 ◈1.05	◉0.87 ◉1.20	▣0.75	★0.52

Capacity m³		Width mm		Weight kg	Recommendation mm				
					5,680 Boom				8,200 Boom
SAE heaped	CECE heaped	Without sidecutters	With sidecutters		2,000 Arm	2,400 Arm	2,920 Arm	3,900 Arm	6,300 Arm
0.51	0.45	700	820	570	●	●	●	■	–
0.80	0.70	1,000	1,120	700	●	●	●	▲	–
0.92	0.80	1,150	1,270	770	●	●	●	▲	–
1.10	0.96	1,320	1,440	830	●	●	■	▲	–
1.20	1.00	1,400	1,520	850	●	■	▲	–	–
1.34	1.15	1,550	1,670	920	■	■	▲	–	–
◈ 0.74	0.65	985	-	770	●	●	●	▲	–
◈ 0.90	0.80	1,095	-	810	●	●	●	▲	–
◈ 1.05	0.92	1,290	-	890	●	●	■	▲	–
◉ 0.87	0.75	1,140	-	900	●	●	●	▲	–
◉ 1.20	1.00	1,410	-	1,030	■	▲	–	–	–
▣ 0.75	0.65	1,790	-	880	●	●	■	▲	–
★ 0.52	0.45	935	1,035	460	–	–	–	–	■

◈ Heavy duty bucket
◉ Rock-Heavy duty bucket
▣ Slope finishing bucket
★ Long reach bucket

● : Applicable for materials with density of 2,000 kg /m³ or less
■ : Applicable for materials with density of 1,600 kg /m³ or less
▲ : Applicable for materials with density of 1,100 kg /m³ or less

ATTACHMENT

Booms and arms are welded with a low-stress, full-box section design. 5.68m, 8.20m Booms and 2.0m, 2.4m, 2.92m, 3.90m, 6.3m Arms are available.

DIGGING FORCE

Boom	Length	mm	5,680				8,200	Remarks
	Weight	kg	1,950				2,350	
Arm	Length	mm	2,000	2,400	2,920	3,900	6,300	
	Weight	kg	975	1,045	1,095	1,295	1,330	
Bucket digging force	SAE	kN	133.4 [144.8]	133.4 [144.8]	133.4 [144.8]	133.4 [144.8]	72.6	[ ]: Power Boost
	ISO	kN	152.0 [165.0]	152.0 [165.0]	152.0 [165.0]	152.0 [165.0]	83.4	
Arm crowd force	SAE	kN	144.2 [156.5]	119.6 [129.9]	102.0 [110.7]	84.3 [91.6]	49.0	
	ISO	kN	151.0 [164.0]	125.5 [136.3]	106.9 [116.1]	87.3 [94.8]	50.0	

Note: Boom weight includes arm cylinder, piping, and pin
Arm weight includes bucket cylinder, linkage, and pin

Dimensions & Working Range

R220-9S DIMENSIONS

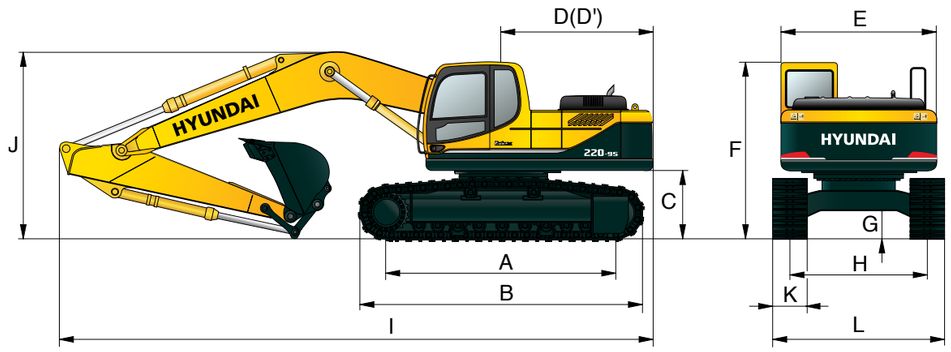

Unit : mm

A	Tumbler distance	3,360
B	Overall length of crawler	4,150
C	Ground clearance of counterweight	1,060
D	Tail swing radius	2,840
D'	Rear-end length	2,770
E	Overall width of upperstructure	2,740
F	Overall height of cab	2,920
G	Min. ground clearance	480
H	Track gauge	2,200

	Boom length	5,680			
	Arm length	2,000	2,400	2,920	3,900
I	Overall length	9,650	9,570	9,530	9,520
J	Overall height of boom	3,200	3,110	3,030	3,480
K	Track shoe width	600	700	800	900
L	Overall width	2,800	2,900	3,000	3,100

R220-9S WORKING RANGE

Unit : mm

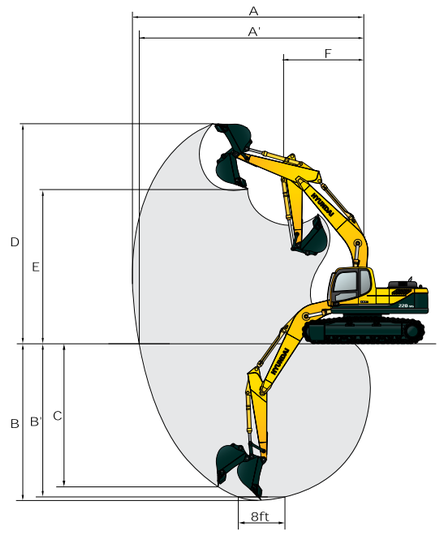

	Boom length	5,680			
	Arm length	2,000	2,400	2,920	3,900
A	Max. digging reach	9,140	9,500	9,980	10,910
A'	Max. digging reach on ground	8,960	9,330	9,820	10,770
B	Max. digging depth	5,820	6,220	6,730	7,720
B'	Max. digging depth (8' level)	5,580	6,010	6,560	7,580
C	Max. vertical wall digging depth	5,280	5,720	6,280	7,240
D	Max. digging height	9,140	9,340	9,600	10,110
E	Max. dumping height	6,330	6,520	6,780	7,290
F	Min. swing radius	3,750	3,740	3,740	3,650

Dimensions & Working Range

R220LC-9S DIMENSIONS

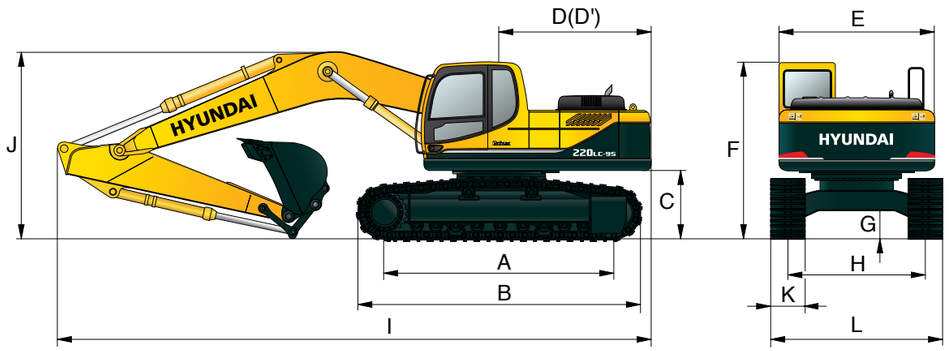

Unit : mm

A	Tumbler distance	3,650
B	Overall length of crawler	4,440
C	Ground clearance of counterweight	1,060
D	Tail swing radius	2,840
D'	Rear-end length	2,770
E	Overall width of upperstructure	2,740
F	Overall height of cab	2,920
G	Min. ground clearance	480
H	Track gauge	2,390

	Boom length	5,680			8,200
	Arm length	2,000	2,400	2,920	3,900	6,300
I	Overall length	9,650	9,570	9,530	9,520	12,030
J	Overall height of boom	3,200	3,110	3,030	3,480	3,280

K	Track shoe width	600	700	800	900
L	Overall width	2,990	3,090	3,190	3,290

R220LC-9S WORKING RANGE

Unit : mm

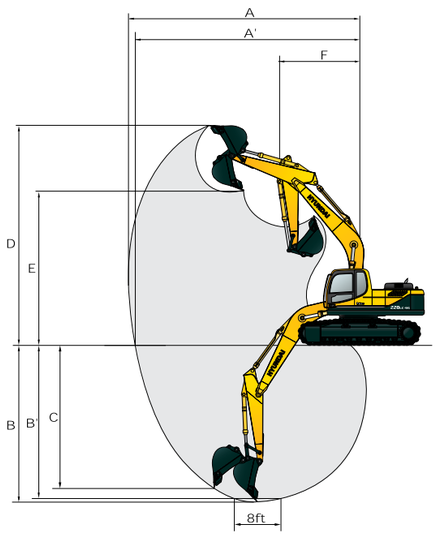

	Boom length	5,680				8,200
	Arm length	2,000	2,400	2,920	3,900	6,300
A	Max. digging reach	9,140	9,500	9,980	10,910	15,220
A'	Max. digging reach on ground	8,960	9,330	9,820	10,770	15,120
B	Max. digging depth	5,820	6,220	6,730	7,720	11,760
B'	Max. digging depth (8' level)	5,580	6,010	6,560	7,580	11,650
C	Max. vertical wall digging depth	5,280	5,720	6,280	7,240	9,610
D	Max. digging height	9,140	9,340	9,600	10,110	12,550
E	Max. dumping height	6,330	6,520	6,780	7,290	10,280
F	Min. swing radius	3,750	3,740	3,740	3,650	4,870

Dimensions & Working Range

R220LC-9S HIGH WALKER DIMENSIONS

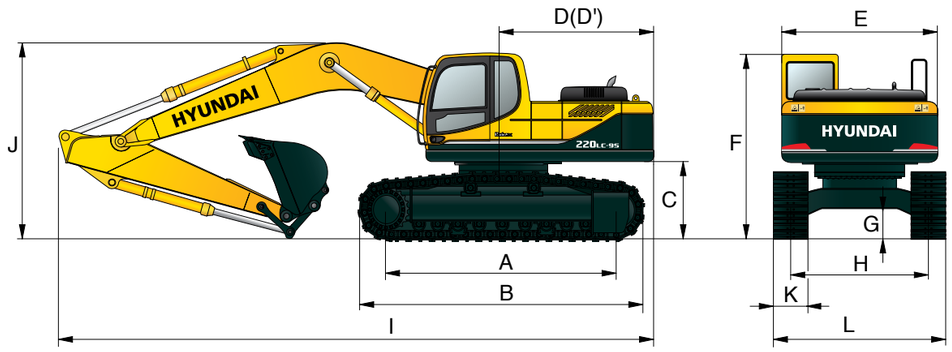

Unit : mm

A	Tumbler distance	3,650
B	Overall length of crawler	4,440
C	Ground clearance of counterweight	1,240
D	Tail swing radius	2,840
D'	Rear-end length	2,770
E	Overall width of upperstructure	2,740
F	Overall height of cab	3,100
G	Min. ground clearance	660
H	Track gauge	2,795

	Boom length	5,680			
	Arm length	2,000	2,400	2,920	3,900
I	Overall length	9,650	9,550	9,470	9,560
J	Overall height of boom	3,290	3,170	3,060	3,450

K	Track shoe width	Type	Triple grouser			Double grouser
		Width	600	700	800	700
L	Overall width		3,395	3,495	3,595	3,495

R220LC-9S HIGH WALKER WORKING RANGE

Unit : mm

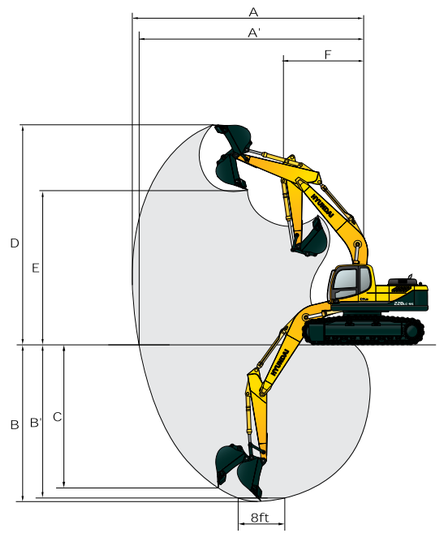

	Boom length	5,680			
	Arm length	2,000	2,400	2,920	3,900
A	Max. digging reach	9,140	9,500	9,980	10,910
A'	Max. digging reach on ground	8,920	9,290	9,820	10,730
B	Max. digging depth	5,630	6,010	6,550	7,530
B'	Max. digging depth (8' level)	5,390	5,820	6,380	7,390
C	Max. vertical wall digging depth	5,090	5,630	6,100	7,050
D	Max. digging height	9,330	9,530	9,780	10,300
E	Max. dumping height	6,520	6,710	6,960	7,480
F	Min. swing radius	3,750	3,740	3,740	3,650

Lifting Capacity

R220-9S

Rating over-front Rating over-side or 360 degree

Boom : 5.68m / Arm : 2.40 m / Bucket : 0.92 m³ SAE heaped / Shoe : 600mm triple grouser

Load point height (m)		Load radius										At max. reach		
		1.5 m		3.0 m		4.5 m		6.0 m		7.5 m		Capacity		Reach
														(m)
7.5 m	kg											*3700	3220	7.15
6.0 m	kg							*4010	*4010			*3780	2410	8.20
4.5 m	kg							*4490	4140	*4230	2730	3500	2020	8.82
3.0 m	kg					*6900	6100	*5280	3870	4500	2620	3240	1830	9.11
1.5 m	kg					*8560	5540	*6120	3590	4350	2490	3180	1780	9.10
Ground	kg			*8790	*8790	*9490	5250	6050	3400	4250	2390	3340	1870	8.81
-1.5 m	kg	*9760	*9760	*13510	*10230	9630	5170	5960	3330			3770	2140	8.18
-3.0 m	kg	*14150	*14150	*13240	*10440	*9090	5240	6010	3370			*4700	2770	7.12
-4.5 m	kg			*10630	*10630	*7400	5490							

Boom : 5.68m / Arm : 2.92 m / Bucket : 0.92 m³ SAE heaped / Shoe : 600mm triple grouser

Load point height (m)		Load radius										At max. reach		
		1.5 m		3.0 m		4.5 m		6.0 m		7.5 m		Capacity		Reach
														m(m)
7.5 m	kg											*3360	2780	7.78
6.0 m	kg									*2340	*2340	*3450	2140	8.74
4.5 m	kg							*4010	*4010	*4230	2780	3180	1810	9.32
3.0 m	kg			*9780	*9780	*6150	*6150	*4840	3920	4220	2650	2950	1650	9.59
1.5 m	kg			*8810	*8810	*7960	5640	*5750	3620		2490	2900	1600	9.59
Ground	kg			*9550	*9550	*9160	5260	6040	3390		2370	3020	1660	9.31
-1.5 m	kg	*8810	*8810	*12610	10050	9560	5110	5910	3270		2310	3360	1870	8.72
-3.0 m	kg	*12190	*12190	*13980	10210	*9320	5130	5900	3270			4120	2340	7.75
-4.5 m	kg			*11860	10550	*8120	5300					*4330	3570	6.16

Boom : 5.68m / Arm : 3.90 m / Bucket : 0.92 m³ SAE heaped / Shoe : 600mm triple grouser

Load point height (m)		Load radius												At max. reach		
		1.5 m		3.0 m		4.5 m		6.0 m		7.5 m		9.0 m		Capacity		Reach
																(m)
9.0 m	kg													*2740	*2740	7.66
7.5 m	kg									*1980	*1980			*2800	2110	8.94
6.0 m	kg									*2840	*2840			*2900	1680	9.77
4.5 m	kg									*3090	2860	*2040	1910	2640	1440	10.28
3.0 m	kg							*3940	*3940	*3560	2690	*2910	1840	2460	1310	10.52
1.5 m	kg			*11130	*11130	*6640	5860	*4950	3690	*4120	2490	3170	1730	2410	1260	10.52
Ground	kg	*5260	*5260	*10600	10070	*8250	5290	*5860	3380	4180	2320	3070	1640	2480	1290	10.27
-1.5 m	kg	*7500	*7500	*11650	9720	*9150	4980	5810	3180	4050	2200	*2370	1590	2700	1430	9.75
-3.0 m	kg	*9990	*9990	*14350	9730	9330	4890	5720	3100	4010	2160			3170	1720	8.91
-4.5 m	kg	*12960	*12960	*13360	9960	*8830	4970	5780	3140					*4030	2350	7.62
-6.0 m	kg			*10610	10450	*7100	5240									

Lifting Capacity

R220LC-9S

Rating over-front Rating over-side or 360 degree

Boom : 5.68m / Arm : 2.0 m / Bucket : 0.92 m³ SAE heaped / Shoe : 600mm triple grouser

Load point height (m)		Load radius								At max. reach		
		3.0 m		4.5 m		6.0 m		7.5 m		Capacity		Reach
												(m)
7.5 m	kg									*4010	*4010	6.65
6.0 m	kg					*4440	*4440			*4060	3040	.78
4.5 m	kg			*5730	*5730	*4860	4630			*4190	2540	8.43
3.0 m	kg			*7460	6840	*5610	4370	*4830	3000	4040	2310	8.74
1.5 m	kg			*8990	6320	*6390	4120	5060	2890	3990	2260	8.73
Ground	kg			*9690	6090	*6910	3950	4980	2810	4200	2380	8.42
-1.5 m	kg	*13990	12260	*9630	6070	*6990	3910			4820	2750	7.76
-3.0 m	kg	*12500	12500	*8820	6180	*6350	3990			*4850	3650	6.61
-4.5 m	kg	*9460	*9460									

Boom : 5.68m / Arm : 2.40 m / Bucket : 0.92 m³ SAE heaped / Shoe : 600mm triple grouser

Load point height (m)		Load radius										At max. reach		
		1.5 m		3.0 m		4.5 m		6.0 m		7.5 m		Capacity		Reach
														(m)
7.5 m	kg											*3700	3640	7.15
6.0 m	kg							*4010	*4010			*3780	2760	8.20
4.5 m	kg							*4490	*4490	*4230	3130	*3900	2340	8.82
3.0 m	kg					*6900	*6900	*5280	4400	*4560	3010	3760	2130	9.11
1.5 m	kg					*8560	6380	*6120	4130	*4970	2880	3710	2080	9.10
Ground	kg			*8790	*8790	*9490	6080	*6740	3930	4950	2780	3890	2180	8.81
-1.5 m	kg	*9760	*9760	*13510	12060	*9650	6000	*6960	3850			4390	2480	8.18
-3.0 m	kg	*14150	14150	*13240	12280	*9090	6080	*6590	3900			*4700	3190	7.12
-4.5 m	kg			*10630	*10630	*7400	6330							

Boom : 5.68m / Arm : 2.92 m / Bucket : 0.92 m³ SAE heaped / Shoe : 600mm triple grouser

Load point height (m)		Load radius										At max. reach		
		1.5 m		3.0 m		4.5 m		6.0 m		7.5 m		Capacity		Reach
														m(m)
7.5 m	kg											*3360	3150	7.78
6.0 m	kg									*2340	*2340	*3450	2460	8.74
4.5 m	kg							*4010	*4010	*3830	3180	*3580	2100	9.32
3.0 m	kg			*9780	*9780	*6150	*6150	*4840	4460	*4230	3040	3440	1930	9.59
1.5 m	kg			*8810	*8810	*7960	6490	*5750	4160	*4710	2880	3390	1880	9.59
Ground	kg			*9550	*9550	*9160	6090	*6490	3920	4930	2750	3520	1950	9.31
-1.5 m	kg	*8810	*8810	*12610	11870	*9600	5940	*6870	3800	4860	2690	3920	2190	8.72
-3.0 m	kg	*12190	*12190	*13980	12040	*9320	5960	*6740	3800			*4460	2710	7.75
-4.5 m	kg			*11860	*11860	*8120	6140					*4330	4080	6.16

1. Lifting capacity is based on SAE J1097, ISO 10567.
2. Lifting capacity of the Robex Series does not exceed 75% of the tipping load with the machine on firm, level ground or 87% of full hydraulic capacity.
3. The load point is a hook located on the back of the bucket.
4. (*) indicates the load limited by hydraulic capacity.

Lifting Capacity

R220LC-9S

Rating over-front / Rating over-side or 360 degree

Boom : 5.68m / Arm : 3.90 m / Bucket : 0.92 m³ SAE heaped / Shoe : 600mm triple grouser

Load point height (m)		Load radius												At max. reach		
		1.5 m		3.0 m		4.5 m		6.0 m		7.5 m		9.0 m		Capacity		Reach
																(m)
9.0 m	kg													*2740	*2740	7.66
7.5 m	kg									*1980	*1980			*2800	2420	8.94
6.0 m	kg									*2840	*2840			*2900	1960	9.77
4.5 m	kg									*3090	*3090	*2040	*2040	*3020	1700	10.28
3.0 m	kg							*3940	*3940	*3560	3080	*2910	2140	2890	1560	10.52
1.5 m	kg			*11130	*11130	*6640	*6640	*4950	4220	*4120	2880	*3450	2040	2840	1510	10.52
Ground	kg	*5260	*5260	*10600	*10600	*8250	6130	*5860	3910	*4650	2710	*3530	1950	2930	1550	10.27
-1.5 m	kg	*7500	*7500	*11650	11540	*9150	5810	*6490	3700	4750	2590	*2370	1900	3180	1700	9.75
-3.0 m	kg	*9990	*9990	*14350	11540	*9360	5720	*6700	3620	4710	2550			3710	2030	8.91
-4.5 m	kg	*12960	*12960	*13360	11780	*8830	5800	*6340	3670					*4030	2730	7.62
-6.0 m	kg			*10610	*10610	*7100	6080									

R220LC-9S HIGH WALKER

Rating over-front / Rating over-side or 360 degree

Boom : 5.68m / Arm : 2.40 m / Bucket : 0.92 m³ SAE heaped / Shoe : 600mm triple grouser

Load point height (m)		Load radius										At max. reach		
		1.5 m		3.0 m		4.5 m		6.0 m		7.5 m		Capacity		Reach
														(m)
7.5 m	kg											*3700	*3700	7.31
6.0 m	kg							*4050	*4050			*3790	3480	8.30
4.5 m	kg					*5360	*5360	*4580	*4580	*4260	4030	*3920	3020	8.87
3.0 m	kg					*7130	*7130	*5390	*5390	*4610	3900	4010	2810	9.12
1.5 m	kg					*8720	8370	*6220	5360	*5020	3770	3990	2780	9.08
Ground	kg			*9350	*9350	*9550	8080	*6790	5170	5290	3670	4210	2940	8.75
-1.5 m	kg	*10290	*10290	*14180	*14180	*9620	8020	*6950	5100			*4650	3360	8.07
-3.0 m	kg	*14760	*14760	*12990	*12990	*8950	8120	*6470	5170			*4690	4350	6.94
-4.5 m	kg			*10150	*10150	*7020	*7020							

Boom : 5.68m / Arm : 2.92 m / Bucket : 0.92 m³ SAE heaped / Shoe : 600mm triple grouser

Load point height (m)		Load radius										At max. reach		
		1.5 m		3.0 m		4.5 m		6.0 m		7.5 m		Capacity		Reach
														(m)
7.5 m	kg											*3370	*3370	7.93
6.0 m	kg									*2700	*2700	*3460	3130	8.83
4.5 m	kg							*4110	*4110	*3870	*3870	*3600	2740	9.37
3.0 m	kg			*10440	*10440	*6400	*6400	*4960	*4960	*4290	3930	3680	2560	9.60
1.5 m	kg			*8610	*8610	*8150	*8150	*5860	5380	*4760	3770	3650	2530	9.57
Ground	kg			*9870	*9870	*9260	8080	*6560	5150	*5150	3640	3820	2650	9.25
-1.5 m	kg	*9210	*9210	*13090	*13090	*9600	7940	*6880	5040	5200	3590	4280	2980	8.62
-3.0 m	kg	*12660	*12660	*13780	*13780	*9230	7990	*6670	5060			*4470	3710	7.59
-4.5 m	kg			*11470	*11470	*7860	*7860					*4250	*4250	5.89

Lifting Capacity

R220LC-9S HIGH WALKER

Rating over-front / Rating over-side or 360 degree

Boom : 5.68m / Arm : 3.90 m / Bucket : 0.92 m³ SAE heaped / Shoe : 600mm triple grouser

Load point height (m)		Load radius												At max. reach		
		1.5 m		3.0 m		4.5 m		6.0 m		7.5 m		9.0 m		Capacity		Reach
																(m)
9.0 m	kg													*2750	*2750	7.86
7.5 m	kg											*2220	*2220	*2810	*2810	9.06
6.0 m	kg											*2850	*2850	*2910	2550	9.85
4.5 m	kg											*3140	*3140	*2180	*2180	*3030	2270	10.33
3.0 m	kg									*4060	*4060	*3620	*3620	*2990	2840	3100	2120	10.54
1.5 m	kg			*11630	*11630	*6880	*6880	*5070	*5070	*4190	3770	*3490	2730	3070	2090	10.50
Ground	kg	*5540	*5540	*10590	*10590	*8400	8100	*5960	5130	*4710	3590	*3480	2640	3180	2160	10.22
-1.5 m	kg	*7800	*7800	*11920	*11920	*9220	7800	*6540	4940	*5060	3480			3480	2370	9.67
-3.0 m	kg	*10330	*10330	*14530	*14530	*9340	7730	*6690	4870	5060	3450			*3920	2820	8.78
-4.5 m	kg	*13390	*13390	*13120	*13120	*8690	7840	*6230	4940					*4030	3800	7.41
-6.0 m	kg			*10090	*10090	*6720	*6720									

Boom : 5.68m / Arm : 2.40 m / Bucket : 0.92 m³ SAE heaped / Shoe : 800mm triple grouser

Load point height (m)		Load radius										At max. reach		
		1.5 m		3.0 m		4.5 m		6.0 m		7.5 m		Capacity		Reach
														(m)
7.5 m	kg											*3700	*3700	7.31
6.0 m	kg							*4050	*4050			*3790	3570	8.30
4.5 m	kg					*5360	*5360	*4580	*4580	*4260	4130	*3920	3110	8.87
3.0 m	kg					*7130	*7130	*5390	*5390	*4610	4010	*4080	2890	9.12
1.5 m	kg					*8720	8580	*6220	5500	*5020	3870	4110	2860	9.08
Ground	kg			*9350	*9350	*9550	8290	*6790	5310	*5320	3780	4340	3020	8.75
-1.5 m	kg	*10290	*10290	*14180	*14180	*9620	8230	*6950	5240			*4650	3450	8.07
-3.0 m	kg	*14760	*14760	*12990	*12990	*8950	8330	*6470	5310			*4690	4470	6.94
-4.5 m	kg			*10150	*10150	*7020	*7020							

Boom : 5.68m / Arm : 2.92 m / Bucket : 0.92 m³ SAE heaped / Shoe : 800mm triple grouser

Load point height (m)		Load radius										At max. reach		
		1.5 m		3.0 m		4.5 m		6.0 m		7.5 m		Capacity		Reach
														(m)
7.5 m	kg											*3370	*3370	7.93
6.0 m	kg									*2700	*2700	*3460	3220	8.83
4.5 m	kg							*4110	*4110	*3870	*3870	*3600	2820	9.37
3.0 m	kg			*10440	*10440	*6440	*6440	*4960	*4960	*4290	4030	*3760	2640	9.60
1.5 m	kg			*8610	*8610	*8150	*8150	*5860	5520	*4760	3870	3760	2610	9.57
Ground	kg			*9870	*9870	*9260	8290	*6560	5300	*5150	3750	3940	2730	9.25
-1.5 m	kg	*9210	*9210	*13090	*13090	*9600	8150	*6880	5180	*5300	3690	*4340	3060	8.62
-3.0 m	kg	*12660	*12660	*13780	*13780	*9230	8200	*6670	5200			*4470	3810	7.59
-4.5 m	kg			*11470	*11470	*7860	*7860					*4250	*4250	5.89

1. Lifting capacity is based on SAE J1097, ISO 10567.
2. Lifting capacity of the Robex Series does not exceed 75% of the tipping load with the machine on firm, level ground or 87% of full hydraulic capacity.
3. The load point is a hook located on the back of the bucket.
4. (*) indicates the load limited by hydraulic capacity.

Lifting Capacity

R220LC-9S HIGH WALKER

Rating over-front | Rating over-side or 360 degree

Boom : 5.68m / Arm : 3.90 m / Bucket : 0.92 m³ SAE heaped / Shoe : 800mm triple grouser

Load point height (m)		Load radius												At max. reach		
		1.5 m		3.0 m		4.5 m		6.0 m		7.5 m		9.0 m		Capacity		Reach
																(m)
9.0 m	kg													*2750	*2750	7.86
7.5 m	kg									*2220	*2220			*2810	*2810	9.06
6.0 m	kg									*2850	*2850			*2910	2620	9.85
4.5 m	kg									*3140	*3140	*2180	*2180	*3030	2340	10.33
3.0 m	kg							*4060	*4060	*3620	*3620	*2990	2920	*3180	2190	10.54
1.5 m	kg			*11630	*11630	*6880	*6880	*5070	*5070	*4190	3870	*3490	2820	3170	2160	10.50
Ground	kg	*5540	*5540	*10590	*10590	*8400	8310	*5960	5270	*4710	3700	*3480	2730	3280	2230	10.22
-1.5 m	kg	*7800	*7800	*11920	*11920	*9220	8010	*6540	5080	*5060	3580			3590	2450	9.67
-3.0 m	kg	*10330	*10330	*14530	*14530	*9340	7940	*6690	5010	*5090	3550			*3920	2900	8.78
-4.5 m	kg	*13390	*13390	*13120	*13120	*8690	8050	*6230	5080					*4030	3910	7.41
-6.0 m	kg			*10090	*10090	*6720	*6720									

R220LC-9S LONG REACH

Rating over-front | Rating over-side or 360 degree

Boom : 8.2m / Arm : 6.3 m / Bucket : 0.52 m³ SAE heaped / Shoe : 800mm triple grouser

Load point height (m)		Load radius														At max. reach		
		4.5 m		6.0 m		7.5 m		9.0 m		10.5 m		12.0 m		13.5 m		Capacity		Reach
																		(m)
10.5 m	kg															*1480	*1480	12.11
9.0 m	kg											*930	*930			*1510	*1510	13.11
7.5 m	kg											*1550	*1550			*1550	1320	13.84
6.0 m	kg									*1600	*1600	*1610	*1610			*1600	1160	14.37
4.5 m	kg									*1790	*1790	*1730	1720	*1260	*1260	*1660	1050	14.72
3.0 m	kg					*2520	*2520	*2220	*2220	*2020	*2020	*1880	1630	*1590	1220	*1720	980	14.89
1.5 m	kg	*5620	*5620	*3940	*3940	*3090	*3090	*2590	*2590	*2270	2000	*2050	1530	*1790	1170	*1800	940	14.90
Ground	kg	*6990	6720	*4770	4490	*3620	3240	*2950	2430	*2510	1860	*2220	1440	*1820	1110	1880	930	14.75
-1.5 m	kg	*7830	6210	*5390	4120	*4060	2990	*3260	2260	*2740	1740	*2380	1360	*1570	1070	1930	960	14.42
-3.0 m	kg	*8230	5990	*5780	3920	*4370	2830	*3490	2140	*2900	1660	*2490	1310			2030	1020	13.92
-4.5 m	kg	*8310	5940	*5950	3830	*4540	2740	*3630	2070	*3000	1620	2510	1290			*2210	1140	13.20
-6.0 m	kg	*8100	6010	*5900	3840	*4550	2730	*3640	2060	*2970	1620					*2340	1330	12.25
-7.5 m	kg	*7580	6180	*5610	3930	*4350	2790	*3460	2120	*2740	1690					*2460	1670	10.97
-9.0 m	kg	*6650	6460	*4980	4110	*3840	2940	*2930	2260									
-10.5 m	kg	*5040	*5040	*3730	*3730													

1. Lifting capacity is based on SAE J1097, ISO 10567.
2. Lifting capacity of the Robex Series does not exceed 75% of the tipping load with the machine on firm, level ground or 87% of full hydraulic capacity.
3. The load point is a hook located on the back of the bucket.
4. (*) indicates the load limited by hydraulic capacity.

STANDARD EQUIPMENT

ISO Standard cabin
- All-weather steel cab with 360° visibility
- Safety glass windows
- Rise-up type windshield wiper
- Sliding fold-in front window
- Sliding side window(LH)
- Lockable door
- Hot & cool box
- Storage compartment & Ashtray
- Radio & USB player
- Cabin roof-steel cover
- 12 volt power outlet (24V DC to 12V DC converter)

Computer aided power optimization (New CAPO) system
- 3-power mode, 2-work mode, User mode
- Auto deceleration & one-touch deceleration system
- Auto warm-up system
- Auto overheat prevention system

Automatic climate control
- Air conditioner & heater
- Defroster

Self-diagnostics system

Starting Aid (air grid heater) for cold weather

Centralized monitoring
- LCD display
- Engine speed or Trip meter/Accel.
- Clock
- Gauges
- Fuel level gauge
- Engine coolant temperature gauge
- Hyd. oil temperature gauge
- Warnings
- Check engine
- Overload
- Communication error
- Low battery
- Air cleaner clogging
- Indicators
- Max power
- Low speed/High speed
- Fuel warmer
- Auto idle

Door and cab locks, one key

Two outside rearview mirrors

Fully adjustable suspension seat

Pilot-operated slidable joystick

Four front working lights

Electric horn

Batteries (2 x 12V x 100 AH)

Battery master switch

Removable clean-out dust net for cooler

Automatic swing brake

Removable reservoir tank

Fuel pre-filter

Boom holding system

Arm holding system

Track shoes (600mm, 24")

Track rail guard

Accumulator for lowering work equipment

Electric transducer

Lower frame under cover (Normal)

OPTIONAL EQUIPMENT

Fuel filler pump (35 L/min)

Beacon lamp

Single-acting piping kit (breaker, etc.)

Double-acting piping kit (clamshell, etc.)

Quick coupler

Travel alarm

Booms
- 5.68 m, 18' 8"
- 8.2 m, 26' 11" Long reach

Arms
- 2.0 m, 6' 7"
- 2.4 m, 7' 10"
- 2.92 m, 9' 7"
- 3.9 m, 12' 10"
- 6.3 m, 20' 8" Long reach

Cabin FOPS/FOG (ISO/DIS 10262 Level II)
- FOPS (Falling Object Protective Structure)
- FOG (Falling Object Guard)

Cabin guard-front
- Wire net
- Fine net

Cabin ROPS (ISO 12117-2)
- ROPS (Roll Over Protective Structure)
- *220LC-9S/220-9S Only

Cabin lights

Cabin front window rain guard

Sun visor

Track shoes
- Triple grousers shoe (700 mm, 28")
- Triple grousers shoe (800 mm, 32")
- Triple grousers shoe (900 mm, 36")
- Double grousers shoe (700 mm, 28")
- Full track rail guard

Lower frame under cover (Additional)

Pre-heating system, coolant

Tool kit

Rearview camera

Seat
- Mechanical suspension seat with heater

Hi-mate (Remote Management System)

Fuel warmer

Air compressor

Rear work lamp

Precleaner

4 Pattern changer

Cabin Rain Guard

* Standard and optional equipment may vary. Contact your Hyundai dealer for more information. The machine may vary according to International standards.
* The photos may include attachments and optional equipment that are not available in your area.
* Materials and specifications are subject to change without advance notice.
* All imperial measurements rounded off to the nearest pound or inch.