구 분	케이싱 (Casing)	임펠러 (Impeller)	주축 (Shaft)	축봉장치 (Sealing)
기본재질 (Standard)	GC200	GC200	STS410	Mechanical Seal
옵션재질 (Option)	SSC13, SSC14	SSC13, SSC14	STS304, STS316, STS403	

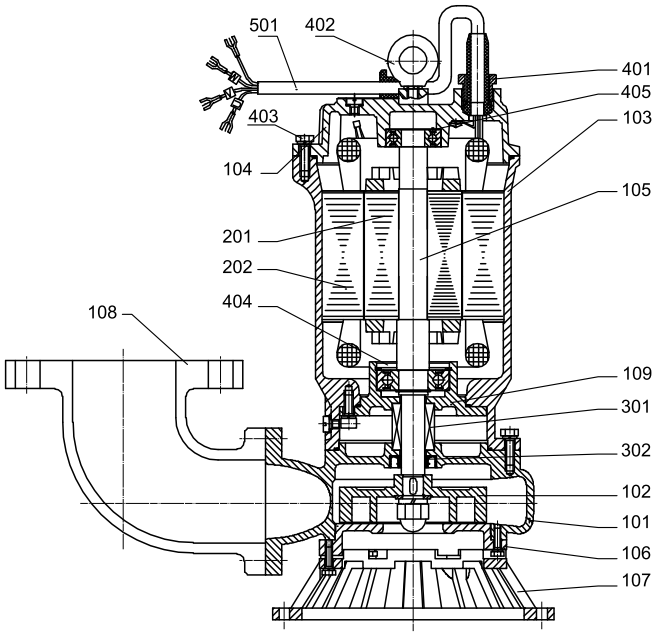

IT. NO.	PART NAME	MATERIAL
101	CASING	GC 200
102	IMPELLER	GC 200
103	MOTOR FRAME	GC 200
104	MOTOR BRACKET	GC 200
105	SHAFT	STS 410
106	SUCTION COVER	GC 200
107	SUCTION STAND	GC 200
108	DISCHARGE ELBOW	GC 200
109	BEARING HOUSING	GC 200
201	ROTOR	-
202	STATOR	-
301	MECHANICAL SEAL	-
302	OIL SEAL	NBR
401	CABLE COVER	SS 400
402	EYE BOLT	SS 400
403	BOLT	STS 304
404	BEARING COVER	SS 400
405	BEARING	-
501	POWER CABLE	-

Model	A	B	C	D	ϕE	F	H	L
DWE-08B	420	309	111	231	221	190	389	145
DWE-15B	420	309	111	231	221	190	416	145
DWE-22B	470	350	120	257	240	222	430	165
DWE-37B	470	350	120	257	240	222	460	165
DWE-55B	515	389	123	296	245	241	560	210
DWE-75B	534	411	123	306	245	266	615	210
DWE-110B	620	460	170	330	360	300	895	240
DWE-150B	620	460	170	330	360	300	895	240





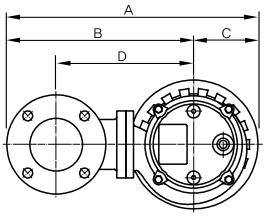

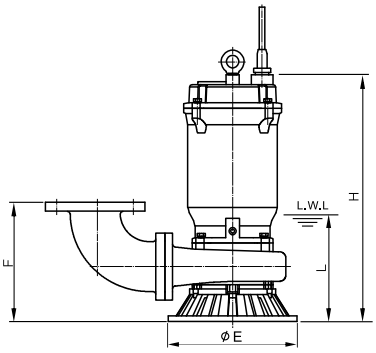

◈단상용 수중펌프





MODEL	토출구경 (Dis.)	출 력 (HP)	전양정 (m)	토출량 (m^3/min)	중량 (kg)
DWE-04M(F)	50	0.5	8	0.10	19
DWE-08M(F)		1	10	0.16	28.5