desco drill rig

Desco Inc.(HQ/Manufacturer)
HEAD OFFICE: 1240-1, Ok-Dong, Gwangsan, Gwangju, Korea
TEL : 82.62.952.4564 / FAX : 82.62.953.1593
EXPORT DIVISION
2607 jidong, Lottecastle, 76, Soongin-Dong, Jongno-Gu, Seoul, Korea
TEL : 82-2-3670 6400 / FAX : 82-2-3670 6399
E-mail : desco@desco-inc,com

MUD PUMP

TECHNICAL SPECIFICATION

Description	Unit	Specification				
		DSMP200	DSMP300	DSMP600	DSMP800	DSMP1000
RATIO		1.6:1	2.5:1	3.2:1	3.2:1	3.2:1
Type		Double acting, Duplex Piston				
Dia of Cylinder	mm	80	100	125	180	180
Capacity of water	ℓ/min	150	300	600	800	1000
Max. capacity of water	ℓ/min	200	400	800	1000	1200
Max. water Pressure	kg/cm2	70	70	70	70	70
Dia of output hole	mm	25	25	50	50	50
Dia of input hole	mm	35	35	63	63	63
Stroke Length	mm	125	160	175	250	250
No. of Stroke		62	61	73	33	40
Oil Flow	ℓ/min	50	60	100	130	160
Max. oil pressure	kg/cm2	120	190	260	180	180
Type of valve	-	Ball	Ball	Check valve	Check valve	Check valve
Hyd. System		Sensing valve				
Dimension	mm	260*270*1000	305*300*1100	520*850*1320	690*940*2000	690*940*2000
Weight	kg	165	200	450	600	700

If you want the kind of drill rigs,
DESCO INC. is at your solution and service.

DSMP600 (Middle-class mud pump)

* Full hydraulic system
* Duplex piston & double acting
* Sensitively variable water volume control by hydraulic (50 ~ 600LPM)
* Application for rotary drilling, diamond core drilling
* Simple design - easy operation & maintenance
* Economic assembly for spare part
* Less water wave



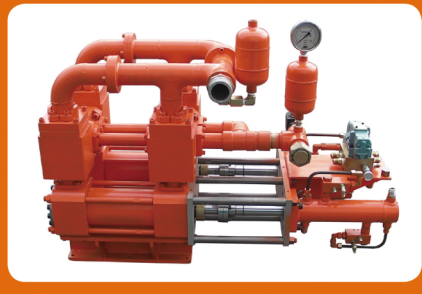

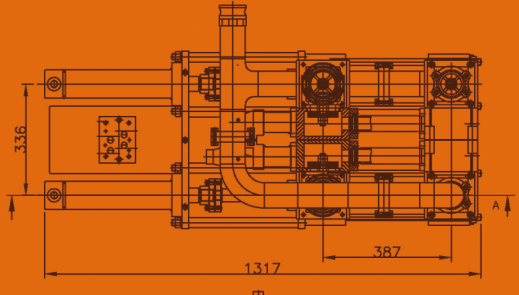

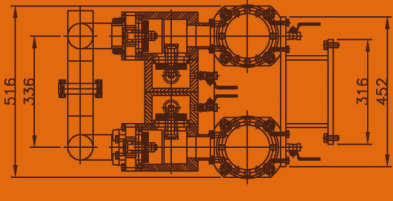

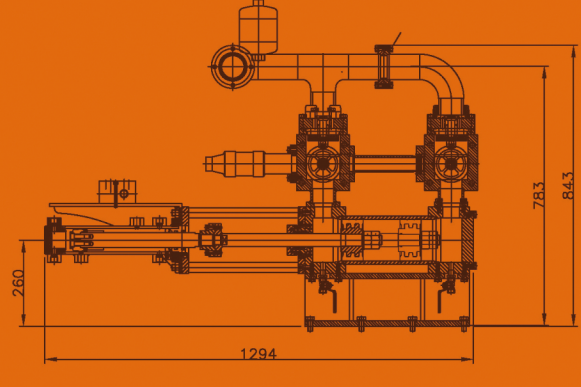

SECTION : A-A

If you want the kind of drill rigs, DESCO INC. is at your solution and service.