surgeZERO : Class II / DS40, DT50



▲ 1P2W



▲ 3P3W



▲ 3P4W

- LED 동작상태 표시 기능
- Mov Fault Alarm 기능 (Option)
- Module 분리형

- LED indicators for fault and Power
- Remote contact is option
- Potential free signal contact is option

Technical data

Model		DS40/275(V+T)	DT50/275(3V)	DT50/275(3V+T)
Electrical characteristics		1P2W	3P3W	3P4W
Max. continuous operating voltage (AC/DC)	U_C	275V	275V	275V
	U_C (N–PE)	255V	–	255V
Nominal discharge current (8/20)	I_n (L–N/N–PE)	20kA	20kA	20kA
Max. discharge current (8/20)	I_{max} (L–N/N–PE)	40kA	50kA	50kA
Protection level at In	U_p	〈1.3kV	〈1.3kV	〈1.3kV
	U_p (N–PE)	〈1.3kV	–	〈1.3kV
Response time	tA (L–N/N–PE)	〈25ns/100ns	〈25ns	〈25ns/100ns
Thermal protection	(L–N)	Yes	Yes	Yes

Mechanical characteristics	1P2W	3P3W	3P4W
Temperature range	−40℃~+80℃		
Mounting	DIN rail 35mm		
Degree of protection	IP20		
Housing material	Thermoplastic; extinguishing degree UL 94 V–0		
Indication of disconnector operation	Green (Normal) / Red (Fail)		
Remote contacts (RC)	Yes (Option)		
Contact ratings	AC 250V/1A		

DS40/275(V+T) 1P2W

Dimension

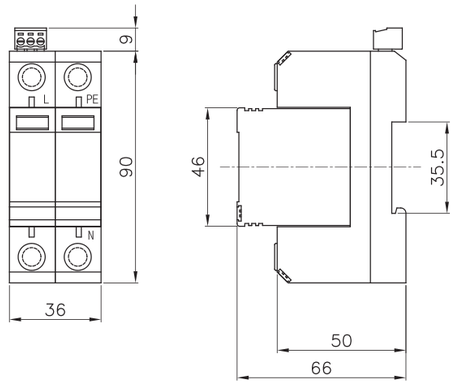

Internal configuration

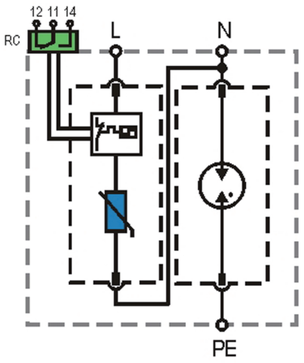

DT50/275(3V) 3P3W

Dimension

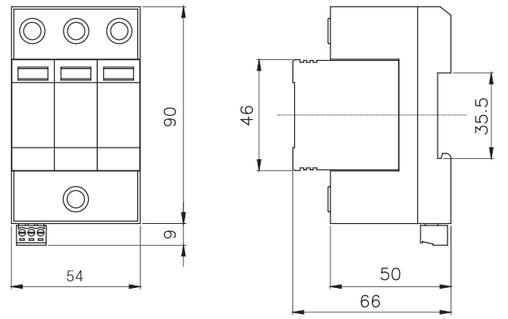

Internal configuration

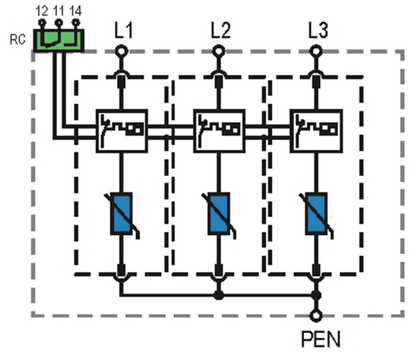

DT50/275(3V+T) 3P4W

Dimension

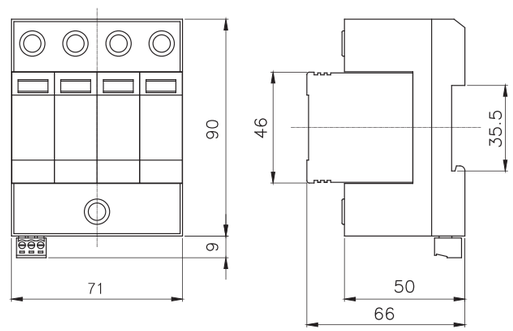

Internal configuration

