조명기구 보호용 / 전기차 충전기 보호용

surgeZERO Class II / SZE-L-1P2W / 3P4W



▲ SZE-L-1P2W(2+1)

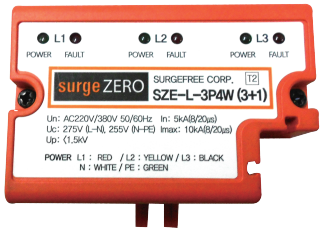

▲ SZE-L-3P4W(3+1)

Technical data

Model		SZE-L-1P2W / 3P4W	
Electrical characteristics		SZE-L-1P2W	SZE-L-3P4W
Nominal operating voltage	U_n	220V	220/380V
Max. continuous operating voltage	U_c	275V	275V
	U_c (N-PE)	255V	255V
Nominal discharge current (8/20)	I_n	5kA	5kA
Max. discharge current (8/20)	I_{max}	10kA	10kA
Voltage protection level at I_n	U_p	〈1.5kV	
Response time	tA(L-N/N-PE)	〈25ns/100ns	〈25ns
Temperature range		-40℃~+80℃	
Degree of protection		IP20	
Mounting		1 x M3 Bolt	

Dimension / Internal configuration

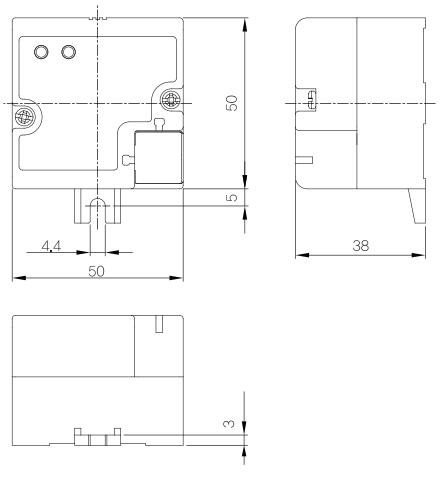

▲ SZE-L-1P2W(2+1)

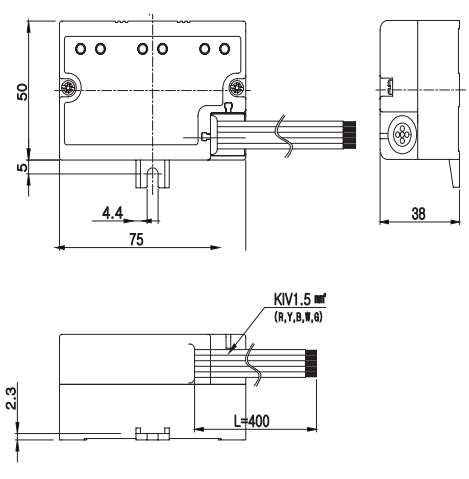

▲ SZE-L-3P4W(3+1)