ROTARY JOINT - SERIES 3000



Operating Condition

Size Range : 15A~80A (½″~3″)
Max. Pressure : 15kg/cm² (210PSI)
Max. Rotation Speed :
15A~25A(½" ~1") : 300RPM
32A~80A(1¼" ~3") : 150RPM
Max. Temperature : 220℃ (420℉)
Media : Steam
* Avoid max. pressure at max. rpm operation

Features / 특징

- Spherical Sealing
- Two Widely-Spaced Carbon Bearing
- Self-supported & Alignment rotating union
- Easily field repairable
- For Steam media
- Non-Lubrication type

- 2개의 Carbon Bearing과 구면 Seal을 사용하여 자체지지형, 자기 조심의 구조로 설계되었으며 구조가 간단하여 보수가 용이합니다.
- 무 주유형으로 스팀용에 적당합니다.

* 최고회전수 조건에서 최고압력 사용을 피하여 주십시오.

단식 [SINGLE]

KR3011
KR3012

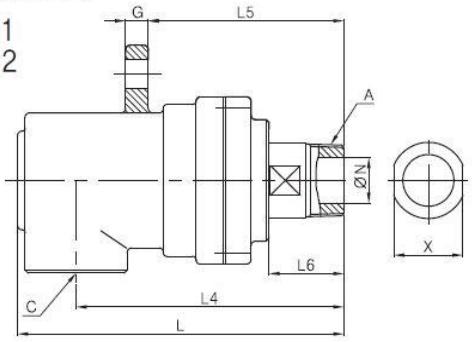

KR3015

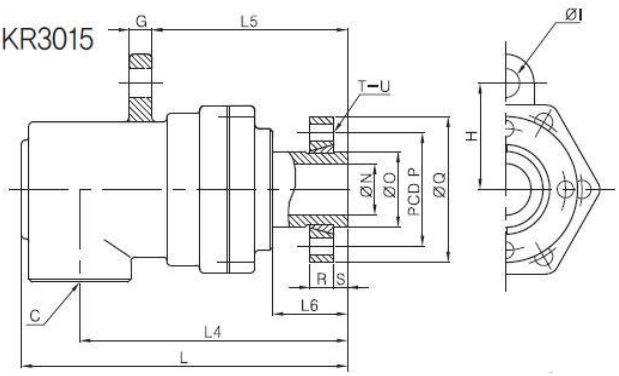

[unit : mm]

MODEL NO. PT [RH]	MODEL NO. PT [LH]	A (PT)	C (PT)	G	H	I	L	L4	L5	L6	N	X	Wt (kg)
KR3011-15A	KR3012-15A	1/2"	1/2"	12	49	Ø15	142	117	89	33	14	21	2
KR3011-20A	KR3012-20A	3/4"	3/4"	9	55	Ø14	160	132	98	38	18	26	2.6
KR3011-25A	KR3012-25A	1"	1"	10	65	Ø14	180	144	113	43	23	32	3.6
KR3011-32A	KR3012-32A	1-1/4"	1-1/2"	12	70	Ø19	216	176	129	49	30	46	6.6
KR3011-40A	KR3012-40A	1-1/2"	1-1/2"	12	70	Ø19	216	176	129	49	34	46	6.6
KR3011-50A	KR3012-50A	2"	2"	16	92	Ø23	248	192	158	63	48	60	10.2
KR3011-65A	KR3012-65A	2-1/2"	2-1/2"	18	110	Ø23	267.5	206.5	170.5	64.5	60	75	13.7
KR3011-80A	KR3012-80A	3"	3"	24	125	Ø25	320.5	262.5	198.5	72.5	70	85	24.5

MODEL NO. FLANGE	C (PT)	G	H	I	L	L4	L5	L6	N	O	P	Q	R	S	T	U	Wt (kg)
KR3015-15A	1/2"	12	49	Ø15	142	117	89	40	14	25	45	62	11	8	4	Ø9	2.2
KR3015-20A	3/4"	9	55	Ø14	160	132	98	38	18	30	54	74	13	8	4	Ø11	3
KR3015-25A	1"	10	65	Ø14	180	144	113	43	23	35	60	80	14	9	4	Ø11	4
KR3015-40A	1-1/2"	12	70	Ø19	216	176	129	49	34	50	75	96	16	9	4	Ø11	7
KR3015-50A	2"	16	92	Ø23	248	192	156	63	48	65	95	120	19	10	4	Ø11	12
KR3015-65A	2-1/2"	18	110	Ø23	263	210	166	60	60	80	110	136	20	12	4	Ø14	15.2
KR3015-80A	3"	24	125	Ø25	318	260	196	70	70	90	125	154	20	12	6	Ø14	27.5



복식 내관 고정 [DUPLEX I STATIONARY SYPHON]

KR3001 / KR3002

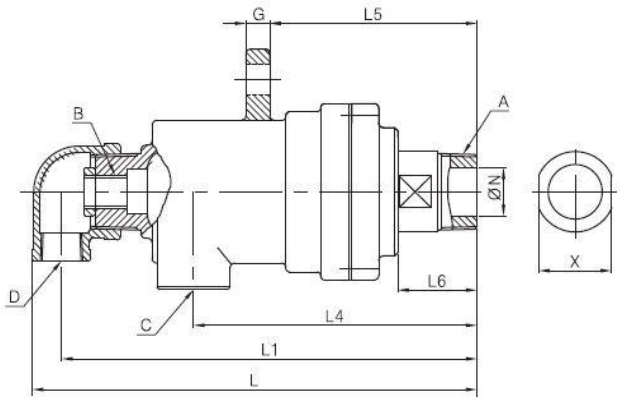

KR3005

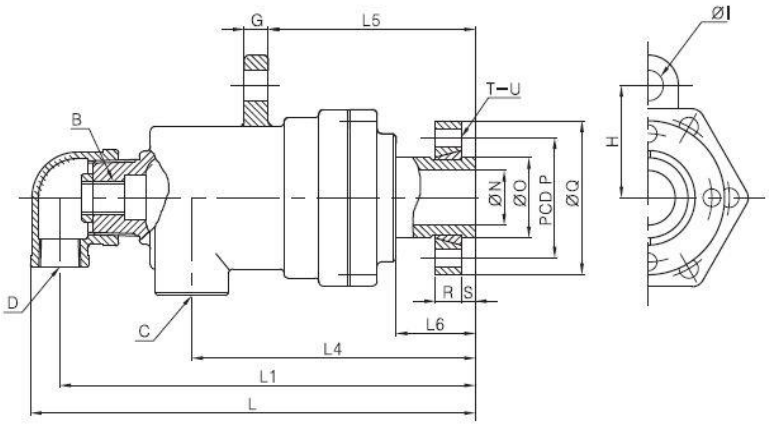

[unit : mm]

MODEL NO. PT [RH]	MODEL NO. PT [LH]	A (PT)	B (PF)	C (PT)	D (PT)	G	H	I	L	L1	L4	L5	L6	N	X	Wt (kg)
KR3001-15A-6A	KR3002-15A-6A	1/2"	1/8"	1/2"	1/2"	12	49	Ø15	192	178	117	89	33	14	21	2.2
KR3001-20A-8A	KR3002-20A-8A	3/4"	1/4"	3/4"	3/4"	9	55	Ø14	221	204	132	98	38	18	26	3
KR3001-25A-10A	KR3002-25A-10A	1"	3/8"	1"	3/4"	10	65	Ø14	243	226	144	113	43	23	32	4
KR3001-32A-15A	KR3002-32A-15A	1-1/4"	1/2"	1"	3/4"	12	70	Ø19	272	253	176	125	49	30	46	6
KR3001-40A-20A	KR3002-40A-20A	1-1/2"	3/4"	1"	3/4"	12	70	Ø19	272	253	176	125	49	34	46	6
KR3001-50A-25A	KR3002-50A-25A	2"	1"	1-1/2"	1"	16	92	Ø23	324	303	204	156	63	48	60	10.5
KR3001-65A-40A	KR3002-65A-40A	2-1/2"	1-1/2"	2"	1-1/2"	18	110	Ø23	360.5	332.5	214.5	170.5	64.5	60	75	15.5
KR3001-80A-50A	KR3002-80A-50A	3"	2"	2-1/2"	2"	24	125	Ø25	434.5	394.5	262.5	198.5	72.5	70	85	27

MODEL NO. FLANGE	B (PF)	C (PT)	D (PT)	G	H	I	L	L1	L4	L5	L6	N	O	P	Q	R	S	T	U	Wt (kg)
KR3005-15A-6A	1/8"	1/2"	1/2"	12	49	Ø15	192	178	117	89	40	14	25	45	62	11	8	4	Ø9	2.4
KR3005-20A-8A	1/4"	3/4"	3/4"	9	55	Ø14	221	204	132	98	38	18	30	54	74	13	8	4	Ø11	3.4
KR3005-25A-10A	3/8"	1"	3/4"	10	65	Ø14	243	226	144	113	43	23	35	60	80	14	9	4	Ø11	4.3
KR3005-40A-20A	3/4"	1"	3/4"	12	70	Ø19	272	253	176	129	49	34	50	75	96	16	9	4	Ø11	7
KR3005-50A-25A	1"	1-1/2"	1"	16	92	Ø23	324	303	204	156	63	48	65	95	120	19	10	4	Ø14	12
KR3005-65A-40A	1-1/2"	2"	1-1/2"	18	110	Ø23	356	328	210	166	60	60	80	110	136	20	12	4	Ø14	17
KR3005-80A-50A	2"	2-1/2"	2"	24	125	Ø25	432	392	260	196	70	70	90	125	154	20	12	6	Ø14	30