WY42–AW Series (복권)

CE RoHS

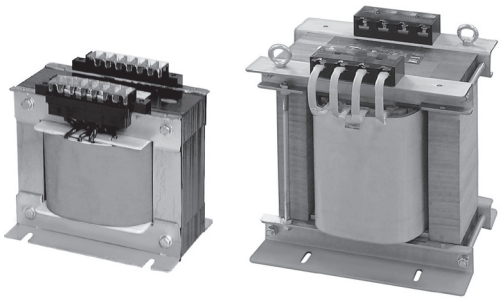

단상 복권형으로 입력은 AC380V, 440V이며 출력은 AC110V, 220V H종 건식으로 전체 진공 함침하여 열악한 환경에서도 견딜 수 있는 제품으로 50KVA까지 CE인증을 획득하여 제품 신뢰성을 확보한 제품입니다.

Input is AC380V, 440V by single phase double winding type and output is AC110,220V. This transformer is H insulation class and enforcing vacuum varnish immersion acquire CE certification to 50KVA by product that can bear in worst environments and is product that secure reliability.

• Circuit Diagram

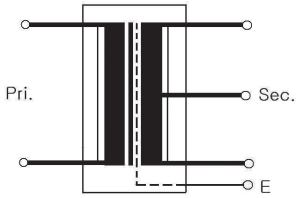

Specifications

MODEL NO.	TYPE	SPECIFICATIONS		VA	DIMENSIONS (m/m)								WEIGHT (kg)
		PRI.(V)	SEC.(V)		W	H	D	b	d	e	Ø2	M	
• 380V, 440V Line → 220V Line													
WY42 - 10KAW	WT	0-380-420 -440	0-110-200 -220-(E)	10K	310	305	250	220	160	16	10 X 30	6	68.00
WY42 - 15KAW				15K	310	305	280	220	180	16	10 X 35	6	74.00
WY42 - 20KAW				20K	360	385	360	270	200	16	12 X 40	6	112.20
WY42 - 30KAW			0-110-220-(E)	30K	380	450	300 (MAX380)	200	225	16	11 X 41	6	162.60
WY42 - 40KAW				40K	480	580	380	300	240	20	13 X 35	8	215.00
WY42 - 50KAW				50K	490	580	390	300	240	20	13 X 35	8	221.00

※ 3KVA 이상 " I "Bolt 부착 (Attach an " I " bolt for 3KVA or larger)
※ 정격용량 : 최대전압(TAP)에서의 용량임.
※ Rated capacity : Capacity at the maximum voltage(TAP).

Dimension

• WT Type

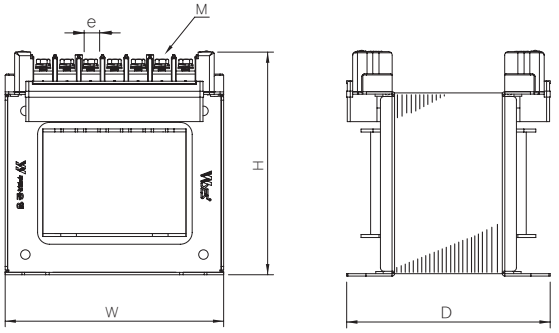

Terminal

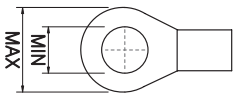

10~30kVA : Max 15, Min 6
40~50kVA : Max 19, Min 8