Ref no. JDB20-002

JXZ33-4.16H

DATA SHEET

TRUCK MOUNTED BOOM PUMP

JUNJIN CONCRETE PUMPS

33M Truck Mounted Boom Pump with 158㎥/h Output Z Type Boom Design

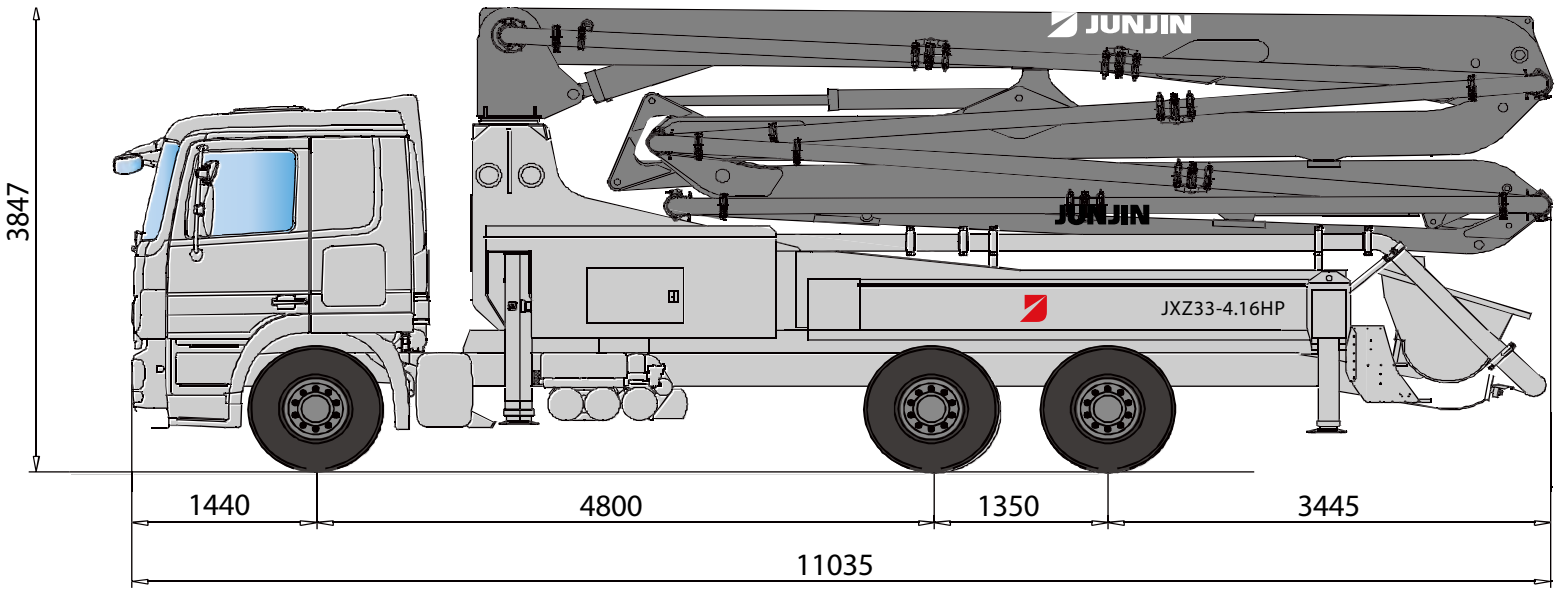

* Remark : Standard specification with MB2641. Dimension depends on truck specification.

TECHNICAL SPECIFICATION

GENERAL SPECIFICATION	
Delivery Line	DN 125 / 5"
Radio remote	Proportional control
Wear plate / Ring	Tungsten Carbide
Water Pump	20 Bar
Water Tank	500 Liter
Auto Lubrication	Hyd. grease, Hopper

PUMP SPECIFICATION		
Output	Rod	158 ㎥/h
	Piston	98 ㎥/h
Pressure	Rod	72 Bar
	Piston	115 Bar
Delivery Cylinder (Hard-chromed)	Φ230 mm	
Stroke Length	2100 mm	
S-Valve	8" X 7"	
Main Oil Pump	Rexroth Hydromatic	
System Pressure	350 Bar	
Switching Type	Hydraulic	
Hopper Capacity	600 Liter	

BOOM SPECIFICATION	
Number of booms	4 Sections
Folding Type	Z
Vertical Height	32.5 m
Horizontal Reach	28.5 m
Unfolding height	7.6 m
End-Hose Length	3.0 m
1st Section	8.0 m
2nd Section	6.85 m
3rd Section	6.85 m
4th Section	6.8 m

* All technical data are theoretical values and Specification are subject to change without prior notice.
* www.junjin.com

Ref no. JDB20-002

JXZ33-4.16H

DATA SHEET

TRUCK MOUNTED BOOM PUMP

JUNJIN CONCRETE PUMPS

33M Truck Mounted Boom Pump with 158㎥/h Output Z Type Boom Design

BOOM WORKING DIAGRAM

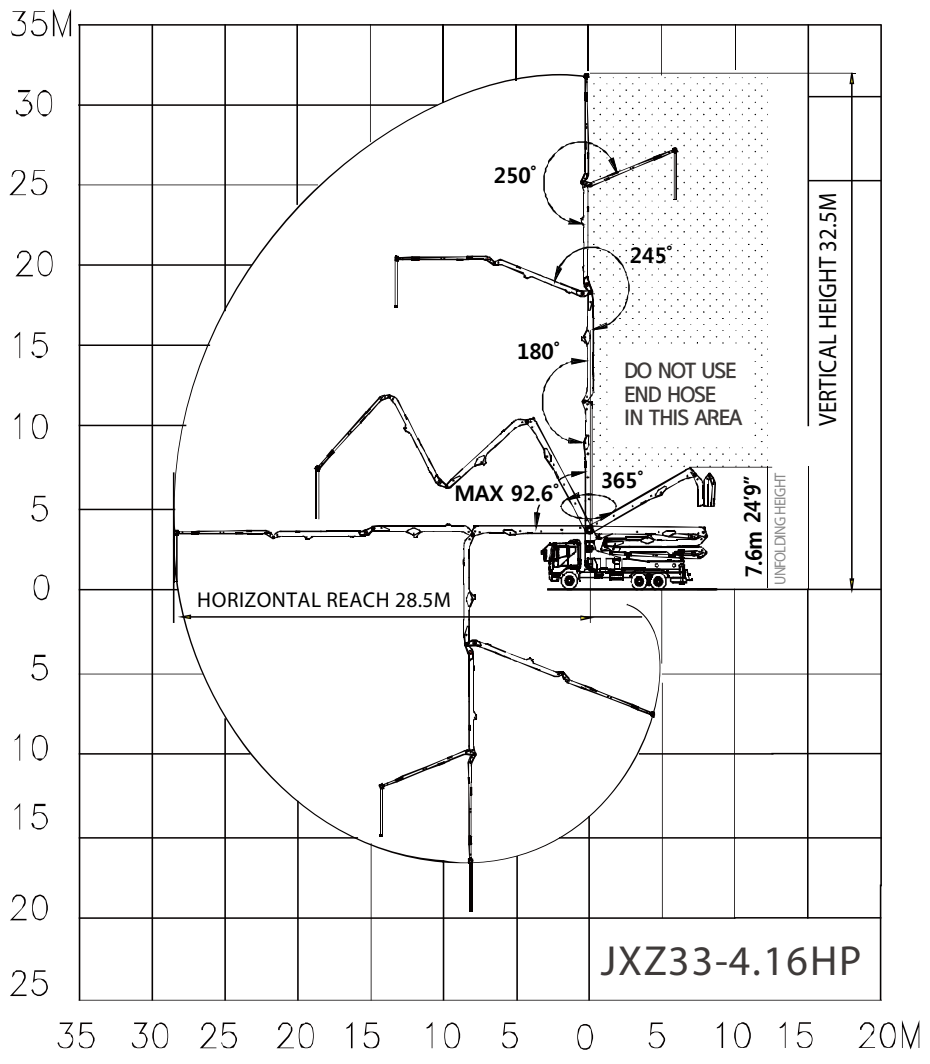

OUTRIGGER SPAN

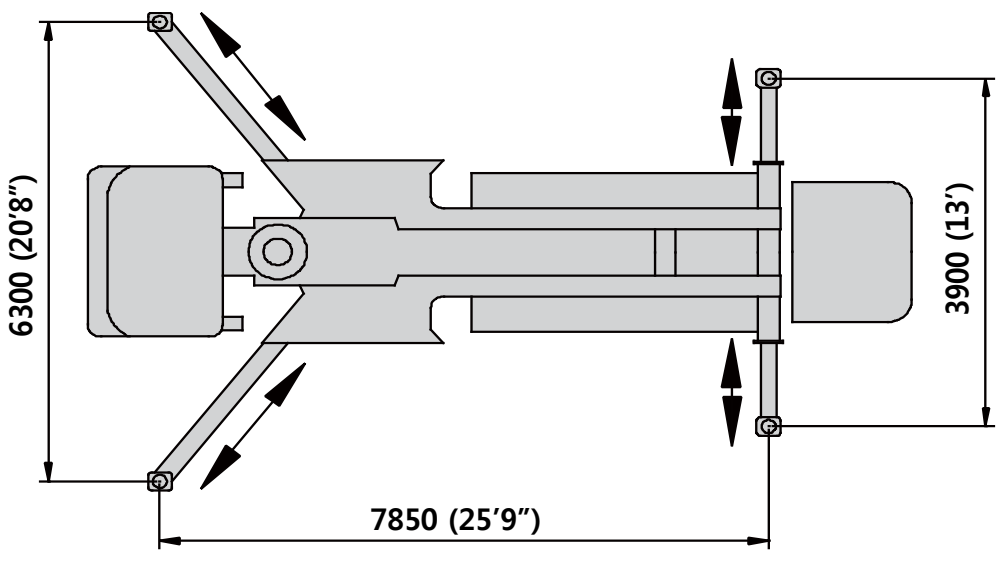

* All technical data are theoretical values and Specification are subject to change without prior notice.
* www.junjin.com