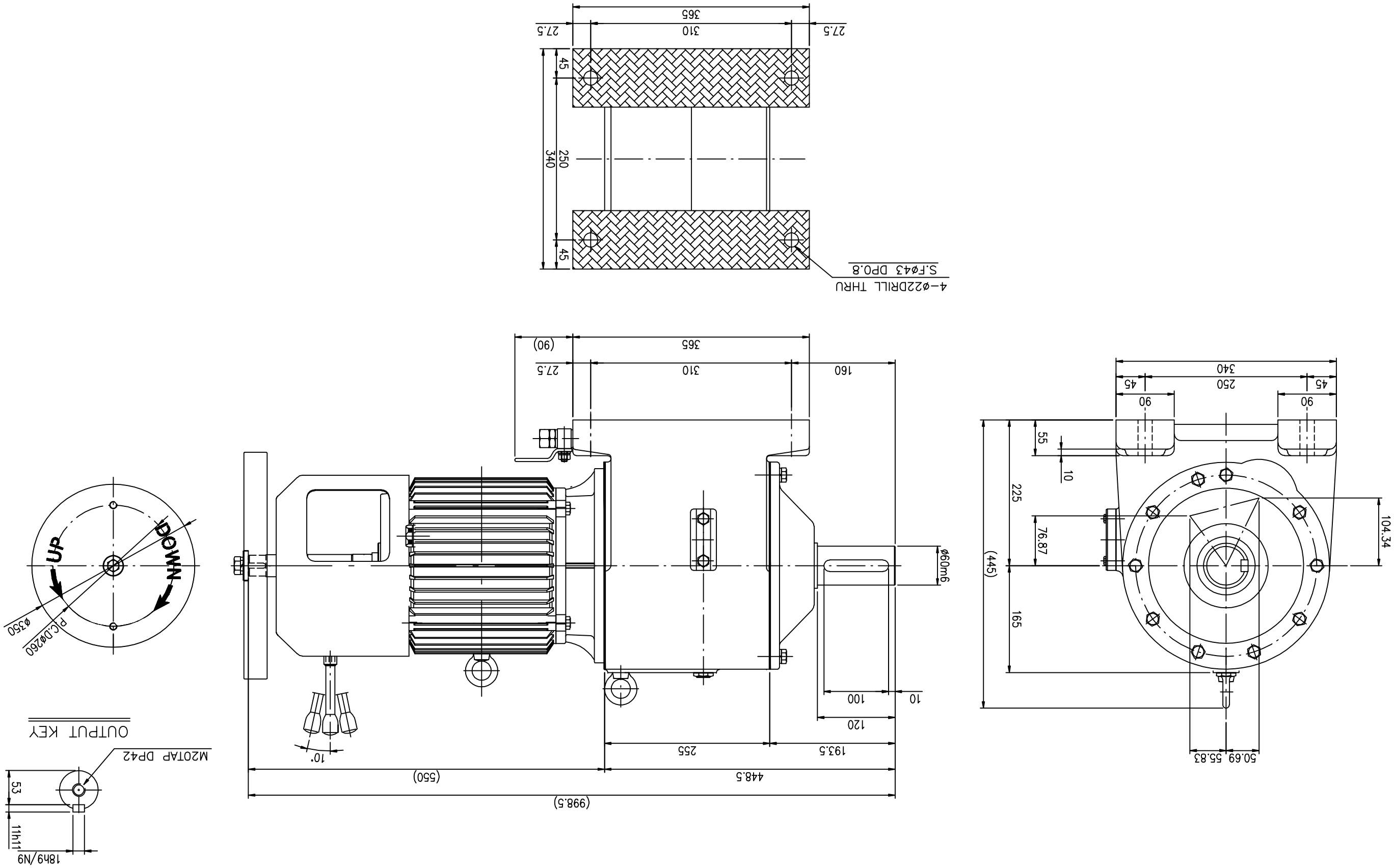

365
310
27.5
27.5
45
250
340
45
4-ø22DRILL THRU
S.Fø43 DP0.8
(90)
365
27.5
310
160
ø60m6
100
10
120
255
193.5
10°
(550)
448.5
(998.5)
340
45
250
45
90
90
55
10
225
76.87
(445)
165
104.34
50.69
55.83
UP
DOWN
ø350
P.C.Dø260
OUTPUT KEY
M20TAP DP42
53
11h11
18h9/N9