SR-Series

Pressure Regulating Valves
Direct Spring Loaded Self Regulating Valves

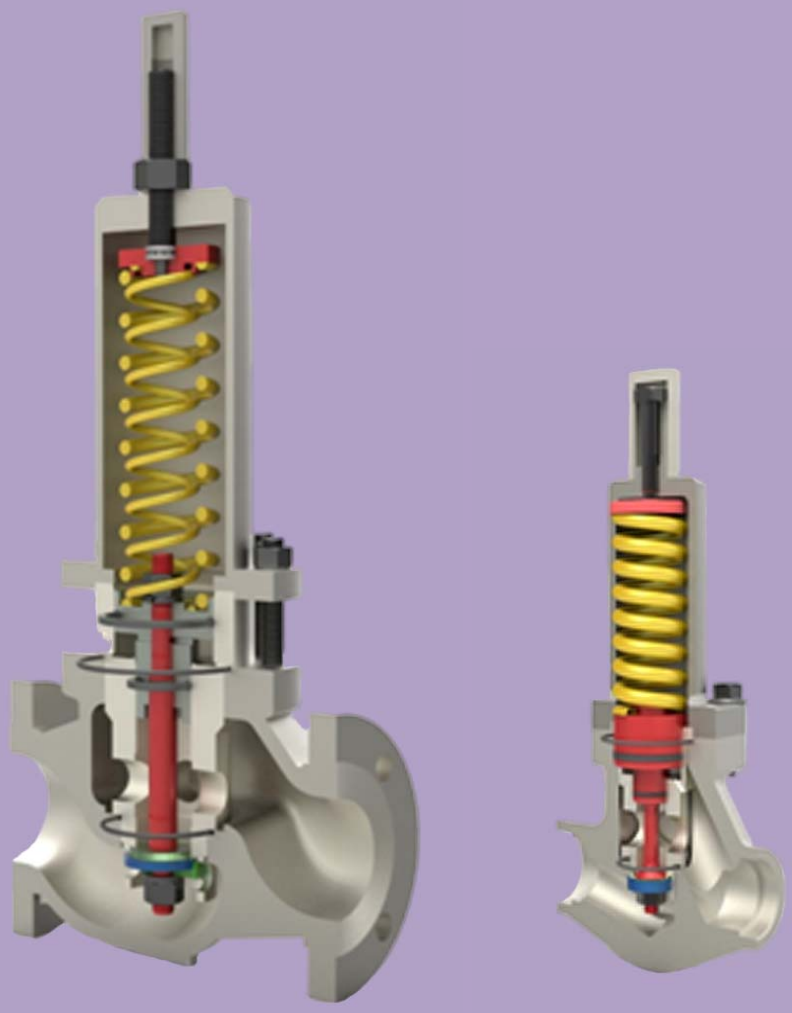

SR-2000 SERIES

PRESSURE REDUCING VALVES / BACK PRESSURE CONTROL VALVES

FEATURE

SR-2000 series Pressure Reducing Valves combines many of the positive aspects of the regulator and control valve. This Pressure Reducing valve is a globe valve that uses a linear plug to lift into a seat to close the valve, much like a globe control valve. The direct acting cylinder or diaphragm actuator is integral design of the body with internal or external sensing design. Overall this design provides minimal offset of the regulating pressure, as well as tight shutoff without excessive actuator force.

The SR-2000 Pressure Regulating Valve is ideal for throttling liquids and gases. It has a modified linear flow characteristics, which is the only over flow direction for reducing valves and under flow direction for back pressure control valves.

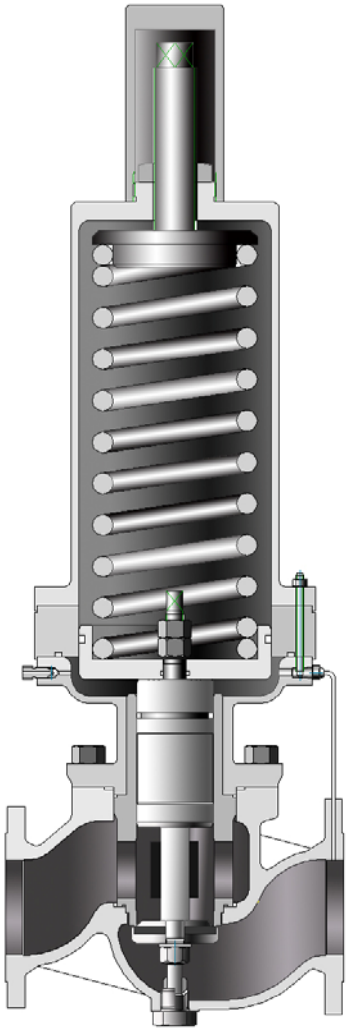

Technical data

Nominal Size	1” ~ 20” (25~500mm)
ANSI class Rating	150, 300, 600,900,1500, 2500,
Seat Tightness	ANSI class VI (Bubble tight)
Rangeability	20 : 1
Temperature Range	-50 up to + 260 °C
Flow Characteristic	Linear (modified)
Connection	SW,BW,RF,RTJ, Etc.
Actuator	Diaphragm, Cylinder
Control signal	Self

Body material: carbon steel or stainless steel, special steel alloys.

Seat material: soft (Teflon, Carbon Teflon, NBR, EPDM, VITON)

Cv VALUES & DIMENSIONS

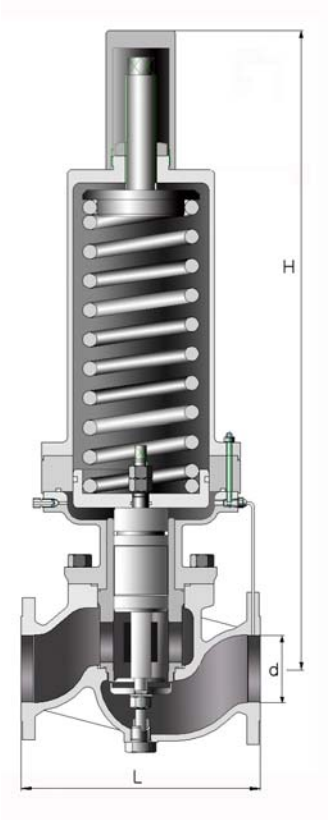

Cv table

Size	Port Area %	Cv (max)
1”	80	4
1.5	85	8
2”	80	16
2.5”	80	25
3”	85	36
4”	88	64
6”	87	144
8”	89	256
10”	81	400
12”	84	576
14”	84	784
16”	84	1024
18”	88	1296
20”	70	1600

Dimensions

Size	d	L			H (approx.)
INCH	**mm**	**150LB**	**300LB**	**600LB**	**mm**
1”	25	184	190	203	143
1.5	40	222	235	251	148
2”	50	254	267	286	155
2.5”	65	276	292	311	176
3”	80	298	318	337	183
4”	100	352	368	394	197
6”	150	451	473	508	241
8”	200	543	568	610	282
10”	250	673	708	752	340
12”	300	737	775	819	365
14”	350	889	927	972	390
16”	400	1016	1057	1108	471
18”	450	1210	1210	1251	502
20”	500	1388	1388	1527	518

FORGED PRESSURE REDUCING VALVES / BACK PRESSURE CONTROL VALVES

Features

- High strength forged body
- Internal sensed compact design
- Piston sensing for high pressure control
- Set pressure ranges field adjustable
- Balanced design for rapid transition service
- Back pressure design available
- Top entry design
- Top and bottom guide design
- Dual spring design for wide control range

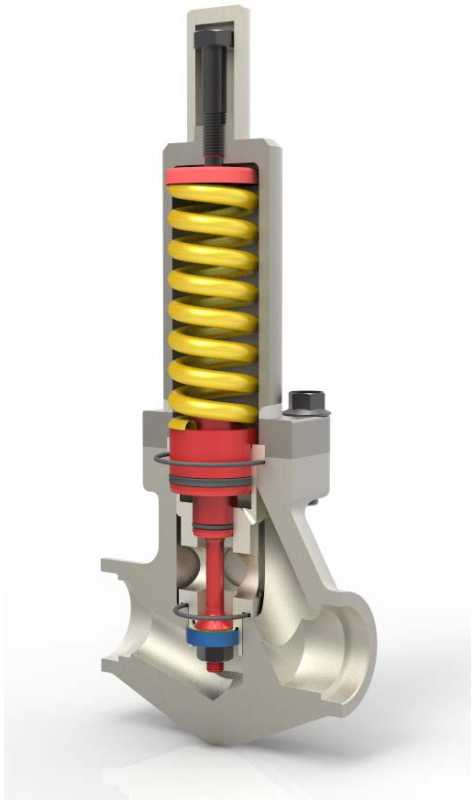

Specifications

Descriptions	Parameters
Maximum Inlet Pressure	350 bar g
Outlet Pressure Range	0.5 ~ 5, 1.5~8, 5~20, 10~80
Size	1/2" ~ 2" (Others-Option)
ANSI Class Rating	150,300,600,900,1500,2500,4500.
End Connection	SW, BW, RF, RTJ
Leakage	Bubble- tight
Maximum Operating Temp.	315'C
Material	Body : A105, F11, F22, F304, F316
	Trim : Stainless Steel, Alloy Steel
	Seal : Buna-N, EPDM, VITON, Kalrez

Dimensions

SIZE	L	H Approx	Cv
1/2″	152	360	1
3/4″	152	360	2
1″	152	360	4
1.5″	172	380	9
2″	203	450	16

- Flanged face to face conform to ISA 75.03

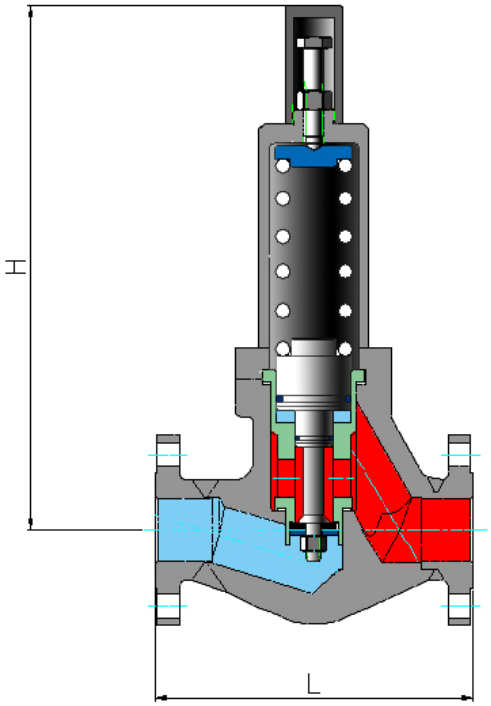

Flow Characteristic

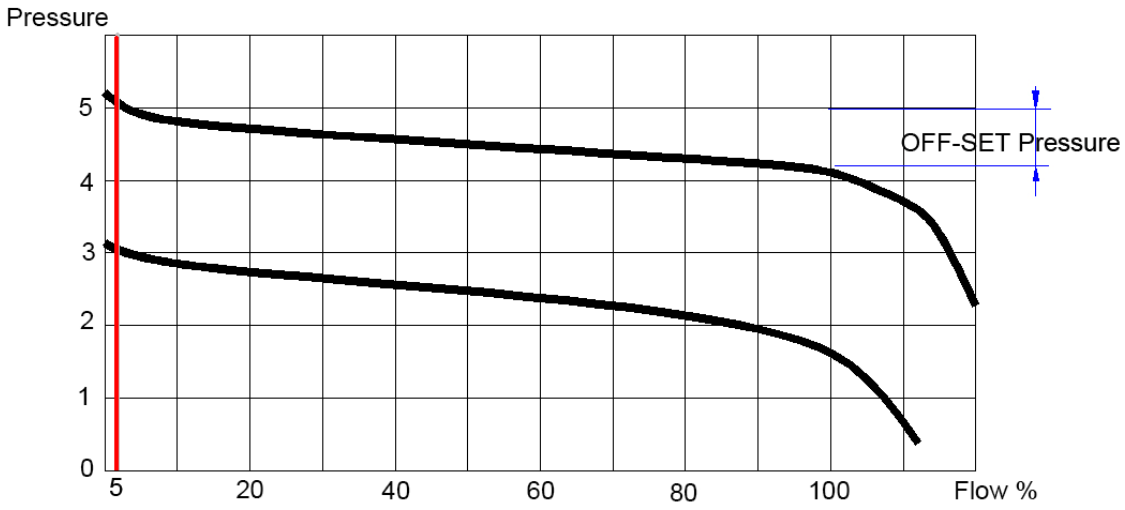

SR-2010 SERIES

PRESSURE REDUCING VALVES / BACK PRESSURE CONTROL VALVES

Feature

- Large capacity cast body design
- Internal sensed compact design
- Piston sensing for high pressure control
- Set pressure ranges field adjustable
- Balanced design for rapid transition service
- Back pressure design available
- Top entry design
- Top and bottom guide design
- Dual spring design for wide control range



Specifications

Descriptions	Parameters
Maximum Inlet Pressure	10, 40, 60, 100, 250 bar g
Outlet Pressure Range	0.5 ~ 5, 1.5~8, 5~20, 10~80
Size	2" ~ 20"
ANSI Class Rating	150,300,600,900,1500,2500.
End Connection	BW,RF,RTJ,Etc.
Leakage	Bubble- tight
Maximum Operating Temp.	315'C
Material	Body : WCB, CF8, CF8M, Alloy, Etc.
	Trim : Stainless Steel, Alloy Steel
	Seal : Buna-N, EPDM, VITON, Kalrez

Dimensions

SIZE	L FLANGE	H Approx	Cv
2″	267	520	16
2.5″″	292	600	25
3″	318	650	36
4″	368	720	64
6″	473	930	144
8″	568	1100	256
10″	708	1400	400
12″	775	1650	576
14″	927	1800	784
16″	1057	2210	1024

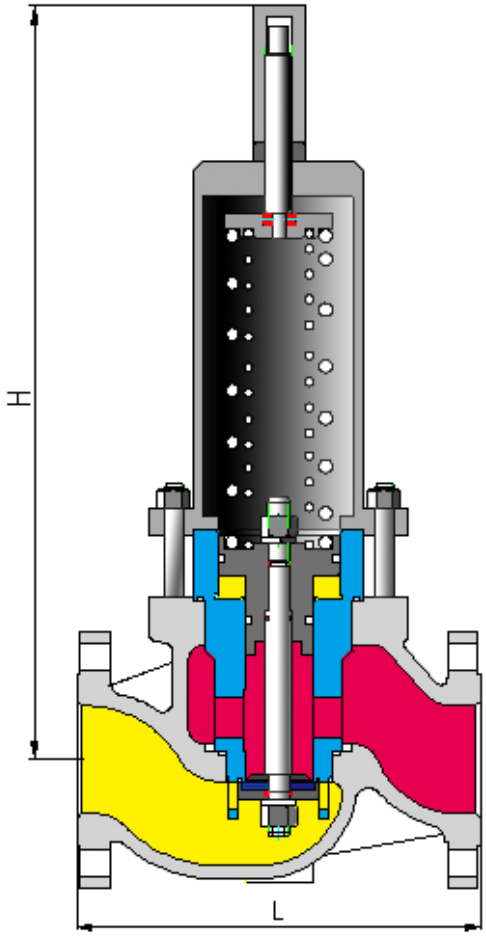

- Face to Face dimensions conform to ISA - 75.03 Table-1.

Flow Characteristic

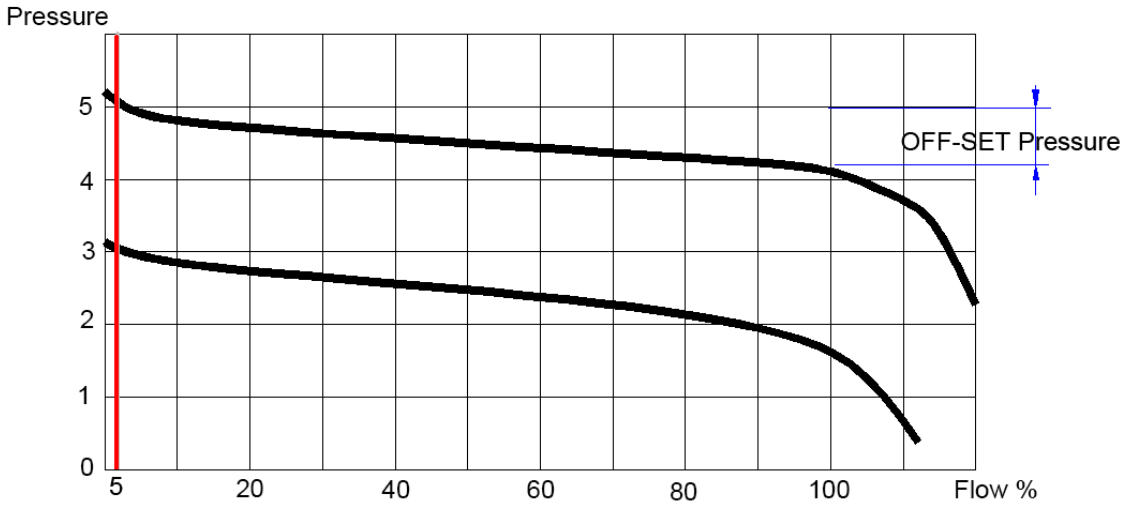

SR-2102 SERIES

LOW PRESSURE REDUCING VALVES / BACK PRESSURE CONTROL VALVES

Feature

- External sensed for precision control
- Diaphragm sensing for sensitive pres. control
- Set pressure ranges field adjustable
- Balanced design for rapid transition service
- Back pressure design available
- Top entry design
- Top and bottom guide design
- External spring design for high capacity (customized design)

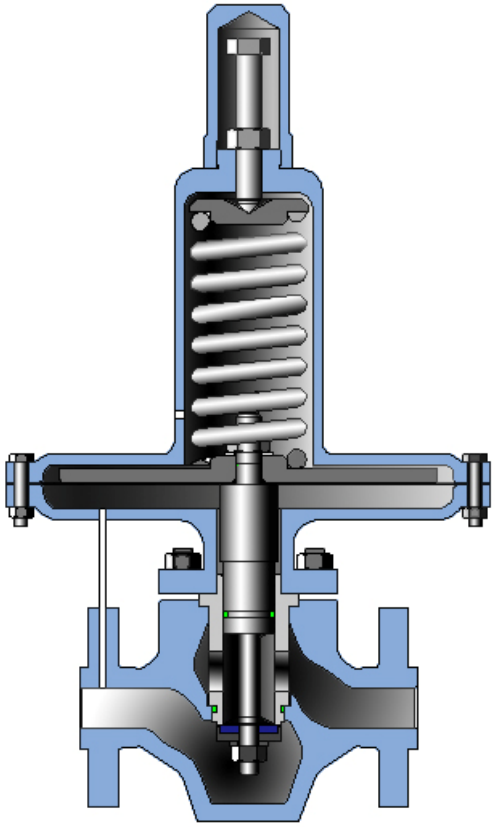

Specifications

Descriptions	Parameters
Maximum Inlet Pressure	100 bar g
Outlet Pressure Range	0.01~0.1, 0.1~1, 0.5 ~ 5
Size	1/2" ~ 4"
Rating	ANSI 150LB,300LB,600LB
End Connection	S.W / B.W / FLANGED
Leakage	Bubble- tight
Maximum Operating Temp.	160'C
Material	Body : A105, WCB, F304, CF8, Alloys
	Trim : Stainless Steel, Alloy Steel
	Seal : Buna-N, EPDM, VITON

Dimensions

SIZE	L	H Approx	Cv
1/2″	152	250	1
3/4″	152	250	2
1″	152	250	4
1.5″	172	310	9
2″	267	380	16
2.5″	292	450	25
3″	318	480	36
4″	368	520	64

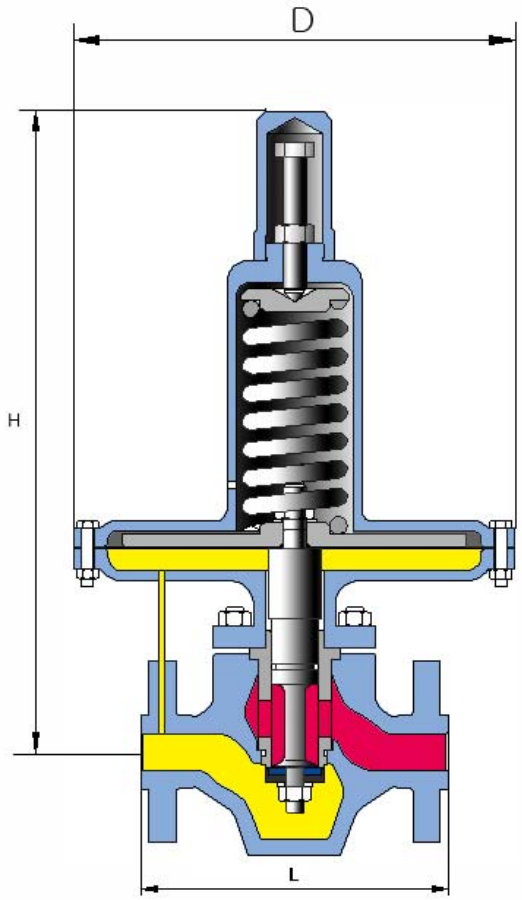

- Flanged face to face conform to ISA 75.03
- Dimensions "D" depend on set pressure range.

Flow Charicteristic

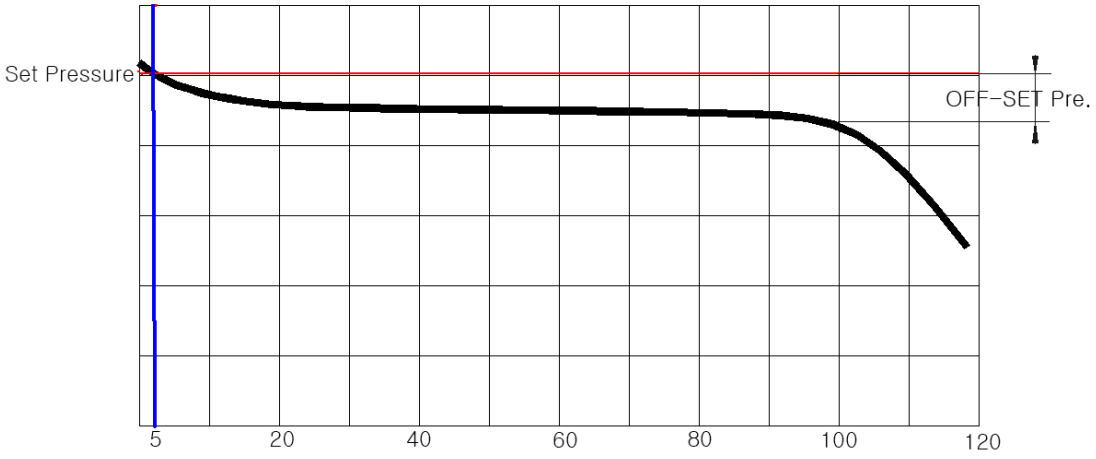

MODELING SYS (REGULATING VALVES)

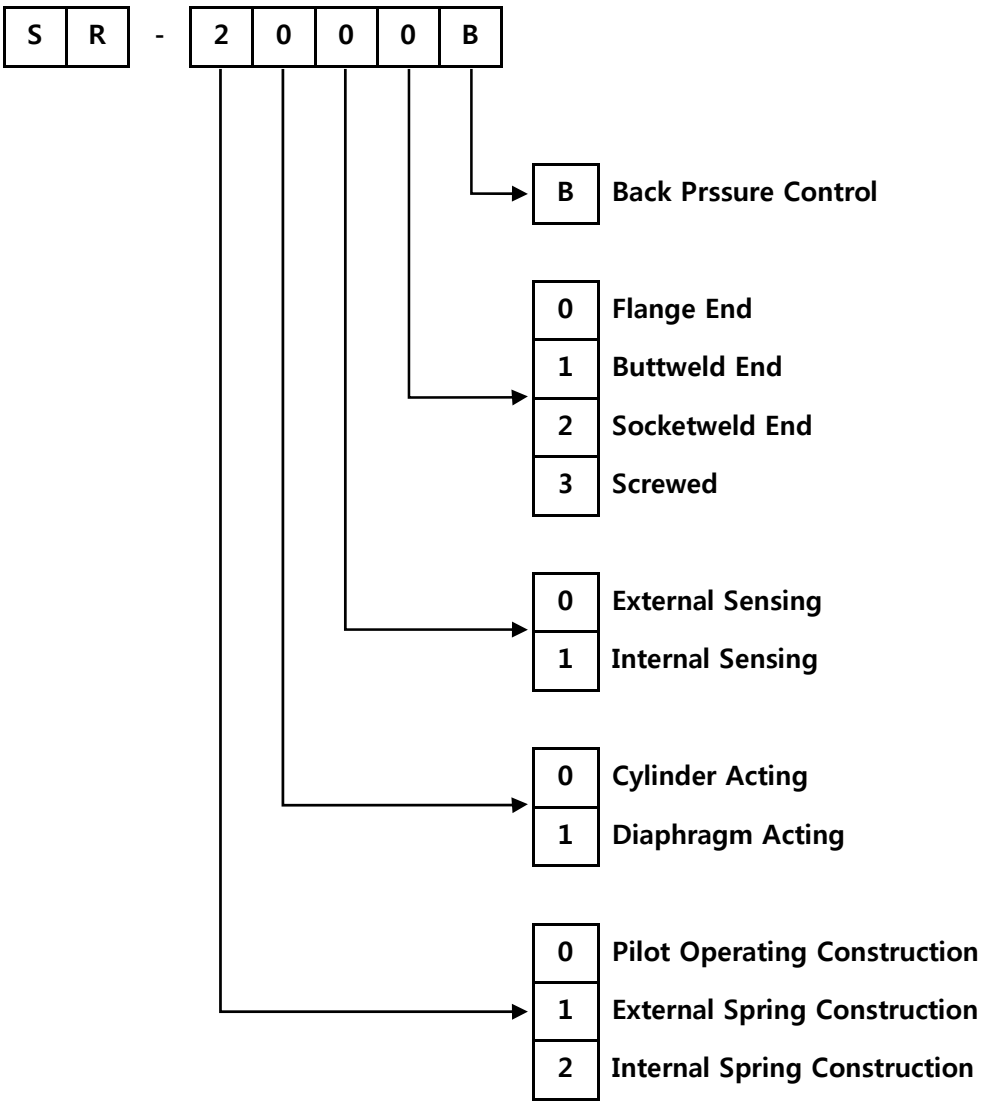

SR Series
Pressure Regulating Valves

www.bfsvalve.com

BFS Incorporation
34-5, Samjeong-dong, Ojeong-gu, Bucheon-City
Geonggi-Do, KOREA
T/+82-32-329-9142. F/+82-32-329-9148
E-mail / bfsvalve@bfsvalve.com