DOOSAN

Optimal Solutions for the Future

BM 2740U





Bridge type machine
with Universal Head

BM 2740U

ver. EN 160502 SU

Chain-type ATC



Tool type	HSK-A63
No. of tools	60 EA
Max. tool weight	8 kg (17.6 lb)
Max. tool diameter (without adjacent tools)	75 (150) mm (3.0 (5.9) inch)
Max. tool length	300 mm (11.8 inch)
Tool change time	5 sec

HEIDENHAIN iTNC530



BM 2740U

Simultaneous 5-Axis Double Column Machining Center for Processing Large Aerospace Parts

Simultaneous 5-axis cutting is supported by a universal head suitable for processing large aerospace parts.
The simultaneous 5-axis performance has been further enhanced by incorporating the HEIDENHAIN CNC system.
The design concept focused on user convenience and work efficiency improves productivity with higher added value.

Universal Head (HeadTec)



Spindle speed	18000 r/min
Power	40 kW (53.6 Hp)
Torque(S1/S6 60%)	100 N·m / 138 N·m (73.8 ft-lbs / 101.8 ft-lbs)
Rotating angle (B/C axis)	±110 / ±220
Tool type	HSK-63A

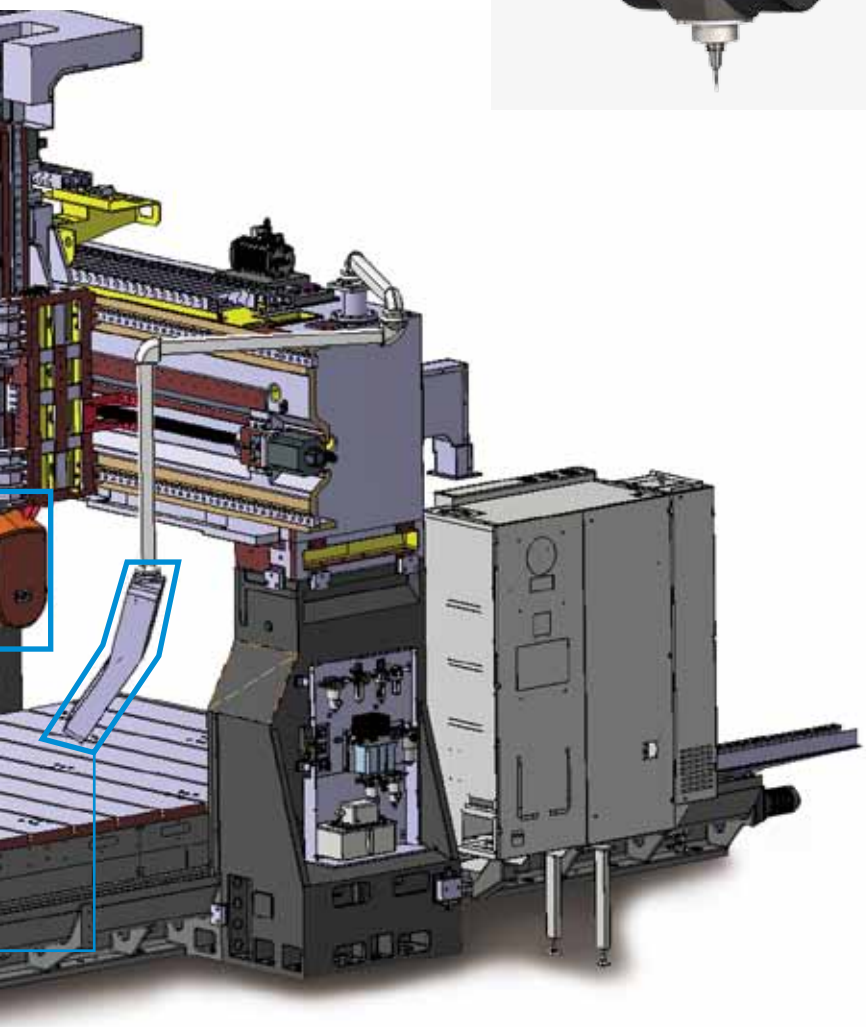

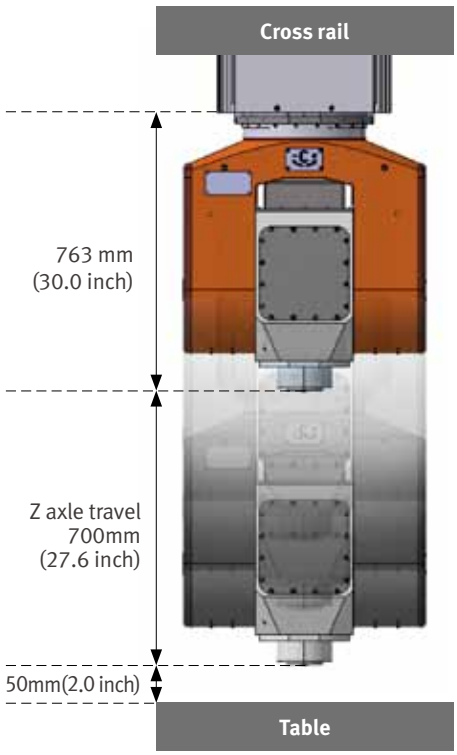

Simultaneous 5-axis cutting realized with a universal head

- 2-axis universal head
- Integrated with the Heidenhain CNC System for high reliability in simultaneous 5-axis machining

Two-face-contact HSK-type spindle suitable for high-speed high-precision cutting

- High speed spindle: HSK-A63 / 18000 rpm

Structure designed for high-precision cutting

- Symmetric double column structure
- Linear scale (X / Y / Z axis)
- Thermal error compensation technology

Main Specifications

BM2740U

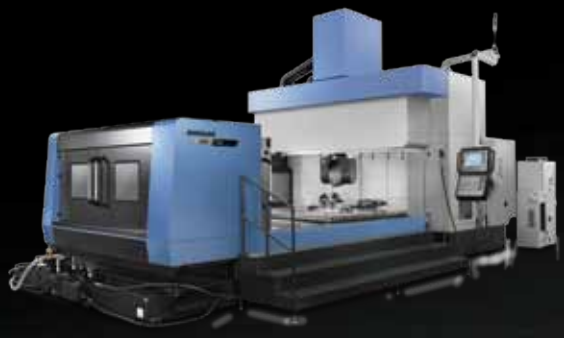

Description	BM 2740U
Travel Distance (X / Y / Z)	4000 mm / 2500 mm / 700 mm (157.5 inch / 98.4 inch / 27.6 inch)
Rapid traverse (X / Y / Z)	12 / 16 / 16 m/min
Spindle speed / taper	18000 r/min / HSK-A63
Spindle power / torque	40 kW / 138 N·m (53.6 Hp / 101.8 ft-lbs)
Table size (X x Y)	4000mm x 2500mm (157.5 inch x 98.4 inch)
Table loading capacity	15000 kg (33068.9 lb)
Tool storage capacity	60 ea
NC System	HEIDENHAIN iTNC530

Standard Feature
Footstep
Spindle head cooling system
Coolant gun
Flood coolant
Air curtain
Ball screw nut cooling system
Coolant tank & chip pan
DAFC (Adaptive Feed Control)
DHC (Doosan Heat Control)
Linear scale (X / Y / Z axis)
Potable MPG
Semi splash guard
60 tools magazine

Optional Feature
Air dryer
Through spindle coolant
Air gun
Automatic tool measurement
Automatic workpiece measurement
Coolant chiller
Full splash guard
LCD 1MPG handle
Lift up chip conveyor & bucket
Oil mist collector
Oil skimmer

DOOSAN

Doosan Machine Tools

http://www.doosanmachinetools.com
www.facebook.com/doosanmachinetools

Optimal Solutions for the Future

Head Office
Yeonkang Bldg., 6th FL., 270, Yeonji-dong, Jongno-gu, Seoul, Korea
Tel +82-2-3670-5345 / 5362
Fax +82-2-3670-5382

Doosan Machine Tools China
Room 101,201,301, Building 39 Xinzhuan Highway No.258 Songjiang District,China Shanghai(201612)
Tel +86 21-5445-1155
Fax +86 21-6405-1472

Doosan Machine Tools Japan
#2412, Mita Kokusai Bldg. 1-4-28 Mita, Minato-ku, Tokyo 108-0073, Japan
Tel +81 3 5730 9013
Fax +81 3 5730 9016

Doosan Machine Tools America
19A Chapin Rd., Pine Brook, NJ 07058, U.S.A.
Tel +1-973-618-2500
Fax +1-973-618-2501

Doosan Machine Tools Europe
Emdener Strasse 24, D-41540 Dormagen, Germany
Tel +49-2133-5067-100
Fax +49-2133-5067-111

Doosan Machine Tools India
106 / 10-11-12, Amruthahalli, Byatarayanapura, Bellary road, Bangalore-560 092, India
Tel +91-80-4266-0122 / 121 / 100

* For more details, please contact Doosan Machine Tools.
* The specifications and information above-mentioned may be changed without prior notice.
* Doosan Machine Tools Co., Ltd. is a subsidiary of MBK Partners. The trademark DOOSAN is used under a licensing agreement with Doosan Corporation, the registered trademark holder.