INNOBIZ 기술혁신형 중소기업
품질, 환경 경영시스템 인증 기업 ISO 9001/2008 ISO 14001/2004
연구개발전담부서

# Oval Gear & Micro Gear Meter



## 기어식 (Gear) 유량계

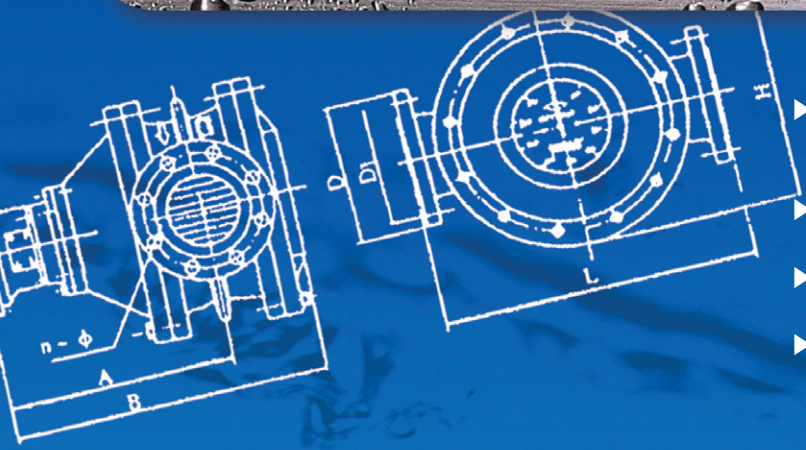


- 유체의 점도 변화에 대하여 영향이 적고 고점도 유체에 있어서도 오차가 적다.
- 작동에 따른 영향이 거의 없다.
- 넓은 범위의 유량계측이 가능하다.
- 주요사용처
  석유화학(원유수임, 출하관리, Tank간 이송 등), 섬유, 제철소, 자동차, 선박(엔진 테스트), 기타 순수처리 장치, 열관리 등 액체용으로 널리 사용

AUTO F·L·O·W
유량계 전문제작/판매
(株) 오토후로

## ▶ 개요 및 특징

Gear type 유량계는 두개의 정교한 타원형 톱니로 구성되어 있고 유체의 압력에 의해서 작동되는 두 톱니는 각각의 회전으로 유량을 정확하게 나타낸다.

두 톱니들의 회전은 Magnetic coupling이 Gear train에 의해 기계상의 계기판으로 전환된다. Gear type 유량계는 극도로 높은 점도(10,000CP) 또 약 200bar 까지의 높은 압력과 고도의 정확도(±0.3~0.5%)를 요하는 유량제어의 목적에 사용된다.

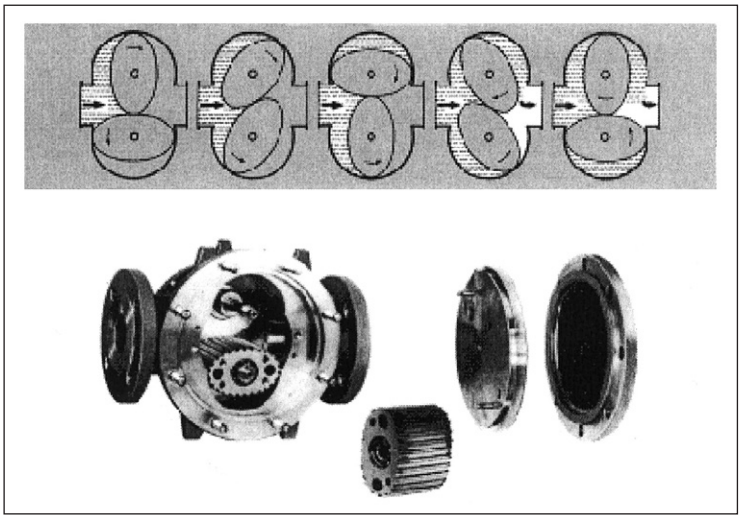

## ▶ TECHNICAL SPECIFICATION

| | |
|---|---|
| Size (크기) | 10A ~ 200A |
| Material (재질) | Casted iron, Stainless steel, Casted steel |
| Process connection (연결방식) | Flange type – JIS 10K RF (Standard)<br>ANSI, DIN (Option) |
| Accuracy (정확도) | ±0.5% of rate / ±0.3% (Option) |
| Fluid Temperature (유체온도) | –20℃ ~ +120℃ / 200℃ (Option) |

## ▶ FLOW RANGE

| Size | Flow Range(㎥/h) | | | |
|---|---|---|---|---|
| | Petpoleum products | | | Chemical liquids |
| | 0.6~2(CP) | 2~8(CP) | 8~200(CP) | 0.6~200(CP) |
| 10A | | 0.08~0.4 | 0.04~0.4 | 0.08~0.4 |
| 15A | | 0.3~1.5 | 0.15~1.5 | 0.3~1.5 |
| 20A | 0.75~3 | 0.4~3 | 0.3~3 | 0.6~3 |
| 25A | 1.5~6 | 0.8~6 | 0.6~6 | 1.2~6.0 |
| 40A | 3~15 | 2~15 | 1.5~15 | 2.4~12 |
| 50A | 4.8~24 | 3~24 | 2.4~24 | 3.8~19 |
| 65A | 8~40 | 5~40 | 4~40 | 8~30 |
| 80A | 12~60 | 8~60 | 6~60 | |
| 100A | 20~100 | 13~100 | 10~100 | |
| 150A | 38~190 | 25~190 | 19~190 | |
| 200A | 68~340 | 45~340 | 34~340 | |

Notes :
1. The flow meter should be selected in accordance with the flow range, but not in accordance with the pipe diameter
2. If the temperature of the metered liquid is between 100–200℃ the max, flow fate must subtract by 10%
3. While metered liquid is not petroleum product, if it visco–sity is equivalent to that listed in the table, the flow range is also equivalent to that listed above.
4. For chemical, high temperature, and high viscosity liquid, consult the factory
5. While the metered media is of strong corrisive, the max. flow must reduce by 1/3.

## ▶ DIMENSION

● 10A~40A

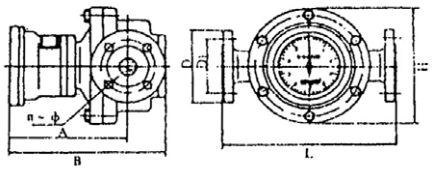

Type LCI 1 (Counter A or A5)

● 50A~100A

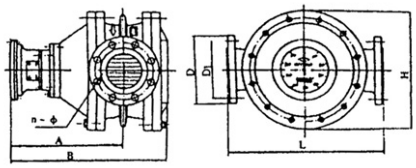

Type LCI 1 (Counter J1)

● 150A~200A

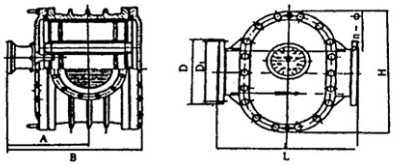

Type LCI 1 (Counter J1)

● A dimensions for coasted iron Oval meter

| DN(mm) | L(mm) | H(mm) | B(mm) | A(mm) | D(mm) | $D_1$(mm) | n(↑)–Φ(mm) |
|---|---|---|---|---|---|---|---|
| 10 | 150 | 100 | 210 | 165 | 90 | 60 | 4 4–14 |
| 15 | 170 | 118 | 226 | 172 | 95 | 65 | 4 4–14 |
| 20 | 200 | 150 | 238 | 225 | 105 | 75 | 4 4–14 |
| 25 | 260 | 180 | 246 | 232 | 115 | 85 | 4 4–14 |
| 40 | 245 | 180 | 271 | 249 | 145 | 110 | 4 4–18 |
| 65 | 420 | 325 | 386 | 270 | 180 | 145 | 4 4–18 |
| 80 | 420 | 325 | 433 | 315 | 195 | 160 | 8 4–18 |
| 100 | 515 | 418 | 458 | 370 | 215 | 180 | 8 4–18 |
| 150 | 540 | 515 | 557 | 347 | 280 | 240 | 8 4–23 |
| 200 | 650 | 650 | 616 | 476 | 335 | 295 | 12 4–23 |

※자세한 Dimension은 본사와 협의 바랍니다.

● E dimensions for coasted steel Oval meter

| DN(mm) | L(mm) | H(mm) | B(mm) | A(mm) | D(mm) | $D_1$(mm) | n(↑)–Φ(mm) |
|---|---|---|---|---|---|---|---|
| 15 | 200 | 138 | 252 | 207 | 105 | 75 | 4 4–14 |
| 20 | 250 | 164 | 220 | 166 | 125 | 90 | 4 4–14 |
| 25 | 300 | 202 | 252 | 190 | 135 | 100 | 4 4–14 |
| 40 | 300 | 202 | 293 | 213 | 165 | 125 | 4 4–18 |
| 50 | 384 | 262 | 394 | 307 | 175 | 135 | 4 4–18 |
| 80 | 450 | 337 | 452 | 334 | 210 | 170 | 8 4–18 |
| 100 | 555 | 442 | 478 | 348 | 250 | 200 | 8 4–18 |
| 150 | 540 | 515 | 557 | 347 | 300 | 250 | 8 4–23 |
| 200 | 650 | 650 | 616 | 369 | 335 | 295 | 12 4–23 |

※자세한 Dimension은 본사와 협의 바랍니다.

## ▶ TYPE OF SIGNAL TRANSMITTER

### • General

QF Signal transmitter is a pulse signal generator added to the Oval flowmeter, which converts the metered media flow into electrical signal, with the structure of two-cable signal, plastic encapsulated, featuring easy operation, long life.

The transmitter has passed the inapection by the national explosion-proof inspection authority, with the explosion-proof certificate number 54025-90.



### • OPERATION PRINCIPAL

The transmitter is composed of a high frequency osillstor, a detector, a pick-up shaping circuit. When a slotted metal chip circulates around the coupled coil between the osillating loop and the detector, it disturbed the magnetic line and the coil gains a series of amplitude signal which is feed into shaping circuit through the pick-up and becomes a square wave.

Due to the voltage lose changes on the load risistance, the current changes, meanwhile, the high and low level turn on the two ends of the transmitter.

### • DESIGN FEATURE

- Two-cable system
- No contact, reliable transmitting
- Square wave output, high performance
- Two explosion-proof types ; intrisically safety, and seperation

### • STRUCTURE

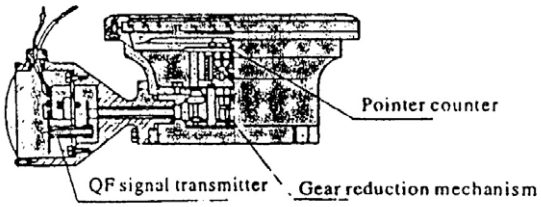


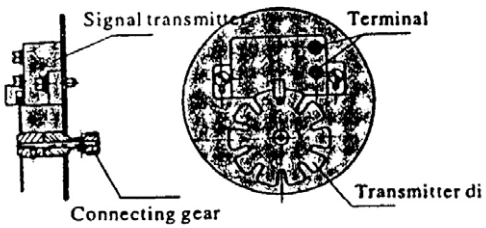


### • TECHNICAL SPECIFICATION

- Operating voltage : DC 12V
- Operating voltage range : DC 11-15V
- Oerating frequency : 200 Hz
- Output signal : low level < 4.5V
  high level > 8.5V(square wave)
- Trnamitting distance : 1 Km (metal shielded cable
  lead resistance ≤ 39Ω
- Environment temp : -10 ~ +65℃
- Explosion-proof mark : a ; iaIICT  b ; dIIBT4

## ▶ Summary

LC-W Series Micro-Flow meter is a new kind of volumetric flow meter, which is designed according to the market and has absorbed foreign most advanced technology. It enjoys advantages of micro flow rate, simple construction, high accuracy, easy operation, and long life. It can adapt to the viscosity of the measured liquid very well and has no requirements on the state and pressure of the measured liquid, so it can measure even if it flows automatically.

The display can indicate total, local, flow rate and has functions of reset, site display and remote transfer, which is especially suitable for the accurate measurement of micro flow of motor fuel, bunker fuel, medicine, industrial chemicals, liquor, milk, vegetable oil, etc.

## ▶ Working Principle

LC-W Series Micro-Flow meter is composed of two parts: flow transducer and display. There is one pair of oval gear in the measurement chamber of transducer, which is taken as measurement unit together with the chamber. The micro-differential pressure between inlet and outlet makes the gear moving and transfers the inlet liquid to the outlet constantly after the measurement in chamber (Refer to the following pictures). At the same time the sensor generates signals accordingly and transfers signals to the display, and then the display indicates the flow rate and total rate after analysis.

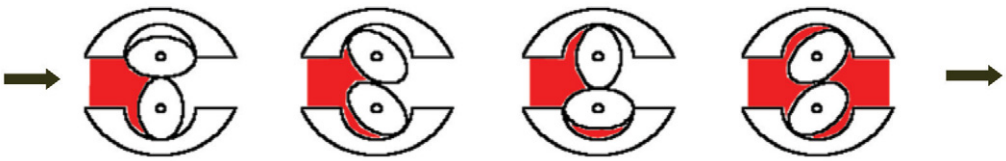

## ▶ Features

1. Small, light, micro flow rate, high accuracy, long life
2. The body is of stainless steel, which can satisfy all kinds of liquid
3. It employs three-wire system (positive power wire, signal wire and power earth-grounded wire); no contact; reliable signal; long-distance transfer; square wave output; allowable working voltage DC12V or 24V.

## ▶ Technical Data

1. Output signal : Square wave pulse. When DC12V, high level>9V, low level<1V; When DC24V, high level>20V, low level<1V;
   4–20mA analog signals (Together with Electric liquid counter)
2. Signal frequency is proportional to its flow rate
3. Transmitting distance : 1Km
4. Ambient temperature : –10 ~ +65℃
5. Pressure : flow automatically, 0.3, 1.0, 2.0MPa
6. Pulse equivalent : 0.0009L/P, 0.0017L/P (In accordance with practical situation)

**If there is any special requirement, please specify separately.**

## ▶ Materials

Shell : Stainless steel

Rotor : Copper, Stainless steel




## ▶ Flow Range

Basic type : 55*55mm Max. Flow 200L/h
Connection: Screwed G1/4
Pulse output, 3–wire system, without display

Site reading : 70*70mm Max. Flow 400L/h
Connection: Screwed G1/2
LED display

## ▶ Installation

- All the pipeline should be clean and install strainer before the meter
- Connect with joint or install as to users' requirements
- In order to repair, by–pass pipeline should be installed and valves should be attached both front and back of the meter

## ▶ Identification

| Model | – | Type | Dia. mm | P MPa | Display | / | Material | Connection | Explanations |
|---|---|---|---|---|---|---|---|---|---|
| L C | | | | | | | | | Oval gear meter |
| | – | | | | | | | | – |
| | | W | | | | | | | Micro type |
| | | | 8 | | | | | | Diameter 8 mm |
| | | | 10 | | | | | | Diameter 10mm |
| | | | | 1.0 | | | | | Pressure 1.0 MPa |
| | | | | | Y | | | | Remote display (With display) |
| | | | | | X | | | | Site display (Output 4–20mA) |
| | | | | | | / | | | / |
| | | | | | | | B | | Shell, Rotor : SS |
| | | | | | | | C | | Shell : SS ; Rotor : Copper |
| | | | | | | | | G | Screw Connection |
| | | | | | | | | J | Joint Connection |



(Screw 형식)



(Flagne 형식)
Site Display Type

## ■ 취급품목

- 면적식 유량계
- 볼텍스 유량계
- 터빈 유량계
- 판넬취부용 유량계
- 금속튜브형 유량계
- 오발기어식(용적식) 유량계
- 오리피스 유량계
- 기타 유량계
- 질량 유량계
- 전자 유량계
- 유량 감시계
- Mass 유량계



# FLOWMETERS

# A • U • T • O • F • L • O • W

★ 본 카다로그에 기재된 사양, 외형, 치수는 제품 개발을 위하여 변경 될 수 있습니다.


AUTO F·L·O·W 유량계 전문제작/판매 (株) 오토후로

서울특별시 구로구 구로동 170-13번지 벽산디지털밸리 7차 707호
TEL:(02)2691-7552 / 2614-9464 FAX:(02)2613-9463
http://www.autoflow.co.kr E-mail :autoflow@autoflow.co.kr


Ver. 2012. 05