Ezi-SPEED®

BLDC Motor Speed Control System

- AC input **BLDC motor speed control** system
- Wide speed control range **(50~4000rpm)**
- **Stable speed control** by Vector control
  (Speed regulation 0.2%)
- A stable **row speed (50rpm)** by Velocity Observer
- Product line-up : **30, 60, 120, 200, 400W**
- **Energy-saving** by Low heat
- Easy speed control, Easy wiring and connecting
  (Front Panel and I/O)



CE

FASTECH
Fast, Accurate, Smooth Motion

1 Stable Speed Control (Speed Regulation 0.2%)

Ezi-SPEED compare the setting speed with the speed feedback signals from the motor at all time, and adjusts the motor's applied current. So, even if the load changes, stable rotation is performed from low speed to high speed. Inverter controlled AC induction motor do not perform feed-back signals, so the speed will reduce significantly when load increases.
Ezi-SPEED is recommended for application that require speed stable.

* Load factor : 95% * Setting speed : 1,500[rpm]
* Speed regulation measuring with encoder : 32,000[ppr]

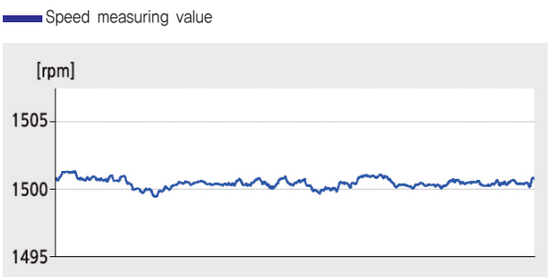

Ezi-SPEED 120W

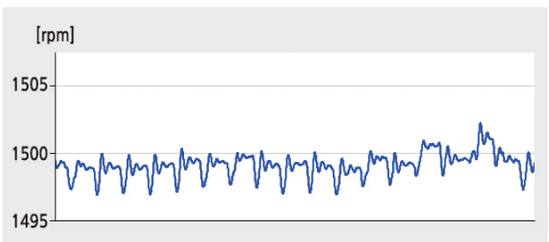

Inverter + AC induction motor 100W

2 Wide speed control range (Speed Ratio : 1:80)

Ezi-SPEED has a broader speed control range compared AC speed control motor and inverter. And the torque is not restricted at low speed, Ezi-SPEED is recommended for application that require torque stable.

Speed range of Ezi-SPEED : 50~4000rpm
Speed range of Inverter + AC induction motor : 200~2400rpm

* Speed range of Inverter + AC induction motor is depends on models.

Product	Speed Control Range	Speed Ratio
Ezi-SPEED	50~4000rpm	1:80
I nverter + AC induction motor	200~2400rpm	1:12

3 High Efficiency (Energy Savings)

Brushless motors used permanent magnets in the rotor. It is prevent little secondary loss from rotor.
Therefore, BLDC motor is more high efficiency than inverter controlled AC induction motor.
So customer can save energy.

- Load factor : 100%, Setting speed : 1500rpm
- Comparison of motor temperature after 4 hours continuous operation.

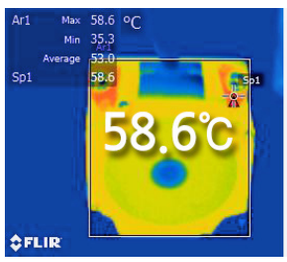

Ezi-SPEED 60W

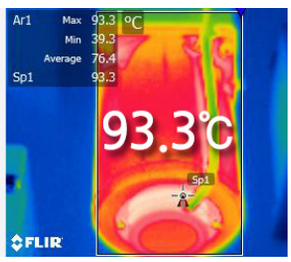

AC Induction Motor 60W

4 Compact, Light weight, High power (Compared to AC induction motor)

BLDC motor have compact design, light weight and provide high power by the permanent magnets being used in the rotor. So BLDC motor can power-up compared to AC in-duction motor.



Ezi-SPEED 60W



AC Induction Motor 60W

5 Easy wiring

The motor connector and sensor connector can be easily connected to drive. Also there is no need for soldering or special tools when connecting the power and I/O con-nectors. just insert the lead wire to power connector and use driver also just insert the lead wire while pushing the orange button of I/O connector.



Motor Connector Wiring

6 Easy Use (Front Panel)



• Control of Operation and Stop

The motor starts when switch is set to the "RUN" position, it set to the "STAND-BY" position, the motor decelerates to a stop. The motor can be operated with only one switch.



• Control of rotation direction

Changing the rotation direction is possible with the rotation direction switch. It is possible to change the motor direction even when this motor is in operation.



• Control of Speed

The speed control buttons allow you to use simple speed control and many functions. Pushing + button increases the speed and pushing − button reduces the speed. When the desired speed is reached, simply push the S button to set the speed value.

7 Operation by External I/O (ex. PLC, I/F etc)

Ezi-SPEED is possible Start/Stop, Changing the rotation direction and Multi speed operation by external I/O.



I/O operation



Ezi-SPEED PLC

8 Display Load factor and actual speed

With the rated torque of the motor at 100%, the load factor can be expressed as a percentage. Users can check load factor during use of application. So it is possible to keep the application in optimum condition because the load can be changed by aging.
The actual speed of motor can be display. (Motor Speed, Gearhead speed, Linear speed)



Indication at load factor of 100%



Actual speed at setting speed of 1500rpm

9 8-Speed settings

Operation is possible by setting the data to operating data No.0~No.7, and switching the input of the P0, P1 and P2 inputs. 8-Speed operations is possible only with Ezi-SPEED without a separate control device.

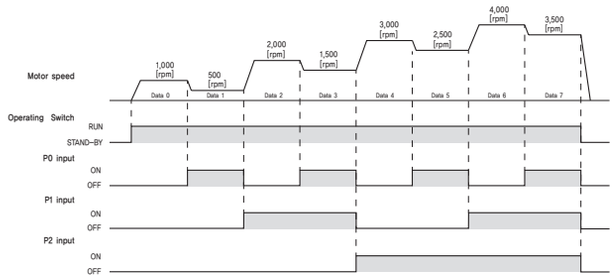

10 Various functions can be set on the drive

- Motor Start / Stop
- Setting the operation speed
- Changing the rotation direction
- Changing the indication
- Operation speed indication when the speed reduction/speed increasing ration is set
- Setting the acceleration/deceleration time
- Button operation lock
- Speed setting for 8-speed operation
- Speed limits setting
- Validating the external operation signals
- External input/output signal allocation
- Setting the overload alarm detection time

11 Lock the setting and operation

• Ezi-SPEED provides a lock function to prevents the undesired changes in the speed and the changes or deletion of data with operation of the button.

• Setting the lock function
Press the S button for 5 seconds or more when "STAND-BY" mode.
When "LOCK" appears, the lock function is activated.

• Cancelling the lock function
Press the S button for 5 seconds or more.
When "UnLK" appears, the lock function has been cancelled.

12 Protective function

• Ezi-SPEED has the ability to detect abnormal condition like overload, over voltage etc. If abnormality is detected, the operation is stopped and an alarm is indicated.

• A regenerative resistor can be used when the deceleration time is short or when the large inertia is driven by providing a regenerative resistor contact terminal. Also the protection function has been strengthened for the external force acting on the motor shaft.

Ezi-SPEED Part Numbering

Ezi-SPEED-60-S-30-C-R5-P

Drive Series

Motor Size

60 : 61*61mm
80 : 81*81mm
90 : 90*90mm
104 : 104.5*104.5mm

Gearhead Size

60 : 60*60mm
80 : 80*80mm
90 : 90*90mm
104 : 110*110mm

Hollow Shaft Gearhead Size

60 : 60*120.5mm
80 : 80*160.5mm
90 : 90*160mm
104 : Not applicable

Shaft Figuration

S : Straight
H : High Strength

Output Power(W)

30 : 30W
60 : 60W
120 : 120W
200 : 200W
400 : 400W

Power Supply Voltage

C : Single-Phase,
Three-Phase 200~240V

Gear Ratio

No Indication : No
R5 – 1/5
R10 – 1/10
R15 – 1/15
R20 – 1/20
R30 – 1/30
R50 – 1/50
R100 – 1/100
R200 – 1/200

Gearhead Figuration

No Indication : No
P : Parallel Gearhead
H : Hollow Flat Gearhead

Standard Motor and Drive Combinations

Output Power	Unit Part Number	Motor Part Number	Drive Part Number
30W	Ezi-SPEED-60-S-30-C	ESM-60-S-30	ESD-30-C
60W	Ezi-SPEED-80-S-60-C	ESM-80-S-60	ESD-60-C
120W	Ezi-SPEED-90-S-120-C	ESM-90-S-120	ESD-120-C
200W	Ezi-SPEED-104-S-200-C	ESM-104-S-200	ESD-200-C
400W	Ezi-SPEED-104-S-400-C	ESM-104-S-400	ESD-400-C

Gearhead Mounted Motor and Drive Combinations

Out-put Power	Unit Part Number	Motor Part Number	Drive Part Number	Gearhead Part number	Gear Ratio
30W	Ezi-SPEED-60-H-30-C-R5-P	ESM-60-H-30	ESD-30-C	ESG-60-H-R5-P	1:5
	Ezi-SPEED-60-H-30-C-R5-H			ESG-60-H-R5-H	
	Ezi-SPEED-60-H-30-C-R10-P			ESG-60-H-R10-P	1:10
	Ezi-SPEED-60-H-30-C-R10-H			ESG-60-H-R10-H	
	Ezi-SPEED-60-H-30-C-R15-P			ESG-60-H-R15-P	1:15
	Ezi-SPEED-60-H-30-C-R15-H			ESG-60-H-R15-H	
	Ezi-SPEED-60-H-30-C-R20-P			ESG-60-H-R20-P	1:20
	Ezi-SPEED-60-H-30-C-R20-H			ESG-60-H-R20-H	
	Ezi-SPEED-60-H-30-C-R30-P			ESG-60-H-R30-P	1:30
	Ezi-SPEED-60-H-30-C-R30-H			ESG-60-H-R30-H	
	Ezi-SPEED-60-H-30-C-R50-P			ESG-60-H-R50-P	1:50
	Ezi-SPEED-60-H-30-C-R50-H			ESG-60-H-R50-H	
	Ezi-SPEED-60-H-30-C-R100-P			ESG-60-H-R100-P	1:100
	Ezi-SPEED-60-H-30-C-R100-H			ESG-60-H-R100-H	
	Ezi-SPEED-60-H-30-C-R200-P			ESG-60-H-R200-P	1:200
	Ezi-SPEED-60-H-30-C-R200-H			ESG-60-H-R200-H	
60W	Ezi-SPEED-80-H-60-C-R5-P	ESM-80-H-60	ESD-60-C	ESG-80-H-R5-P	1:5
	Ezi-SPEED-80-H-60-C-R5-H			ESG-80-H-R5-H	
	Ezi-SPEED-80-H-60-C-R10-P			ESG-80-H-R10-P	1:10
	Ezi-SPEED-80-H-60-C-R10-H			ESG-80-H-R10-H	
	Ezi-SPEED-80-H-60-C-R15-P			ESG-80-H-R15-P	1:15
	Ezi-SPEED-80-H-60-C-R15-H			ESG-80-H-R15-H	
	Ezi-SPEED-80-H-60-C-R20-P			ESG-80-H-R20-P	1:20
	Ezi-SPEED-80-H-60-C-R20-H			ESG-80-H-R20-H	
	Ezi-SPEED-80-H-60-C-R30-P			ESG-80-H-R30-P	1:30
	Ezi-SPEED-80-H-60-C-R30-H			ESG-80-H-R30-H	
	Ezi-SPEED-80-H-60-C-R50-P			ESG-80-H-R50-P	1:50
	Ezi-SPEED-80-H-60-C-R50-H			ESG-80-H-R50-H	
	Ezi-SPEED-80-H-60-C-R100-P			ESG-80-H-R100-P	1:100
	Ezi-SPEED-80-H-60-C-R100-H			ESG-80-H-R100-H	
	Ezi-SPEED-80-H-60-C-R200-P			ESG-80-H-R200-P	1:200
	Ezi-SPEED-80-H-60-C-R200-H			ESG-80-H-R200-H	
120W	Ezi-SPEED-90-H-120-C-R5-P	ESM-90-H-120	ESD-120-C	ESG-90-H-R5-P	1:5
	Ezi-SPEED-90-H-120-C-R5-H			ESG-90-H-R5-H	
	Ezi-SPEED-90-H-120-C-R10-P			ESG-90-H-R10-P	1:10
	Ezi-SPEED-90-H-120-C-R10-H			ESG-90-H-R10-H	
	Ezi-SPEED-90-H-120-C-R15-P			ESG-90-H-R15-P	1:15
	Ezi-SPEED-90-H-120-C-R15-H			ESG-90-H-R15-H	
	Ezi-SPEED-90-H-120-C-R20-P			ESG-90-H-R20-P	1:20
	Ezi-SPEED-90-H-120-C-R20-H			ESG-90-H-R20-H	
	Ezi-SPEED-90-H-120-C-R30-P			ESG-90-H-R30-P	1:30
	Ezi-SPEED-90-H-120-C-R30-H			ESG-90-H-R30-H	
	Ezi-SPEED-90-H-120-C-R50-P			ESG-90-H-R50-P	1:50
	Ezi-SPEED-90-H-120-C-R50-H			ESG-90-H-R50-H	
	Ezi-SPEED-90-H-120-C-R100-P			ESG-90-H-R100-P	1:100
	Ezi-SPEED-90-H-120-C-R100-H			ESG-90-H-R100-H	
	Ezi-SPEED-90-H-120-C-R200-P			ESG-90-H-R200-P	1:200
	Ezi-SPEED-90-H-120-C-R200-H			ESG-90-H-R200-H	

● Gearhead Mounted Motor and Drive Combinations

Out-put Power	Unit Part Number	Motor Part Number	Drive Part Number	Gearhead Part number	Gear Ratio
200W	Ezi-SPEED-104-H-200-C-R5-P	ESM-104-H-200	ESD-200-C	ESG-104-H-R5-P	1:5
	Ezi-SPEED-104-H-200-C-R10-P			ESG-104-H-R10-P	1:10
	Ezi-SPEED-104-H-200-C-R15-P			ESG-104-H-R15-P	1:15
	Ezi-SPEED-104-H-200-C-R20-P			ESG-104-H-R20-P	1:20
	Ezi-SPEED-104-H-200-C-R30-P			ESG-104-H-R30-P	1:30
	Ezi-SPEED-104-H-200-C-R50-P			ESG-104-H-R50-P	1:50
	Ezi-SPEED-104-H-200-C-R100-P			ESG-104-H-R100-P	1:100
	Ezi-SPEED-104-H-200-C-R200-P			ESG-104-H-R200-P	1:200
400W	Ezi-SPEED-104-H-400-C-R5-P	ESM-104-H-400	ESD-400-C	ESG-104-H-R5-P	1:5
	Ezi-SPEED-104-H-400-C-R10-P			ESG-104-H-R10-P	1:10
	Ezi-SPEED-104-H-400-C-R15-P			ESG-104-H-R15-P	1:15
	Ezi-SPEED-104-H-400-C-R20-P			ESG-104-H-R20-P	1:20
	Ezi-SPEED-104-H-400-C-R30-P			ESG-104-H-R30-P	1:30
	Ezi-SPEED-104-H-400-C-R50-P			ESG-104-H-R50-P	1:50
	Ezi-SPEED-104-H-400-C-R100-P			ESG-104-H-R100-P	1:100
	Ezi-SPEED-104-H-400-C-R200-P			ESG-104-H-R200-P	1:200

● Drive Specification and Size

1. Functions

Unit Part Number		ESD-30-C	ESD-60-C	ESD-120-C	ESD-200-C	ESD-400-C
Rated Output Power(Continuous)		30W	60W	120W	200W	400W
Power Supply Input	Rated Voltage	Single-Phase 200~240V / Three-Phase 200~240V				
	Permissible Voltage Range	-10 ~ 10 %				
	Frequency	50 / 60 Hz				
	Permissible Frequency Range	±5 %				
	Rated Input Current	Single-Phase : 0.88 A Three-Phase : 0.51 A	Single-Phase : 1.55 A Three-Phase : 0.90 A	Single-Phase : 2.43 A Three-Phase : 1.41 A	Single-Phase : 3.42 A Three-Phase : 1.97 A	Single-Phase : 5.64 A Three-Phase : 3.26 A
	Maximum Input Current	Single-Phase : 1.9 A Three-Phase : 1.1 A	Single-Phase : 2.8 A Three-Phase : 1.7 A	Single-Phase : 4.5 A Three-Phase : 2.6 A	Single-Phase : 5.47 A Three-Phase : 3.16 A	Single-Phase : 7.85 A Three-Phase : 4.53 A
Rated Output Current		0.17 A	0.43 A	0.89 A	1.60 A	2.31 A
Rated Torque		0.096 N·m	0.191 N·m	0.382 N·m	0.637 N·m	1.27 N·m
Maximum instantaneous Torque		0.144 N·m	0.287 N·m	0.573 N·m	1.15 N·m	1.91 N·m
Rated Speed		3000 r/min				
Speed Control Range		50~4000 r/min				
Speed Regulation		0.2% or less / Conditions : 0~ Rated Torque, Rated Speed, Rated Voltage, no load normal Temperature				
Environment	Temperature	Operating : 0 ~ 40 °C Storage : -20 ~ 70 °C				
	Humidity	Operating : 35 ~ 85%RH (Non-condensing) Storage : 10 ~ 90%RH (Non-condensing)				
	Vibration resistant	0.5 G				
Input / Output Signal	Input Signal Functions	5 user inputs (Photocoupler)				
	Output Signal Functions	3 user outputs (Photocoupler)				

● Drive Size[mm]

1. 30, 60, 120w Drive

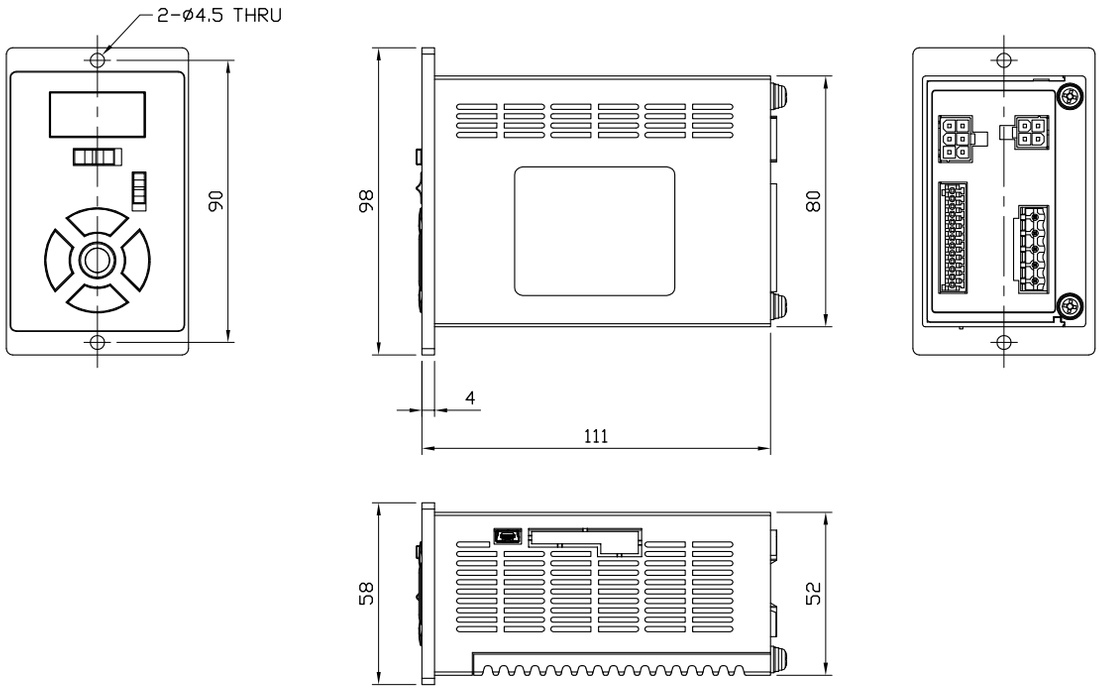

2. 200, 400w Drive

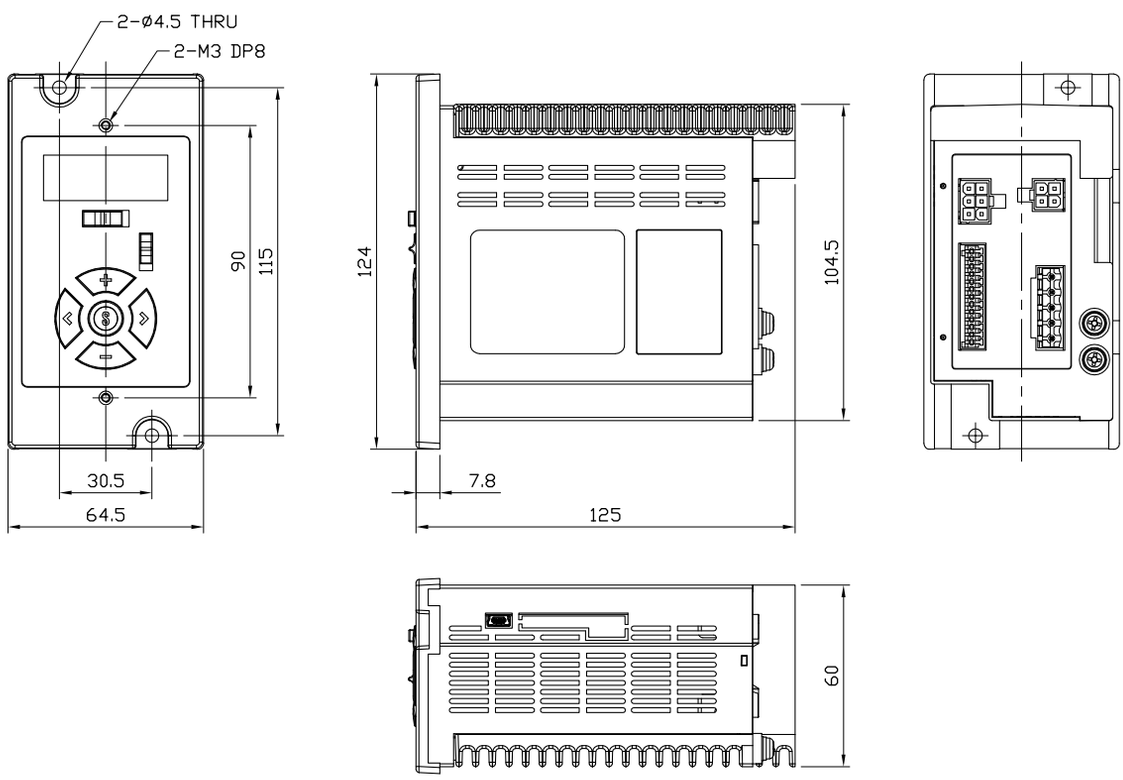

Standard Motor Specification and Size

1. Motor Specifications

Motor	Unit	ESM-60-H-30	ESM-80-H-60	ESM-90-H-120	ESM-104-H-200	ESM-104-H-400
Rated Output Power(Continuous)	W	30	60	120	200	400
Rated Torque	N · m	0.096	0.191	0.382	0.637	1.27
Rated Output Current	A	0.17	0.43	0.89	1.65	2.57
Rated Speed	r/min	3000				
Permissible load inertia moment	10^{-4}kg · m^2	0.5	1.8	5.8	5.8	8.75
Inertia Moment	10^{-4}kg · m^2	0.086	0.234	0.61	0.61	0.66
Phase Resistance	Ω	44	16	3.6	3.6	2.3
Phase Back EMF Constant	mV/min	22.2	24.8	19	30	23
Torque Constant	N · m/Arms	0.26	0.34	0.23	0.26	0.65
Weight	Kg	0.5	0.8	1.3	2.4	2.4
Length	mm	62	74	94	156	156
Permissible Overhung Load	10mm from Shaft end[N]	70	120	160	160	160
	20mm from Shaft end[N]	100	140	170	170	170

2. Torque Characteristics

Ezi-SPEED_ 30W

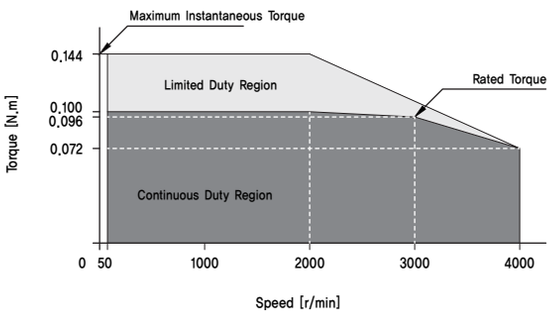

Ezi-SPEED_ 60W

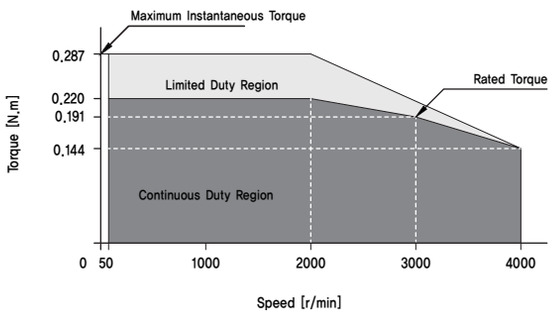

Ezi-SPEED_ 120W

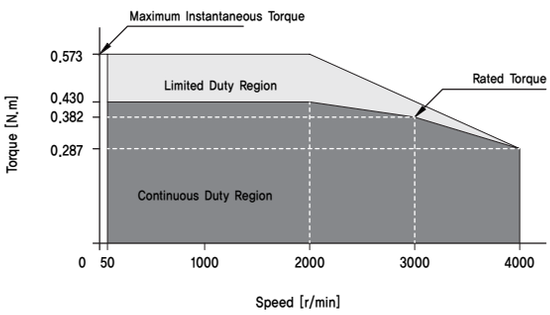

Ezi-SPEED_ 200W

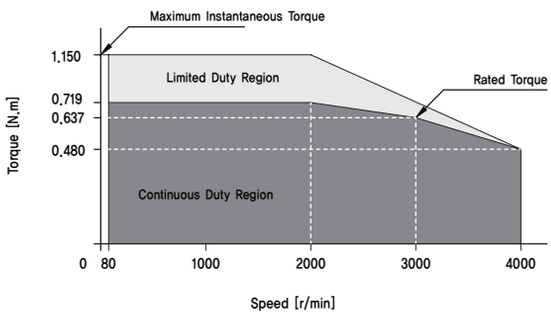

Ezi-SPEED_ 400W

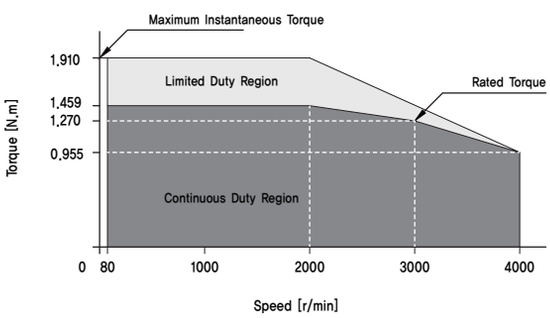

● Standard Motor Specification and Size

3. Motor Size(mm)

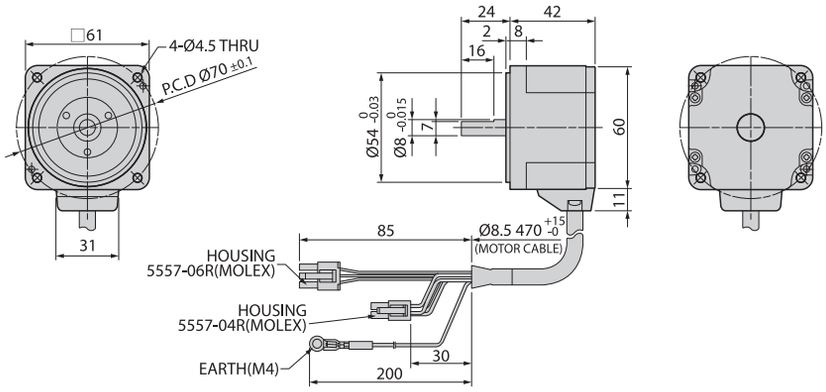

30W
ESM-60-S-30

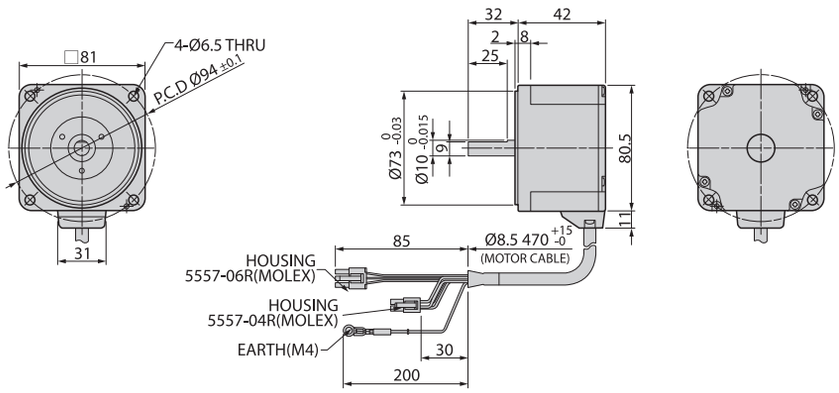

60W
ESM-80-S-60

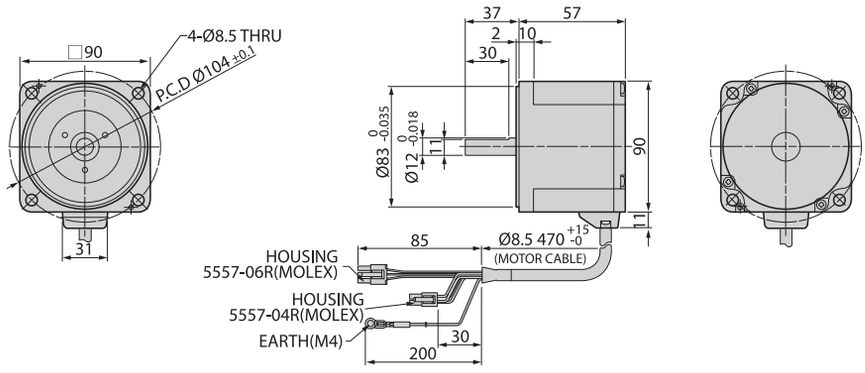

120W
ESM-90-S-120

4. Motor Size(mm)

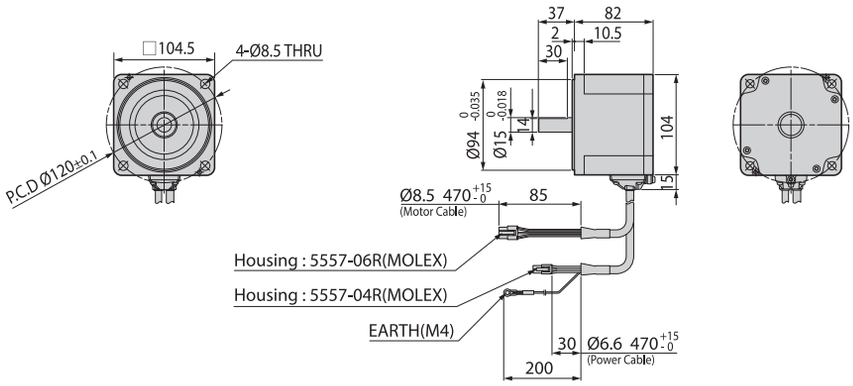

200W
ESM-104-S-200

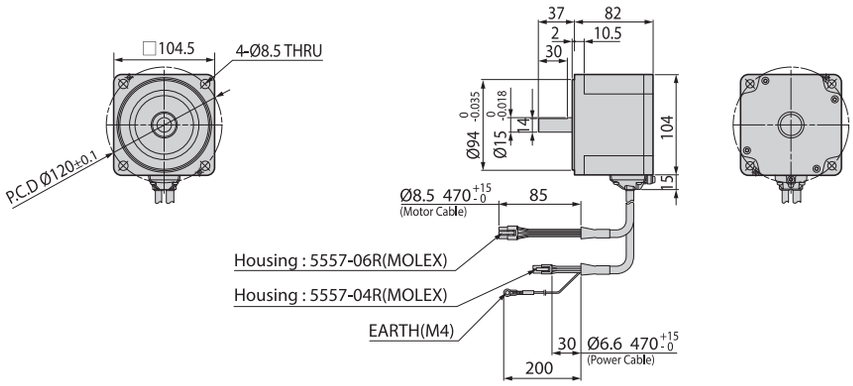

400W
ESM-104-S-400

● Gearhead Mounted Motor Specifications and Size

1. Parallel Shaft Gearhead mounted Motor Specification

• 30W

Part Number	Gear Ratio	Permissible Torque (N · m)		Permissible Speed Range (rpm)	Unit Weight (Kg)	Permissible Overhung		Permissible Thrust Load (N)
		100~3000 r/min	4000 r/min			10mm from shaft end	20mm from shaft end	
ESM-60-H-30+ESG-60-H-R5-P	5	0.45	0.34	20~400	0.9	100	150	40
ESM-60-H-30+ESG-60-H-R10-P	10	0.9	0.68	10~200		150	200	
ESM-60-H-30+ESG-60-H-R15-P	15	1.35	1	6.7~133				
ESM-60-H-30+ESG-60-H-R20-P	20	1.8	1.4	5~100				
ESM-60-H-30+ESG-60-H-R30-P	30	2.6	1.9	3.3~67		200	300	
ESM-60-H-30+ESG-60-H-R50-P	50	4.3	3.2	2~40				
ESM-60-H-30+ESG-60-H-R100-P	100	6	5.4	1~20				
ESM-60-H-30+ESG-60-H-R200-P	200	6	5.4	0.5~10				

• 60W

Part Number	Gear Ratio	Permissible Torque (N · m)		Permissible Speed Range (rpm)	Unit Weight (Kg)	Permissible Overhung		Permissible Thrust Load (N)
		100~3000 r/min	4000 r/min			10mm from shaft end	20mm from shaft end	
ESM-80-H-60+ESG-80-H-R5-P	5	0.9	0.68	20~400	1.6	200	250	100
ESM-80-H-60+ESG-80-H-R10-P	10	1.8	1.4	10~200		300	350	
ESM-80-H-60+ESG-80-H-R15-P	15	2.7	2	6.7~133				
ESM-80-H-60+ESG-80-H-R20-P	20	3.6	2.7	5~100				
ESM-80-H-60+ESG-80-H-R30-P	30	5.2	3.9	3.3~67		150	550	
ESM-80-H-60+ESG-80-H-R50-P	50	8.6	6.5	2~40				
ESM-80-H-60+ESG-80-H-R100-P	100	16	12.9	1~20				
ESM-80-H-60+ESG-80-H-R200-P	200	16	14	0.5~10				

• 120W

Part Number	Gear Ratio	Permissible Torque (N · m)		Permissible Speed Range (rpm)	Unit Weight (Kg)	허용 Overhang		Permissible Thrust Load (N)
		100~3000 r/min	4000 r/min			10mm from shaft end	20mm from shaft end	
ESM-90-H-120+ESG-90-H-R5-P	5	1.8	1.4	20~400	2.7	300	400	150
ESM-90-H-120+ESG-90-H-R10-P	10	3.6	2.7	10~200		400	500	
ESM-90-H-120+ESG-90-H-R15-P	15	5.4	4.1	6.7~133				
ESM-90-H-120+ESG-90-H-R20-P	20	7.2	5.4	5~100				
ESM-90-H-120+ESG-90-H-R30-P	30	10.3	7.7	3.3~67		500	650	
ESM-90-H-120+ESG-90-H-R50-P	50	17.2	12.9	2~40				
ESM-90-H-120+ESG-90-H-R100-P	100	30	25.8	1~20				
ESM-90-H-120+ESG-90-H-R200-P	200	30	27	0.5~10				

● Gearhead Mounted Motor Specifications and Size

2. Parallel Shaft Gearhead mounted Motor Specification

• 200W

Part Number	Gear Ratio	Permissible Torque (N · m)		Permissible Speed Range (rpm)	Unit Weight (Kg)	Permissible Overhung		Permissible Thrust Load (N)
		100~3000 r/min	4000 r/min			10mm from shaft end	20mm from shaft end	
ESM-104-H-200+ESG-104-H-R5-P	5	2.9	2	20~400	4.2	300	400	150
ESM-104-H-200+ESG-104-H-R10-P	10	5.9	4.1	10~200		400	500	
ESM-104-H-200+ESG-104-H-R15-P	15	8.8	6.1	6.7~133				
ESM-104-H-200+ESG-104-H-R20-P	20	11.7	8.1	5~100				
ESM-104-H-200+ESG-104-H-R30-P	30	16.8	11.6	3.3~67		500	650	
ESM-104-H-200+ESG-104-H-R50-P	50	28	19.4	2~40				
ESM-104-H-200+ESG-104-H-R100-P	100	52.7	36.5	1~20				
ESM-104-H-200+ESG-104-H-R200-P	200	70	63	0.5~10				

• 400W

Part Number	Gear Ratio	Permissible Torque (N · m)		Permissible Speed Range (rpm)	Unit Weight (Kg)	Permissible Overhung		Permissible Thrust Load (N)
		100~3000 r/min	4000 r/min			10mm from shaft end	20mm from shaft end	
ESM-104-H-400+ESG-104-H-R5-P	5	5.9	4.3	20~400	4.2	300	400	150
ESM-104-H-400+ESG-104-H-R10-P	10	11.7	8.6	10~200		400	500	
ESM-104-H-400+ESG-104-H-R15-P	15	17.6	12.8	6.7~133				
ESM-104-H-400+ESG-104-H-R20-P	20	23.4	17.1	5~100				
ESM-104-H-400+ESG-104-H-R30-P	30	33.5	24.5	3.3~67		500	650	
ESM-104-H-400+ESG-104-H-R50-P	50	55.9	40.9	2~40				
ESM-104-H-400+ESG-104-H-R100-P	100	70	63	1~20				
ESM-104-H-400+ESG-104-H-R200-P	200	70	63	0.5~10				

● Gearhead Mounted Motor Specifications and Size

3. Hollow Shaft Gearhead mounted Motor Specification

• 30W

Part Number	Gear Ratio	Permissible Torque (N · m)		Permissible Speed Range (rpm)	Unit Weight (Kg)	Permissible Overhung		Permissible Thrust Load (N)
		100~3000 r/min	4000 r/min			10mm from shaft end	20mm from shaft end	
ESM-60-H-30+ESG-60-H-R5-H	5	0.4	0.3	20~400	1.2	450	370	200
ESM-60-H-30+ESG-60-H-R10-H	10	0.85	0.64	10~200		500	400	
ESM-60-H-30+ESG-60-H-R15-H	15	1.3	0.96	6.7~133				
ESM-60-H-30+ESG-60-H-R20-H	20	1.7	1.3	5~100				
ESM-60-H-30+ESG-60-H-R30-H	30	2.6	1.9	3.3~67				
ESM-60-H-30+ESG-60-H-R50-H	50	4.3	3.2	2~40				
ESM-60-H-30+ESG-60-H-R100-H	100	8.5	6.4	1~20				
ESM-60-H-30+ESG-60-H-R200-H	200	17	12.8	0.5~10				

• 60W

Part Number	Gear Ratio	Permissible Torque (N · m)		Permissible Speed Range (rpm)	Unit Weight (Kg)	Permissible Overhung		Permissible Thrust Load (N)
		100~3000 r/min	4000 r/min			10mm from shaft end	20mm from shaft end	
ESM-80-H-60+ESG-80-H-R5-H	5	0.85	0.64	20~400	2.2	800	660	400
ESM-80-H-60+ESG-80-H-R10-H	10	1.7	1.3	10~200		1200	1000	
ESM-80-H-60+ESG-80-H-R15-H	15	2.6	1.9	6.7~133				
ESM-80-H-60+ESG-80-H-R20-H	20	3.4	2.6	5~100				
ESM-80-H-60+ESG-80-H-R30-H	30	5.1	3.8	3.3~67				
ESM-80-H-60+ESG-80-H-R50-H	50	8.5	6.4	2~40				
ESM-80-H-60+ESG-80-H-R100-H	100	17	12.8	1~20				
ESM-80-H-60+ESG-80-H-R200-H	200	34	25	0.5~10				

• 120W

Part Number	Gear Ratio	Permissible Torque (N · m)		Permissible Speed Range (rpm)	Unit Weight (Kg)	Permissible Overhung		Permissible Thrust Load (N)
		100~3000 r/min	4000 r/min			10mm from shaft end	20mm from shaft end	
ESM-90-H-120+ESG-90-H-R5-H	5	1.7	1.3	20~400	3.3	900	770	500
ESM-90-H-120+ESG-90-H-R10-H	10	3.4	2.6	10~200		1300	1110	
ESM-90-H-120+ESG-90-H-R15-H	15	5.1	3.8	6.7~133				
ESM-90-H-120+ESG-90-H-R20-H	20	6.8	5.1	5~100				
ESM-90-H-120+ESG-90-H-R30-H	30	10.2	7.7	3.3~67		1500	1280	
ESM-90-H-120+ESG-90-H-R50-H	50	17	12.8	2~40				
ESM-90-H-120+ESG-90-H-R100-H	100	34	25.5	1~20				
ESM-90-H-120+ESG-90-H-R200-H	200	68	51	0.5~10				

● Gearhead Mounted Motor Specifications and Size

4. Parallel Shaft Gearhead mounted Motor Size

• 30W

Motor Part Number	Gearhead Part Number	Gear Ratio	Mounting Bolt	L Length (mm)
ESM-60-H-30	ESG-60-H-R□-P	5~20	M4 P 0.7 · 50	34
		30~100	M4 P 0.7 · 55	38
		200	M4 P 0.7 · 60	43

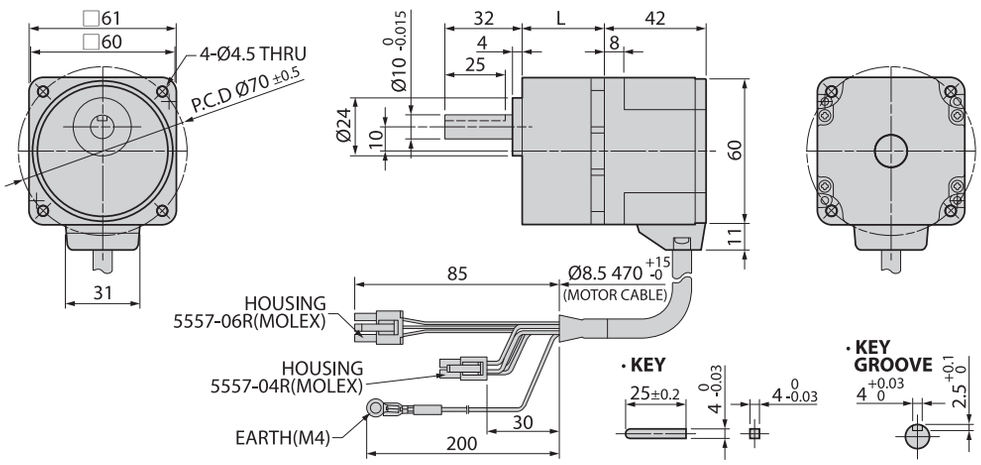

• 60W

Motor Part Number	Gearhead Part Number	Gear Ratio	Mounting Bolt	L Length (mm)
ESM-80-H-60	ESG-80-H-R□-P	5~20	M6 P 1.0 · 65	41
		30~100	M6 P 1.0 · 70	46
		200	M6 P 1.0 · 75	51

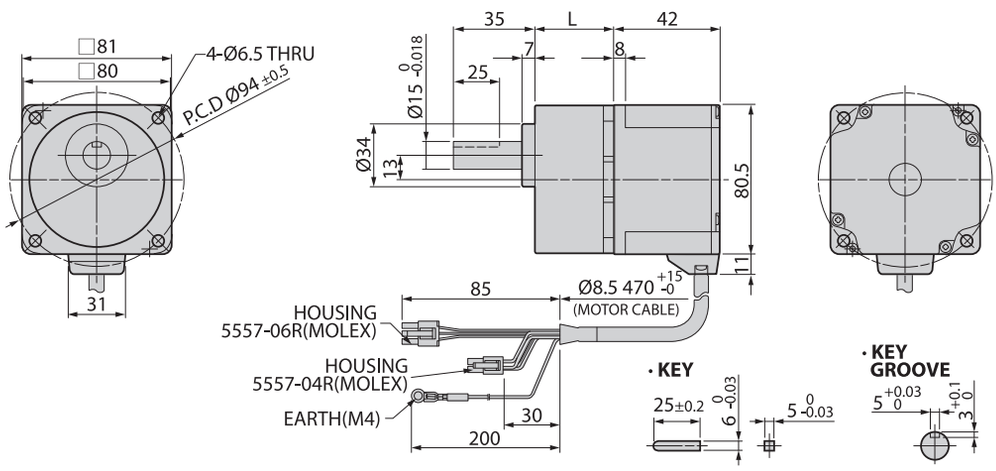

● Gearhead Mounted Motor Specifications and Size

5. Parallel Shaft Gearhead mounted Motor Size

• 120W

Motor Part Number	Gearhead Part Number	Gear Ratio	Mounting Bolt	L Length (mm)
ESM-90-H-120	ESG-90-H-R□-P	5~20	M8 P 1.25 · 75	45
		30~100	M8 P 1.25 · 90	58
		200	M8 P 1.25 · 95	64

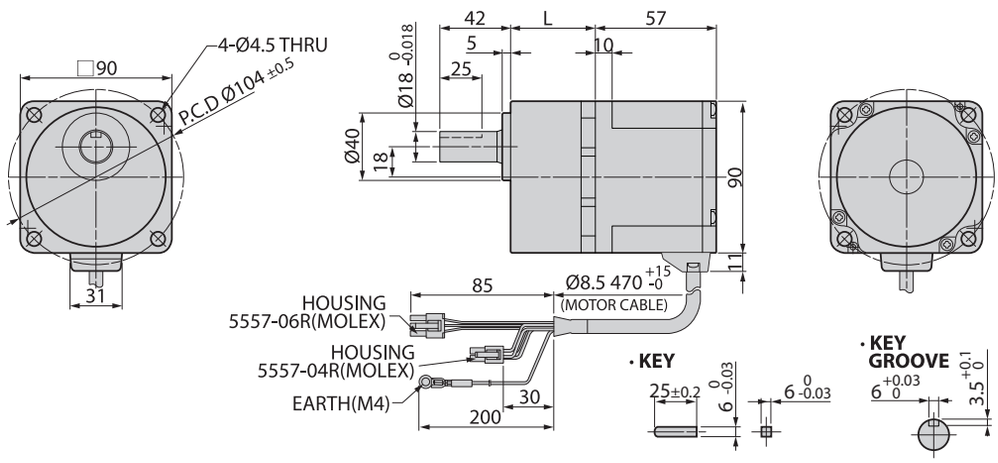

• 200W

Motor Part Number	Gearhead Part Number	Gear Ratio	Mounting Bolt	L Length (mm)
ESM-104-H-200	ESG-104-H-R□-P	5~20	M8 P 1.25 · 95	60
		30~100	M8 P 1.25 · 110	72
		200	M8 P 1.25 · 120	86

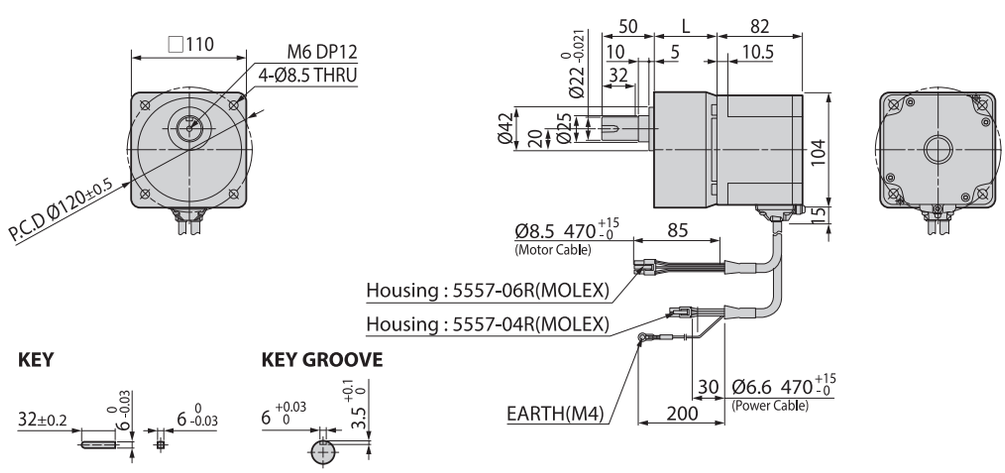

● Gearhead Mounted Motor Specifications and Size

6. Parallel Shaft Gearhead mounted Motor Size

• 400W

Motor Part Number	Gearhead Part Number	Gear Ratio	Mounting Bolt	L Length (mm)
ESM-104-H-400	ESG-104-H-R□-P	5~20	M8 P 1.25 · 95	60
		30~100	M8 P 1.25 · 110	72
		200	M8 P 1.25 · 120	86

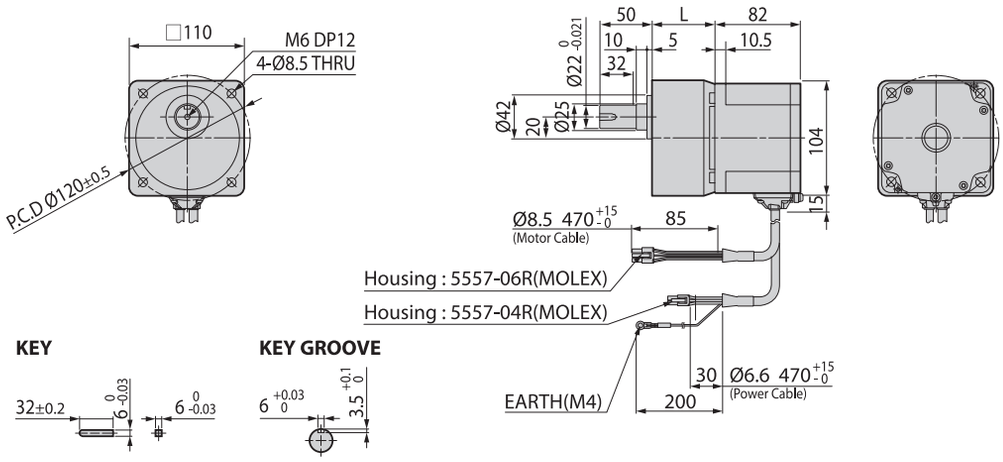

● Gearhead Mounted Motor Specifications and Size

7. Hollow Shaft Gearhead mounted Motor Size

• 30W

Motor Part Number	Gearhead Part Number	Gear Ratio	Mounting Bolt
ESM-60-H-30	ESG-60-H-R□-H	5~200	M5 P 0.8 · 65

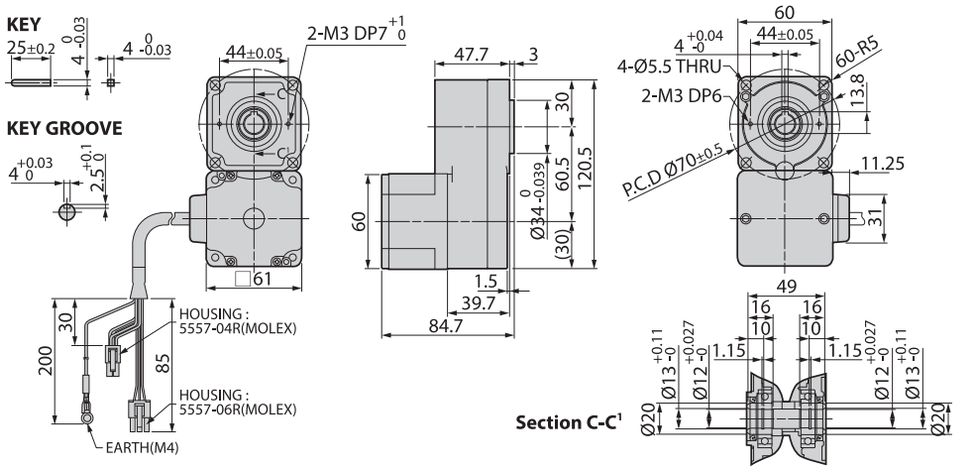

• 60W

Motor Part Number	Gearhead Part Number	Gear Ratio	Mounting Bolt
ESM-80-H-60	ESG-80-H-R□-H	5~200	M6 P 1.0 · 70

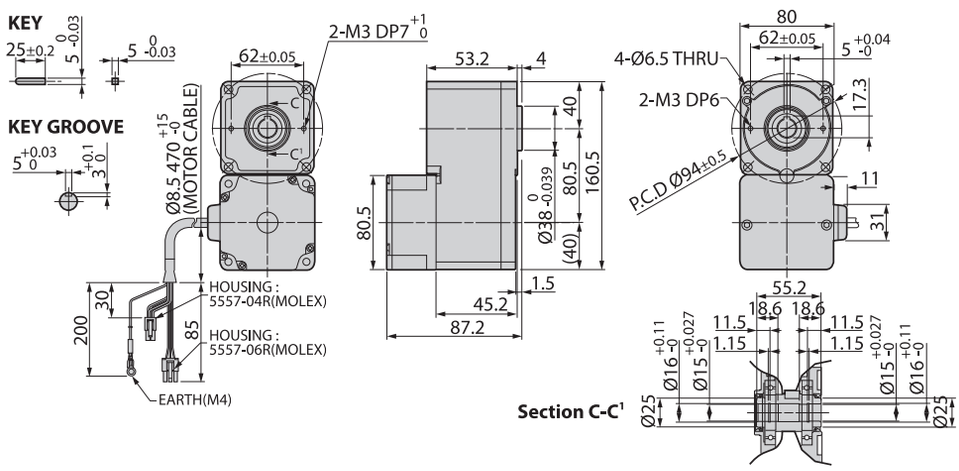

● Gearhead Mounted Motor Specifications and Size

8. Hollow Shaft Gearhead mounted Motor Size

• 120W

Motor Part Number	Gearhead Part Number	Gear Ratio	Mounting Bolt
ESM-90-H-120	ESG-90-H-R□-H	5~200	M8 P 1.25 · 90

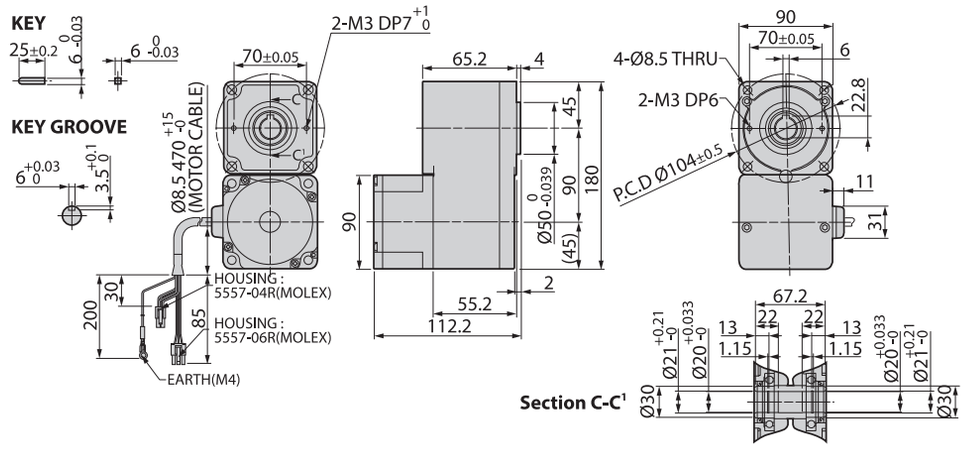

Setting and Operation

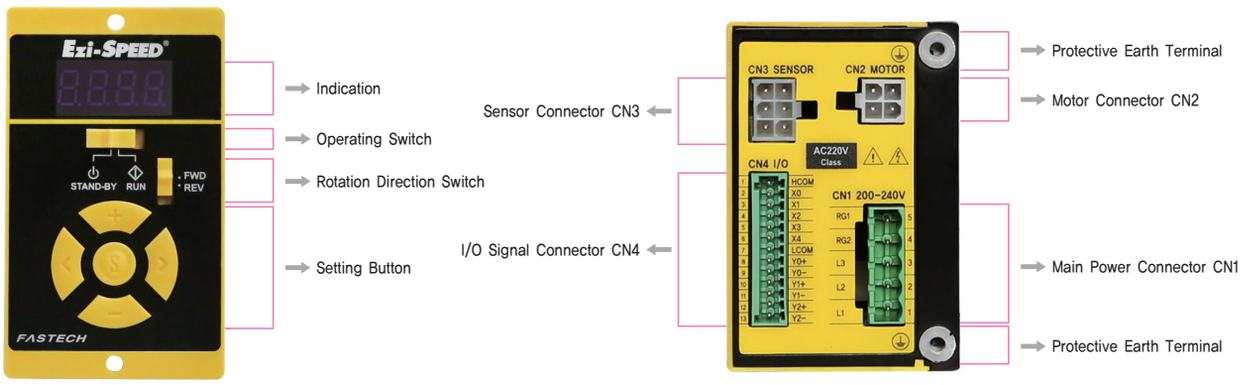

1. Setting

Display	Detail
Indication	Display the monitor, parameter, alarm, warning. etc
Operating Switch	The motor is started by setting it to the "RUN" position. Setting it to the "STAND-BY" position stop the motor
Rotation Direction Switch	Change the rotation direction of the motor with rotation direction switch.
Setting Button	Changes the speed and parameters. The value is set when the "S" button is pressed after changes are made.
Protective Earth Terminal	Ground either one of the protective earth terminals.
Sensor Connector CN3	Connects to the signal connector of the motor
Motor Connector CN2	Connects to the power connector of the motor
I/O Signal Connector CN4	Connects with the I/O signals
Main Power Connector CN1	Connects to the main power supply and regenerative resistor.

• Extended Functions

Ezi-SPEED can be perform various setting by operation button

Operating Mode	Details
Monitor Mode	Speed, Actual speed, Load factor, Alarm record and reset, Warning record and reset, operating data number, I/O monitor
Data Mode	Data 8 points, Operating speed, acceleration time, Deceleration time, Operating data reset
Parameter Mode	The acceleration/deceleration time, The overload alarm detection time, The speed upper limit and lower limit, speed reduction ratio, speed increasing ratio, panel initial view, Alarm of "Run" condition at power on, external operation signal input, External input function, External output function, Speed attainment width, Parameter mode reset
NVM saving mode	Parameter save to NVM

• Main Power Connector(CN1)

Single-Phase : 200-240V

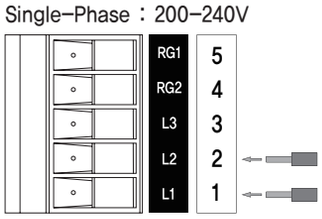

Three-Phase : 200-240V

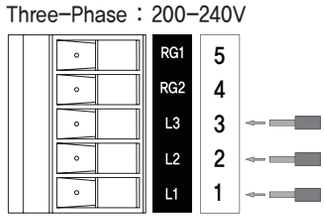

Regenerative resistor

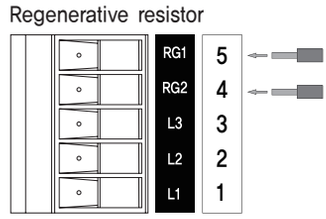

• Applicable Lead Wire Size

AWG18 ~ 14(0.75 ~ 2.0mm^2)

2. Operating

• Running the motor

Set the operation switch to the "RUN", the motor to start rotating.

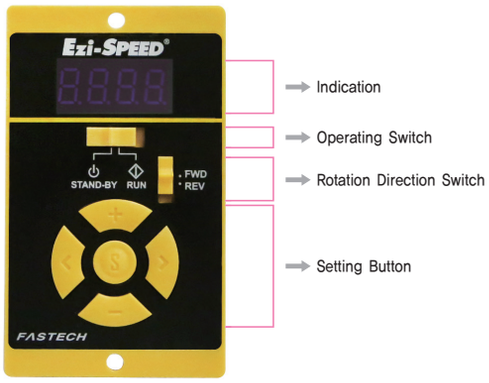

• Adjust the speed

Pressing the + button, the speed increase by 1 r/min

Pressing the − button, the speed decrease by 1 r/min

• Determining the speed

· Set

Pressing the S button, the rotation speed is determined.

When the display is blinking, the rotation speed has not set.

· Confirmation

Prevents the undesired changes in the speed, Press the S button for 5 seconds or more when STAND-BY mode when "LOCK" appears, the lock function is activated.

• Stopping the motor

Setting the operation switch to the "STAND-BY" side causes the motor to decelerate to a stop.
Setting the operation switch again to the "RUN" side causes the motor to start rotating at the set rotation speed.

• Changing the rotation direction

Change the rotation direction of the motor (gearhead) using the rotation direction switch. The rotation direction can be changed while operating. With the combination type, the rotation direction of the gearhead output shaft varies depending on the rear ratio of the gearhead.

3. Operation by I/O Signals

• Operation Method

· Using the built-in power supply in the driver, the motor is operated through external signals
· Connect Pins the I/O signal connector as in the figure of the right.
· When operating using external signals, change the parameter setting in the "external operation signal input" to "on". Refer to Manual.
· Using the external I/O signals, the motor can be operated 8-Speeds data.

Pin No.	Terminal Name	Input/ Output	Signal Name	Description
1	HCOM	Common	–	Input signal common : Sink Logic : +24V, Source Logic : 0V (GND)
2	X0	Input	[FWd]	The motor rotates is FWD direction during signal "ON"
3	X1	Input	[rEv]	The motor rotates is REV direction during signal "ON"
4	X2	Input	[P0]	Select the operating data
5	X3	Input	[P1]	Select the operating data
6	X4	Input	[A.rSt]	Reset the alarm
7	LCOM	Common	–	Input signal common
8	Y0+	Output	[SPd]	For every rotation of the motor, 30 pulses are output
9	Y0−	Output		
10	Y1+	Output	[AL.on]	It turns off when an alarm is generated (Normally closed)
11	Y1−	Output		
12	Y2+	Output	[MovE]	It turns on when the motor is operated (Normally opened)
13	Y2−	Output		

※ [ ] Function in [ ] is assigned at shipment
※ Can be assigned required functions to 5 input signals(X0~X4) and 3 output signals(Y0~Y2)
· Input signals : Can be used 5 functions out of FWd(CW rotation), rEv(CCW rotation), P0(operation data 1), P1((operation data 2), P2(operation data 2), A.rst(Alarm reset), E.Err(External alarm), H-Fr(Motor activation / deactivation)
· Output signals : Can be used 3 functions out of SPd(Speed output), AL.on(Alarm output), AL.ov(Overvoltage alarm output), OvLd(Overload alarm output), Mov(Motor operation output), vA(Speed attainment alarm), WnG(Warning alarm)

• Applicable Lead Wire Size

AWG26 ~ 20(0.14 ~ 0.5mm^2)

• Timing Chart

In case of parameter “external operation signal input” to “on” and the rotation direction switch is set to “FWD”.

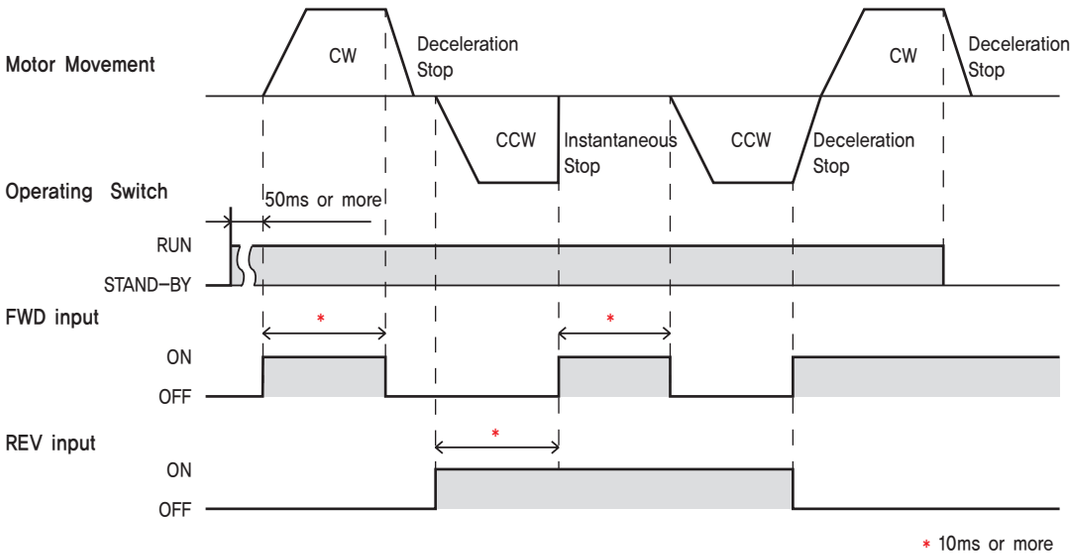

- The motor rotates when either FWD input or REV input is set to “ON”.
- The motor instantaneous stop when FWD input and REV input is set to “ON” at the same time.

• Connection example for I/O signals and programmable controller

This is connection example when the motor is operated using a transistor output type programmable controller.

• SINK LOGIC

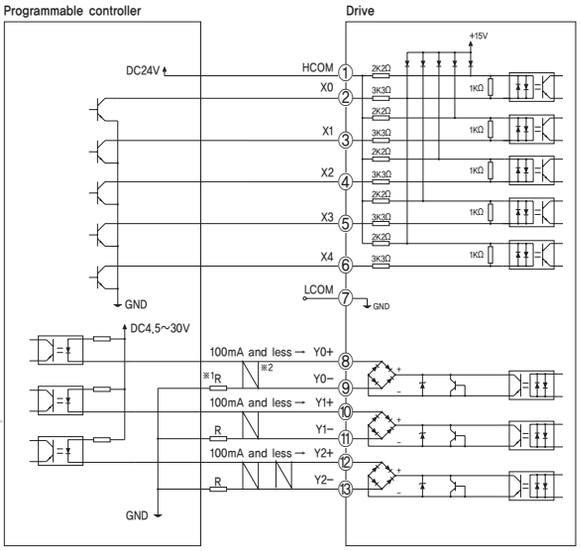

• SOURCE LOGIC

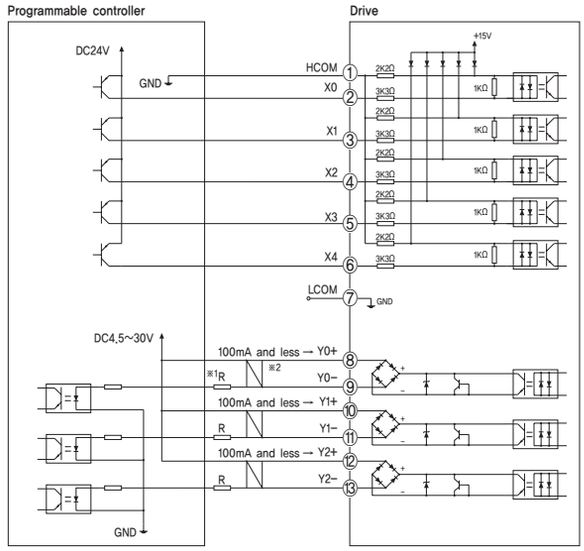

※1) Limited resistance
In the case of 24 VDC : 680Ω~2.7kΩ(2W)
In the case of 5 VDC : 150Ω~560Ω(0.5W)

※2) Twisted Pair Shield Cable

⚠ Warning

For the Y0, Y1 and Y2, be sure to keep the current value at 100mA or less. If the current exceeds this value, connect the limiting resistor R.

• In the case of using a external controller with a built-in clamp diode

If a external controller with a built-in clamp diode is used, a leakage path may form and cause the motor to operate even when the external controller power is off, as long as the drive power is on.
Since the power capacity of the controller is different from that of the drive, the motor may operate when the external controller and drive powers ate turned on or off simultaneously.
When powering down, turn off the drive power first, followed by the external controller power.
When powering up, turn off the external controller power first, followed by the drive power.

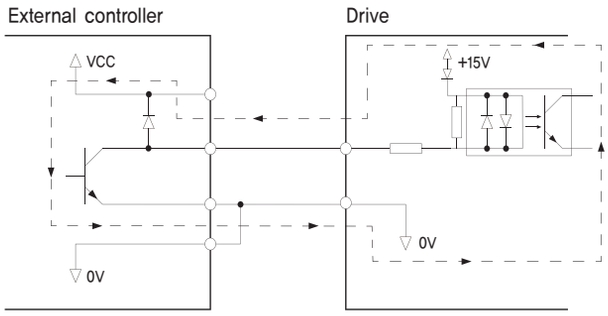

• 8-Speed Operation (In the case of the "external operation signal input" parameter is set to "ON")

1. Set the operation switch to the "RUN" side
2. Select the operation data number using the P0, P1 and P2 inputs.
3. When either of the FWD input or REV input is turned ON, the motor will rotate.
4. Switch the operation data number using the P0, P1 and P2 inputs.
5. When the FWD input or REV input which has been turned ON is turned OFF, the motor will stop.

Operation data No.	P0	P1	P2	Rotation speed [rpm]
0	OFF	OFF	OFF	1000
1	ON	OFF	OFF	500
2	OFF	ON	OFF	2000
3	ON	ON	OFF	1500
4	OFF	OFF	ON	3000
5	ON	OFF	ON	2500
6	OFF	ON	ON	4000
7	ON	ON	ON	3500

* Setting speed value is example, can change to need speed.

When changing from the present speed to the new speed, the acceleration time and deceleration time set in the next operation data number are used.

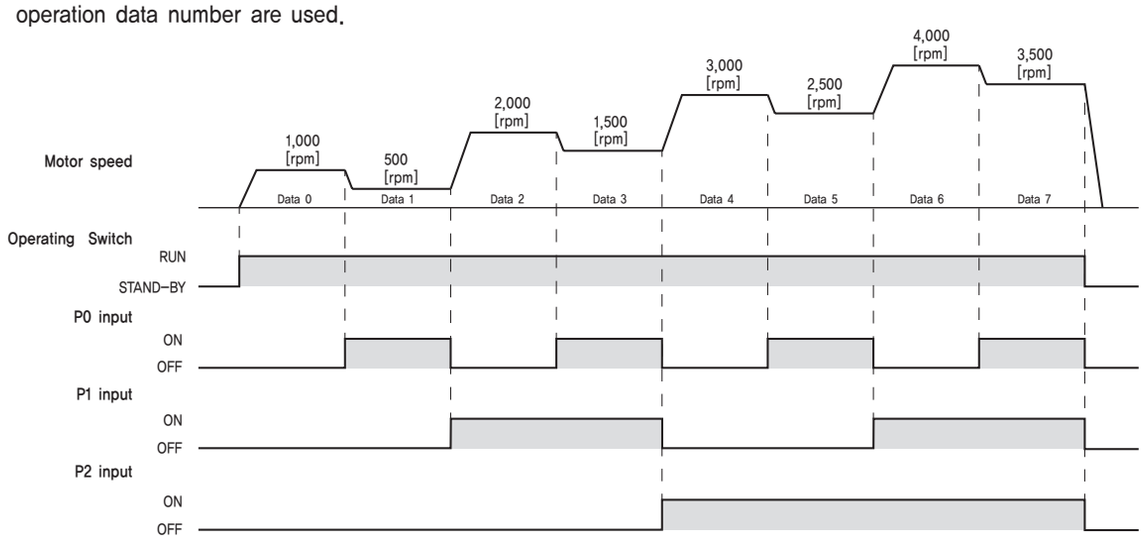

4. Monitor Mode Display

Item	Display	Description
Setting speed display and speed adjustment [RPM]	50	Display of setting motor speed
Actual speed [RPM]	0	Monitors the actual speed of motor. Monitors the rotation speed of gear output shaft or conveyor transfer speed when the “speed reduction ratio” parameter is set. When the “speed increasing ratio” parameter is set, the rotation speed being increased by external mechanism is displayed.
Load factor [%]	L. 0	Monitors the current load factor based on the rated torque being 100%. Monitor is load factor of motor shaft. No gearhead type. In case of gearhead mounted motor type, permissible torque is different by reduction ratio of gearhead. Please use checking permissible torque limit of gearhead.
Alarm record display and record reset	AL.rc	Monitors the alarm record. You can check alarm record and delate alarm record.
Warning record display and record reset	Wn.rc	Monitors the warning record. You can check warning record and delate warning record.
Operation data number	oP.d–	Monitors the operation data No. current selected.
I/O monitor	io	You can check the ON/OFF status of I/O signal of drive. If the signal is ON, the corresponding LED is lit. if the signal is OFF, the LED is unlit. **Input signals** 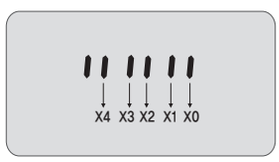 **Output signals** 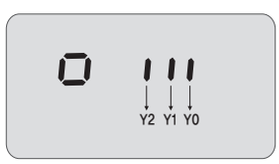

5. Protection functions and LED display

Alarm Code	Alarm type	Cause	Remedial action	Alarm reset
[AL.--]	Alarm record delate	-	-	-
[AL.UV.]	Under voltage	The power supply voltage be-came lower than approximately 60% of the rated voltage	1. Check the power supply voltage 2. Check the wiring of the power supply cable	Possible
[AL.oV.]	Over voltage	1. The power supply voltage exceeded approximately 120% of the rated voltage. 2. Vertical drive(gravitational operation) was performed or a load exceeding the permissible load inertia was driven.	1. Check the power supply voltage 2. If this alarm occurs during operation, reduce the load or make the acceleration/decelera-tion time longer.	Possible
[AL.oT.]	Overheat	The temperature inside drive exceeded the alarm detection temperature.	Review the ambient temperature	Possible
[AL.oC]	Overcurrent	Excessive current has flown through the drive due to ground fault, etc	Check the wiring between the drive and motor for damage	Not Possible
[AL.SF]	Speed feedback	Actual speed and set speed are different.	1. Check the power supply voltage 2. Check the load	Possible
[AL.SS]	Sensor error (Hall sensor)	The motor sensor signal line ex-perienced an open circuit during operation or the motor signal connector came off.	Check the wiring between the drive and motor.	Possible
[AL.oS]	Overspeed	The rotation speed of the motor output shaft exceeded approxi-mately 4800rpm	1. Reduce the load 2. Review the operation pattern such as acceleration/decelera-tion time.	Possible
[AL.oL]	Overload	1. A load exceeding the con-tinuous duty region was applied to the motor for the time ex-ceeded the value set in the "The overload alarm detection time" parameter. 2. The motor was started run-ning under the state that the motor temperature was low.		Possible
[AL.oP]	Operation at power-on	When the "external operation signal input" parameter was set to "OFF", while the operation switch was set to the "RUN" side, the power was turned on again.	Set the operation switch to the "STAND-BY" side from the "RUN" side. Next press "S" button.	Possible
		When the "external operation signal input" parameter was set to "ON", while the FWD input or REV input was turned ON, the power was turned on again.	1. Set the operation switch to the "STAND-BY" side from the "RUN" side. 2. Turn the FWD input or REV input from ON to OFF.	
[AL.Et]	External Error (From external input signal)	The motor instantaneous stop when EXT-ERROR(Stop) input.	1. Check the EXT-ERROR input. 2. Change status from activated to deactivated.	Possible

6. I/O Signal Connector(IN/OUT)

No.	Function	Input / Output
1	HCOM	Common
2	X0	Input
3	X1	Input
4	X2	Input
5	X3	Input
6	X4	Input
7	LCOM	Common
8	Y0+	Output
9	Y0−	Output
10	Y1+	Output
11	Y1−	Output
12	Y2+	Output
13	Y2−	Output

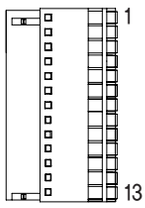

8. Sensor Connector(SENSOR)

No.	Function
1	+5V
2	Shield
3	GND
4	HALL_U
5	HALL_V
6	HALL_W

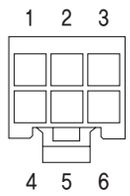

7. Motor Connector(MOTOR)

No.	Function
1	–
2	BLDC_U
3	BLDC_W
4	BLDC_V

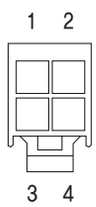

9. Main Power Connector(POWER)

No.	Function
1	L1
2	L2
3	L3
4	RG2
5	RG1

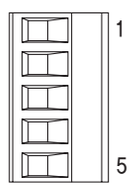

* Connecting to RG1, RG2 terminals when use a regenerative resistor. A regenerative resistor can be used when the deceleration time is short or when the large inertia is driven by providing a regenerative resistor contact terminal.
* Please refer to manual about detail spec of a regenerative resistor.

◆ Cable connector

This connector is provided with Ezi-SPEED. When purchasing optional cables, we don't provided cable connector.

CN1 : Main power connector(PWR)

Item	Specification	Manufacturer
Terminal Block	CPF5.08-05P	STELVIO

CN4 : I/O Signal Connector(IN/OUT)

Item	Specification	Manufacturer
Terminal Block	15EDGKD-13P	DEGSON

System Diagram

1. 30, 60, 120W

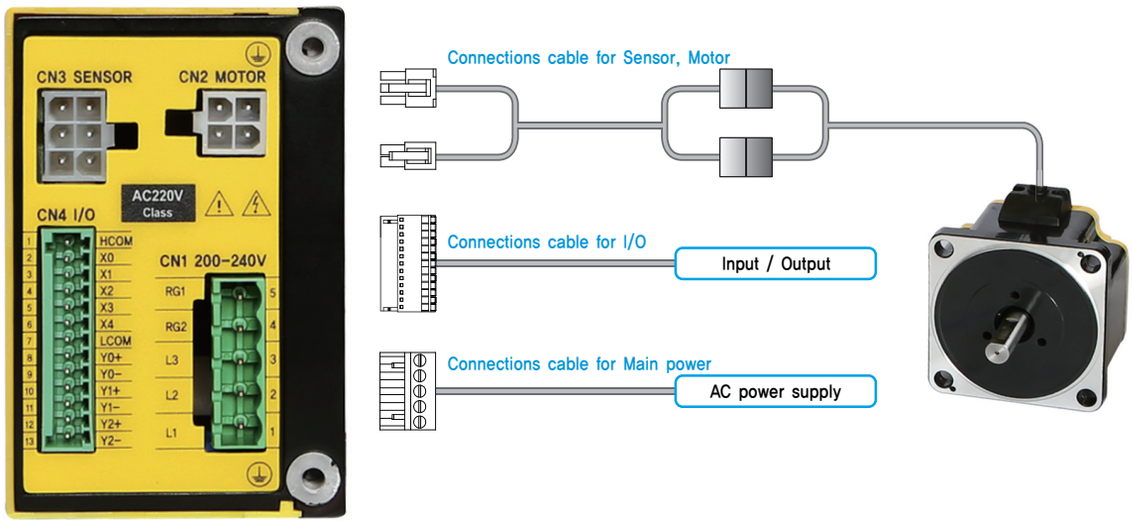

Item	I/O connection cable	Sensor connection cable	Motor connection cable	Main power connection cable
Standard Length	-	50cm	50cm	-
Maximum Length	20m	10m	10m	3m

1. Optional Cable

Motor cable of 30, 60, 120W

This cable is used connect the wiring between the motor(30W, 60W and 120W) and drive.
This connection cable is one cable with the motor relay cable and sensor relay cable.

Cable Code	Length[m]	Note
CSPD-A-□□□F	1, 2, 3, 5, 7, 10	Fixed cable

□ is cable length. Maximum length is 10m.

System Diagram

2. 200, 400W

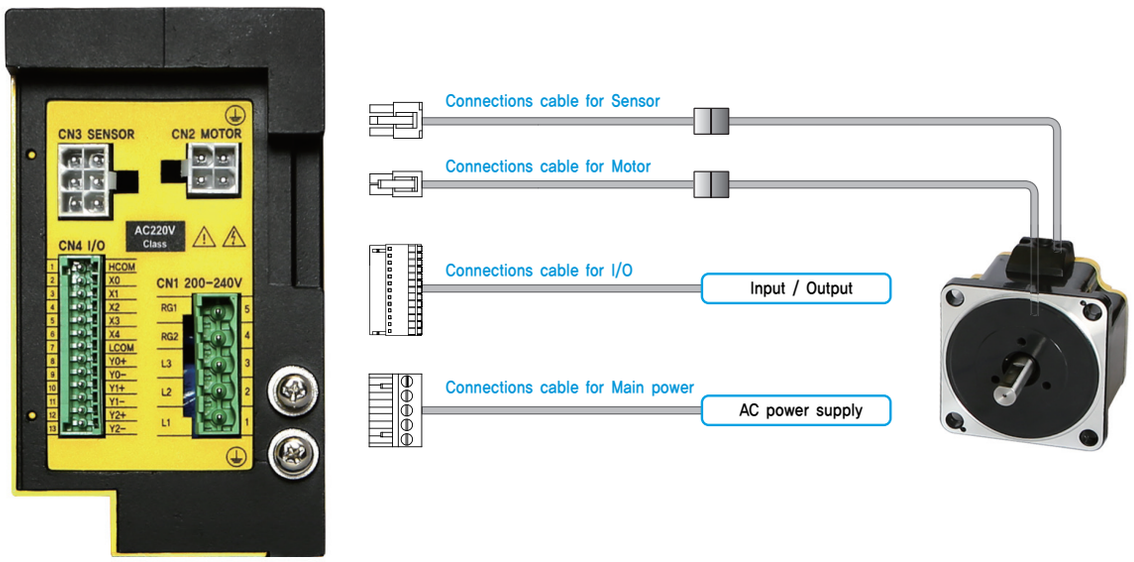

Item	I/O connection cable	Sensor connection cable	Motor connection cable	Main power connection cable
Standard Length	–	50cm	50cm	–
Maximum Length	20m	10m	10m	3m

1. Optional Cable

Motor cable of 200, 400W

This cable is used connect the wiring between the motor(200W, 400W) and drive.
This connection cable is each cable (Two line) with the motor relay cable and sensor relay cable.

① Motor connection cable

Cable Code	Length[m]	Note
CSPD-M-□□□F	1, 2, 3, 5, 7, 10	Fixed cable

□ is cable length. Maximum length is 10m.

② Sensor connection cable

Cable Code	Length[m]	Note
CSPD-S-□□□F	1, 2, 3, 5, 7, 10	Fixed cable

□ is cable length. Maximum length is 10m.

● External Wiring Diagram

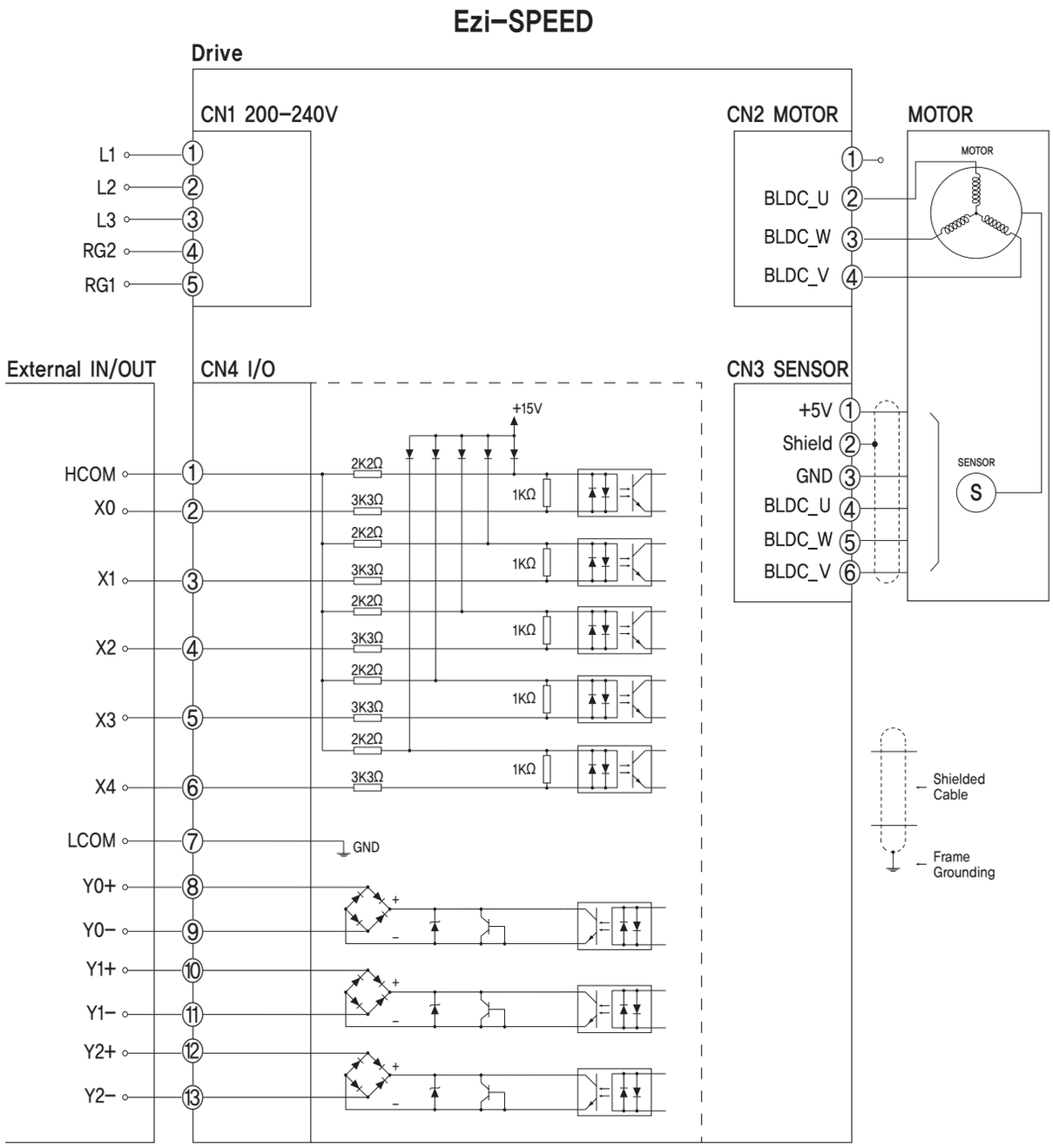

FASTECH Ezi-SPEED

FASTECH

Fast, Accurate, Smooth Motion

FASTECH Co., Ltd.
Rm#1202, 401-dong, Bucheon Techno-Park,
655, Pyeongcheon-ro, Bucheon-si Gyeonggi-do,
Republic of Korea (Zip:14502)
TEL : +82-32-234-6300 FAX : +82-32-234-6302
E-mail : fastech@fastech.co.kr
Homepage : www.fastech.co.kr

©Copyright 2018 FASTECH Co., Ltd.
All Rights Reserved, Mar 22, 2018 Rev.1