STANDARD EQUIPMENT

- ISO Standard cabin
  - All-weather steel cab with 360° visibility
  - Safety glass windows
  - Rise-up type windshield wiper
  - Sliding side window(LH)
  - Lockable door
  - Hot & cool box
  - Storage compartment & Ashtray
  - Transparent cabin roof-cover
  - Radio / USB Player
  - 12 volt power outlet (24V DC to 12V DC converter)
  - Handsfree mobile phone system with USB
  - Sun visor
- Computer aided power optimization (New CAPO) system
  - 3-power mode, 2-work mode, User mode
  - Auto deceleration & one-touch deceleration system
  - Auto warm-up system
  - Auto overheat prevention system
- Automatic climate control
  - Air conditioner & heater
  - Defroster
- Self-diagnostics system
- Starting Aid (air grid heater) for cold weather
- Centralized monitoring
  - LCD display
  - Engine speed or Trip meter/Accel.
  - Clock
  - Gauges
  - Fuel level gauge
  - Engine coolant temperature gauge
  - Hyd. oil temperature gauge
  - Warnings
  - Check Engine
  - Overload
  - Communication error
  - Low battery
  - Air cleaner clogging
  - Indicators
  - Max power
  - Low speed/High speed
  - Fuel warmer
  - Auto idle
- Door and cab locks, one key
- Three outside rearview mirrors
- Fully adjustable suspension seat with seat belt
- Pilot-operated slidable joystick
- Console box height adjust system
- Four front working lights
- Electric horn
- Batteries (2 x 12V x 80 AH)
- Battery master switch
- Removable clean-out dust net for oil cooler
- Automatic swing brake
- Removable reservoir tank
- Fuel pre-filter with fuel warmer
- Boom holding system
- Arm holding system
- Track shoes (600mm, 24")
- Track rail guard
- Accumulator for lowering work equipment
- Electric transducer
- Lower frame under cover (Normal)

OPTIONAL EQUIPMENT

- Fuel filler pump (35 L/min)
- Beacon lamp
- Safety lock valve for boom cylinder with overload warning device
- Safety lock valve for arm cylinder
- Single-acting piping kit (breaker, etc.)
- Double-acting piping kit (clamshell, etc.)
- Quick coupler
- Travel alarm
- Booms
  - 4.1m, 13' 5"
  - 4.6m, 15' 1"
  - 4.9m, 16' 1"
- Arms
  - 1.9m, 6' 3"
  - 2.1m, 6'11"
  - 2.5m, 8' 2"
  - 3.0m, 9'10"
- Climate control
  - Air conditioner only
  - Heater only
- Cabin FOPS/FOG (ISO/DIS 10262 Level II)
  - FOPS (Falling Object Protective Structure)
  - FOG (Falling Object Guard)
- Cabin ROPS (ISO 12117-2)
  - ROPS (Roll-over Protective Structure)
- Cabin guard-front
  - Wire net
  - Fine net
- Cabin roof-steel cover
- Cabin lights
- Cabin front window rain guard
- Track shoes
  - Triple grousers shoe (500mm, 20")
  - Triple grousers shoe (700mm, 28")
  - Triple grousers shoe (800mm, 32"), R140LCM-9
  - Double grousers shoe (710mm, 28"), R140LCM-9
  - Single grousers shoe (960mm, 38"), R140LCM-9
- R140LCD-9 Blade : 550mm(1' 8") x 2,500mm(8' 2")
  550mm(1' 8") x 2,600mm(8' 6")
- Lower frame under cover(Additional)
- Tool kit
- Operator suit
- Rearview camera
- Seat
  - Adjustable air suspension seat
  - Adjustable air suspension seat with heater
  - Mechanical suspension seat
- Pattern change valve (2 patterns)
- Hi-mate (Remote Management System)
- Air compressor

* Standard and optional equipment may vary. Contact your Hyundai dealer for more information. The machine may vary according to International standards.
* The photos may include attachments and optional equipment that are not available in your area.
* Materials and specifications are subject to change without advance notice.
* All imperial measurements rounded off to the nearest pound or inch.

PLEASE CONTACT

HYUNDAI
HEAVY INDUSTRIES CO.,LTD.
CONSTRUCTION EQUIPMENT

Head Office
1000 BANGEOJINSUNHWAN-DORO, DONG-GU, ULSAN, 682-792, KOREA
TEL:(82)52-202-7722, 9807 FAX:(82)52-202-7720

999009-500590

www.hyundai-ce.com 2012. 05 Rev 2

We build a better future

Robex 140LC-9

With Tier 3 Engine installed



HYUNDAI
HEAVY INDUSTRIES CO.,LTD.

Pride at Work

Hyundai Heavy Industries strives to build state-of-the art earthmoving equipment to give every operator maximum performance, more precision, versatile machine preferences, and proven quality. Take pride in your work with Hyundai!

Robex 140LC-9



*Photo may include optional equipment.

Machine Walk-Around

Engine Technology

Proven / reliable, fuel efficient Mitsubishi D04FD-TAA Engine
Electronically controlled for optimum fuel to air ratio and clean, efficient combustion
Low noise / Auto engine warm up feature / Anti-restart feature

Hydraulic System Improvements

New patented hydraulic control for improved controllability / Improved control valve design for added efficiency and smoother operation / New auto boom and swing priority system for optimum speed / New auto power boost feature for additional power when needed / Improved arm-in and boom-down flow regeneration system for added speed and efficiency

Pump Compartment

Industry-leading, powerful, reliable Kawasaki designed, variable volume in-line axial piston pumps
New compact solenoid block equipped with 4 solenoid valves, 1 EPPR valve, 1 check valve accumulator and pilot filter - controls 2 speed travel, power boost, boom priority, safety lock

Enhanced Operator Cab

Improved Visibility
Enlarged cab with improved visibility / See-through upper skylight for visibility and ventilation
Larger right-side glass, now one piece, for better right visibility
Safety glass windows on all sides - less expensive than (polycarbonate) and won't scratch or fade
Closeable sunshade for operator convenience / Reduced front window seam for improved operator view

Improved Cab Construction
New steel tube construction for added operator safety, protection and durability
New window open/close mechanism designed with cable and spring lift assist and single latch release

Improved Suspension Seat / Console Assembly
Ergonomic joysticks with auxiliary control buttons for attachment use. Now with new sleek styling
Heated suspension (standard) or optional air ride suspension with heat
New joystick consoles - now adjustable in height by way of dial at bottom
Adjustable arm rests - turn dial to raise or lower for optimum comfort

Advanced 7" Color Cluster
New Color LCD Display with easy to read digital gauges for hydraulic oil temperature, water temperature, and fuel. Simplified design makes adjustment and diagnostics easier. Also, new enhanced features such as rear-view camera are integrated into monitor.
3 power modes : (P) Power, (S) Standard, (E) Economy, 2 work modes : Dig & Attachment, (U) User mode for operator preference
Enhanced self-diagnostic features with GPS download capability
One pump flow or two pump flow for optional attachment is now selectable through the cluster / New anti-theft system with password capability
Boom speed and arm regeneration are selectable through the monitor.
Auto power boost is now available - selectable (on/off) through the monitor.
Powerful air conditioning and heat with auto climate control, 20% more heat and air output than 7A series!
RMS (Remote Management System) works through GPS/satellite technology to ultimately provide better customer service and support.

Undercarriage

Sealed track chain (urethane seals) / Standard track rail guard / Comfortable bolt-on steps
Large upper roller cut-outs for debris clean-out / Tapered side frames for debris clean-out
Grease-type track tensioner

Preference

Operating a 9 series is unique to every operator. Operators can fully customize their work environment and operating preferences to fit their individual needs.

*Photo may include optional equipment.



Wide Cabin with Excellent Visibility

The newly designed cabin was conceived for more space, a wider field of view and operator comfort. Special attention was given to a clear, open and convenient interior with plenty of visibility on the machine surroundings and the job at hand. This well balanced combination of precision aspects put the operator in the perfect position to work safely and securely.

Operator Comfort

In 9 series cabin you can easily adjust the seat, console and armrest settings to best suit your preferred comfort level. Seat and console position and height can be set together and independent from each other. Other preference settings that add to overall operator comfort include the full automatic high capacity airconditioning system and the Radio / USB player.





Reduced Stress

Work is stressful enough. Your work environment should be stress free. Hyundai's 9 series provides improved cab amenities, additional space and a comfortable seat to minimize stress to the operator. A powerful climate control system provides the operator with optimum air temperature. An advanced audio system with USB player, AM/FM stereo, plus remotely located controls is perfect for listening to music favorites.
Operators can even talk on the phone with the hands-free cell phone feature.



Operator - Friendly Cluster

The advanced new cluster with 7 inch wide color LCD screen and toggle switch allows the operator to select his personal machine preferences. Power and work mode selection, self diagnostics, optional rear-view camera, maintenance check lists, start-up machine security, and video functions were integrated into the cluster to make the machine more versatile and the operator more productive.



Precision

Innovative hydraulic system technologies make the 9 series excavator fast, smooth and easy to control.

*Photo may include optional equipment.

Computer Aided Power

The engine horsepower and hydraulic horsepower together in unison through the advanced CAPO(Computer Aided Power Optimization) system, flow for the job at hand. Operator can set their own preferences for boom or swing priority, power mode selection and optional work tools at the touch of a button.
The CAPO system also provides complete self diagnostic features and digital gauges for important information like hydraulic oil temperature, water temperatures and fuel level. This system interfaces with multiple sensors placed throughout the hydraulic system as well as the electronically controlled engine to provide the optimum level of engine power and hydraulic flow.

Power Mode

P (Power Max) mode maximizes machine speed and power for mass production.
S (Standard) mode provides a reduced, fixed rpm for optimum performance and improved fuel economy. For maximum fuel savings and improved control, E (Economy) mode provides precise flow and engine power based on load demand. Three unique power modes provide the operator with custom power, speed and fuel economy.

Work Mode

The work mode allows the operator to select single flow attachments like a hydraulic breaker or bi-directional flow attachments like a crusher. Flow settings unique to each attachment can be programmed from within the cluster.

User Mode

Some jobs require more precise machine settings. Using the versatile U (User) mode, the operator can customize engine speed, pump output, idle speed and other machine settings for the job at hand.

Improved Hydraulic System



To achieve optimum precision, Hyundai redesigned the hydraulic system to provide the operator with super fine touch and improved controllability. Improved pump flow control reduces flow when controls are not being used to minimize fuel consumption.
Improved spool valves in the control valve are engineered to provide more precise flow to each function with less effort.
Improved hydraulic valves, precision-designed variable volume piston pumps, fine-touch pilot controls, and enhanced travel functions make any operator running a 9 series look like a smooth operator. Newly improved features include arm-in and boom-down flow regeneration, improved control valve technology and innovative auto boom and swing priority for optimal performance in any application.

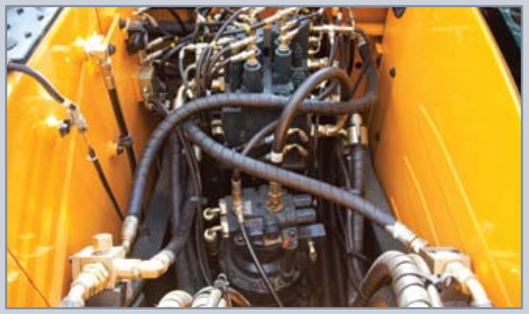

Auto Boom-swing Priority

This smart function automatically and continuously looks the ideal hydraulic flow balance for the boom and swing motions of the machine. The advanced CAPO system monitors the hydraulic system and adjusts its settings to maximize performance and productivity.

Performance

9 series is designed for maximum performance to keep the operator working productively.



*Photo may include optional equipment.



Track Rail Guard & Adjusters

Durable track rail guards keep track links in place. Track adjustment is made easy with standard grease cylinder track adjusters and shock absorbing springs.

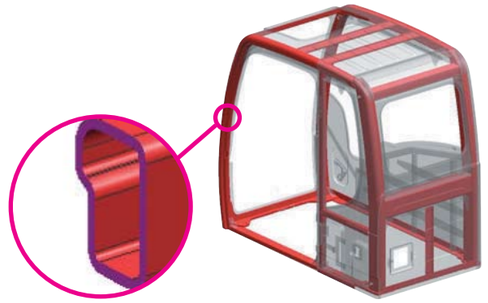

Structure Strength

The 9 series cabin structure has been fitted with stronger but slimmer tubing for more safety and improved visibility. Low-stress, high strength steel is integrally welded to form a stronger, more durable upper and lower frame. Structural integrity was tested by way of FEM (Finite Elements Method) analysis and long-term durability tests.
The optional ROPS(Roll Over Protective Structure) cab can be equipped to enhance operator safety.

Mitsubishi D04FD-TAA Engine

The Tier Ⅲ, four cylinder, 4 cycle, turbo-charged, charge air cooled, Mitsubishi D04FD-TAA engine provides maximum power, reliability, optimum fuel economy, and reduced emissions. Electronically controlled fuel injection and diagnostic capabilities add to the engines efficiency and serviceability.

Heavy-duty strength

Everyone who's ever worked on construction equipment knows, there is no substitute for power and durabilty. The D04FD-TAA handles the toughest loads and the roughest work conditions.
At the same time, it delivers better fuel economy, has better cold starting capability and is up to 50% quieter in operation. Plus, the heavy-duty design of the D04FD-TAA engine block and components add reliability and durability you can count on every day, year after year.
Both fuel-efficiency and response are significantly enhanced with the Mitsubishi high pressure common rail fuel system. The system delivers high pressure injection, independent of engine speed, for optimum performance and flexibility at every rpm.

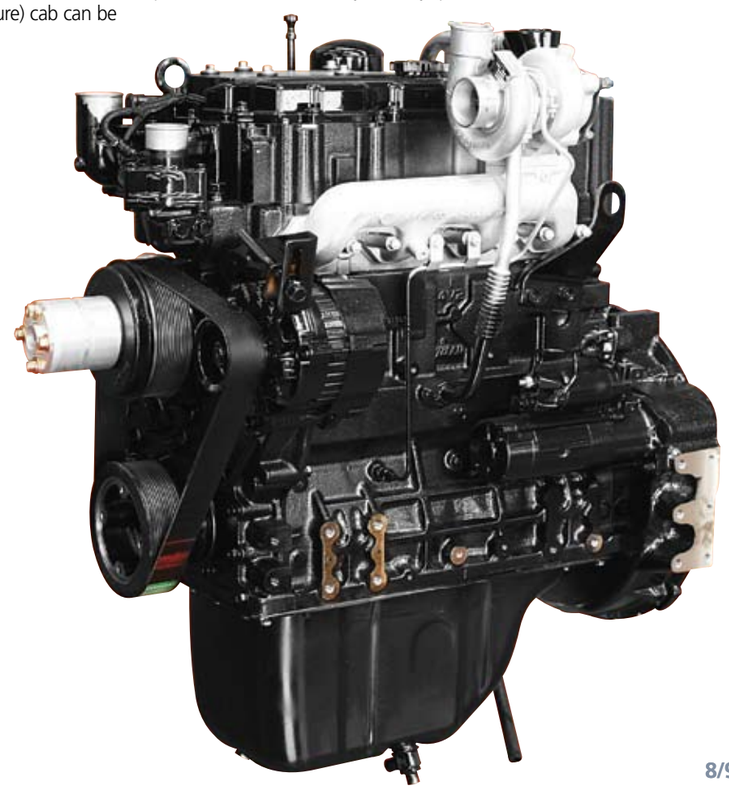

Profitability

9 series is designed to maximize profitability through improved efficiencies, enhanced service features and longer life components.



*Photo may include optional equipment.



Hi-mate (Remote Management System)

Hi-mate, Hyundai's proprietary remote management system, provides operators and dealer service personnel access to vital service and diagnostic information on the machine from any computer with internet access. Users can pinpoint machine location using digital mapping and set machine work boundaries, reducing the need for multiple service calls. Hi-mate saves time and money for the owner and dealer by promoting preventative maintenance and reducing machine downtime.

Fuel Efficiency

9 series excavators are engineered to be extremely fuel efficient. New innovations like the variable speed fan clutch, two-stage auto decel system and the new economy mode help to conserve fuel and reduce the impact on the environment.







Easy Access

Ground-line access to filters, lube fittings, fuses, machine computer components and wide open compartments makes service more convenient on the 9 series.





Long-Life Components

9 series excavators were designed with bushings designed for long-life lube intervals (250 hrs) & polymer shims (wear resistant, noise reducing), long-life hydraulic filters (1,000hrs), long-life hydraulic oil (5,000hrs), more efficient cooling systems and integrated preheating systems which extend service intervals, minimize operating costs and reduce machine down time.

Specifications

ENGINE

MODEL			Mitsubishi D04FD-TAA
Type			Water-cooled, 4-cycle Diesel, 4-Cylinder in-line, Direct injection, Turbocharged, Charger air cooled, Low emission
Rated flywheel horse power	SAE	J1995 (gross)	119 HP (89 kW)/ 2,000 rpm
		J1349 (net)	113 HP (85 kW)/ 2,000 rpm
	DIN	6271/1 (gross)	121 PS (89 kW)/ 2,000 rpm
		6271/1 (net)	115 PS (85 kW)/ 2,000 rpm
Max. torque			45.4 kgf·m (328 lbf·ft)/ 1,700 rpm
Bore X stroke			102 x 130 mm (4.01" x 5.12")
Piston displacement			4,249cc (259 in³)
Batteries			2 X 12V X 80AH
Starting motor			24V- 5.0 kW
Alternator			24V- 50 Amp

HYDRAULIC SYSTEM

MAIN PUMP	
Type	Variable displacement piston pumps
Rated flow	2 X 123.5L /min (32.6 US gpm / 27.2 UK gpm)
Sub-pump for pilot circuit	Gear pump

Cross-sensing and fuel saving pump system.

HYDRAULIC MOTORS	
Travel	Two speed axial pistons motor with brake valve and parking brake
Swing	Axial piston motor with automatic brake

RELIEF VALVE SETTING	
Implement circuits	350 kgf/cm² (4,978 psi)
Travel	350 kgf/cm² (4,978 psi)
Power boost (boom, arm, bucket)	380 kgf/cm² (5,404 psi)
Swing circuit	285 kgf/cm² (4,054 psi)
Pilot circuit	40 kgf/cm² (568 psi)
Service valve	Installed

HYDRAULIC CYLINDERS	
No. of cylinder bore X stroke	Boom: 2-105 X 1,075 mm (4.1"X 42.3")
	Arm: 1-115 X 1,138 mm (4.5" X 44.8")
	Bucket: 1-100 X 840 mm (3.9" X 33.1")
	Blade: 2-100 X 250 mm (3.9" X 9.8")
	2-PCS boom : 2-105 X 975 mm (4.1" X 38.4")
	Adjust(boom): 1-145 X 613 mm (5.7" X 24.1")

DRIVES & BRAKES

Drive method	Fully hydrostatic type
Drive motor	Axial piston motor, in-shoe design
Reduction system	Planetary reduction gear
Max. drawbar pull	13,300 kgf (29,320 lbf)
Max. travel speed(high) / (low)	5.5 km/hr (3.4 mph) / 3.2 km/hr (2.0 mph)
Gradeability	35° (70 %)
Parking brake	Multi wet disc

CONTROL

Pilot pressure operated joysticks and pedals with detachable lever provide almost effortless and fatigueless operation.

Pilot control	Two joysticks with one safety lever (LH): Swing and arm, (RH): Boom and bucket(ISO)
Traveling and steering	Two levers with pedals
Engine throttle	Electric, Dial type

SWING SYSTEM

Swing motor	Fixed displacement axial pistons motor
Swing reduction	Planetary gear reduction
Swing bearing lubrication	Grease-bathed
Swing brake	Multi wet disc
Swing speed	12.0 rpm

COOLANT & LUBRICANT CAPACITY

Refilling	liter	US gal	UK gal
Fuel tank	270.0	71.3	59.4
Engine coolant	15.5	4.1	3.4
Engine oil	17.5	4.6	3.8
Swing device-gear oil	2.5	0.66	0.55
Final drive(each)-gear oil	2.2	0.6	0.5
Hydraulic system(including tank)	210.0	55.5	46.2
Hydraulic tank	124.0	32.8	27.3

UNDERCARRIAGE

The X-leg type center frame is integrally welded with reinforced box-section track frames. The undercarriage includes lubricated rollers, idlers, track adjusters with shock absorbing springs and sprockets, and a track chain with double or triple grouser shoes.

	R140LC/LCD-9	R140LCM-9
Center frame	X - leg type	
Track frame	Pentagonal box type	
No. of shoes on each side	46	47
No. of carrier roller on each side	1	2
No. of track roller on each side	7	7
No. of rail guard on each side	2	2

OPERATING WEIGHT (APPROXIMATE)

Operating weight, including 4,600mm (15′ 1″) boom, 2,500mm (8′ 2″) arm, SAE heaped 0.58m³ (0.76 yd³) bucket, lubricant, coolant, full fuel tank, full hydraulic tank, and all standard equipments.

MAJOR COMPONENT WEIGHT	
Upperstructure	3,820 kg (8,422 lb)
Boom (with Arm cylinder)	1,030 kg (2,270 lb)

OPERATING WEIGHT				
Shoes		Operating weight		Ground pressure
Type	Width mm (in)	kg(lb)		kgf/cm²(psi)
Triple grouser	500 mm (20″)	R140LC-9	13,790(30,400)	0.43(6.11)
		R140LCD-9	14,590(32,160)	0.45(6.40)
	600 mm (24″)	R140LC-9	13,980(30,820)	0.36(5.12)
		R140LCD-9	14,800(32,630)	0.38(5.40)
	700 mm (28″)	R140LC-9	14,210(31,330)	0.32(4.55)
	800 mm (32″)	R140LCM-9	16,880(37,210)	0.32(4.55)
Double grouser	710 mm (28″)	R140LCM-9	16,880(37,210)	0.36(5.12)
Single grouser	960 mm (38″)	R140LCM-9	17,110(37,720)	0.27(3.84)

BUCKETS

All buckets are welded with high-strength steel.

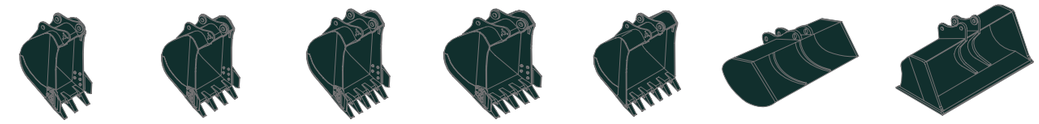

SAE heaped m³ (yd³): 0.23 (0.30) | 0.40 (0.52) 0.46 (0.60) | 0.52 (0.68) 0.58 (0.76) | 0.65 (0.85) | 0.71 (0.93) | ⊙ 0.45 (0.59) | ★ 0.55 (0.72)

Capacity m³ (yd³) SAE heaped	Capacity m³ (yd³) CECE heaped	Width mm (in) Without sidecutters	Width mm (in) With sidecutters	Weight kg (lb)	Recommendation mm (ft·in) 4,600 (15′ 1″) Boom 1,900 (6′ 3″) Arm	2,100 (6′ 11″) Arm	2,500 (8′ 2″) Arm	3,000 (9′ 10″) Arm	4,100 (13′ 5″) Boom 1,900 (6′ 3″) Arm	2,100 (6′ 11″) Arm	4,900 (16′ 1″) Adjustable Boom 1,900 (6′ 3″) Arm	2,100 (6′ 11″) Arm	2,500 (8′ 2″) Arm
0.23 (0.30)	0.20(0.26)	520(20.5)	620(24.4)	335(740)	●	●	●	■	●	●	●	●	●
0.40 (0.52)	0.35(0.46)	760(29.9)	860(33.9)	410(900)	●	●	●	■	●	●	●	●	●
0.46 (0.60)	0.40(0.52)	850(33.5)	950(37.4)	435(960)	●	●	●	▲	●	●	●	●	■
0.52 (0.68)	0.45(0.59)	935(36.8)	1,035(40.8)	460(1,010)	●	●	●	–	●	●	●	■	■
0.58 (0.76)	0.50(0.65)	1,030(40.6)	1,130(44.5)	480(1,060)	●	●	■	–	●	●	■	▲	▲
0.65 (0.85)	0.55(0.72)	1,110(43.7)	1,210(47.6)	500(1,100)	■	■	▲	–	●	■	▲	▲	–
0.71 (0.93)	0.60(0.78)	1,205(47.4)	-	540(1,190)	▲	▲	–	–	■	▲	▲	–	–
⊙ 0.45 (0.59)	0.40(0.52)	1,520(59.8)	-	410(900)	●	●	■	–	●	●	■	■	▲
★ 0.55 (0.72)	0.45(0.59)	1,800(70.9)	-	585(1,290)	■	■	▲	–	●	●	■	▲	▲

⊙ Ditching bucket
★ Slope finishing bucket

●: Applicable for materials with density of 2,000 kg /m³ (3,370 lb/ yd³) or less
■: Applicable for materials with density of 1,600 kg /m³ (2,700 lb/ yd³) or less
▲: Applicable for materials with density of 1,100 kg /m³ (1,850 lb/ yd³) or less

ATTACHMENT

Booms and arms are welded, a low-stress, full-box section design. 4.1m, 4.6m mono booms and 4.9m adjustable boom and 1.9m, 2.1m, 2.5m, 3.0m arms are available.

DIGGING FORCE

Boom	Length	mm (ft·in)	4,600 (15′ 1″)				Remarks
	Weight	kg (lb)	1,030 (2,270)				
Arm	Length	mm (ft·in)	1,900 (6′ 3″)	2,100 (6′ 11″)	2,500 (8′ 2″)	3,000 (9′ 10″)	
	Weight	kg (lb)	560 (1,230)	580 (1,280)	610 (1,340)	670 (1,480)	
Bucket digging force	SAE	kN	87.3[94.8]	87.3[94.8]	87.3[94.8]	87.3[94.8]	[ ]: Power Boost
		kgf	8,900[9,660]	8,900[9,660]	8,900[9,660]	8,900[9,660]	
		lbf	19,620[21,300]	19,620[21,300]	19,620[21,300]	19,620[21,300]	
	ISO	kN	102[110.8]	102[110.8]	102[110.8]	102[110.8]	
		kgf	10,400[11,290]	10,400[11,290]	10,400[11,290]	10,400[11,290]	
		lbf	22,930[24,890]	22,930[24,890]	22,930[24,890]	22,930[24,890]	
Arm crowd force	SAE	kN	76.5[83.1]	73.6[79.9]	62.8[68.2]	55.9[60.7]	
		kgf	7,800[8,470]	7,500[8,140]	6,400[6,950]	5,700[6,190]	
		lbf	17,200[18,670]	16,530[17,950]	14,110[15,320]	12,570[13,640]	
	ISO	kN	80.4[87.3]	77.5[84.1]	65.7[71.4]	57.9[62.8]	
		kgf	8,200[8,900]	7,900[8,580]	6,700[7,270]	5,900[6,410]	
		lbf	18,080[19,630]	17,420[18,910]	14,770[16,040]	13,010[14,120]	

Note: Boom weight includes arm cylinder, piping, and pin
Arm weight includes bucket cylinder, linkage, and pin

Dimensions & Working Range

R140LC-9 DIMENSIONS

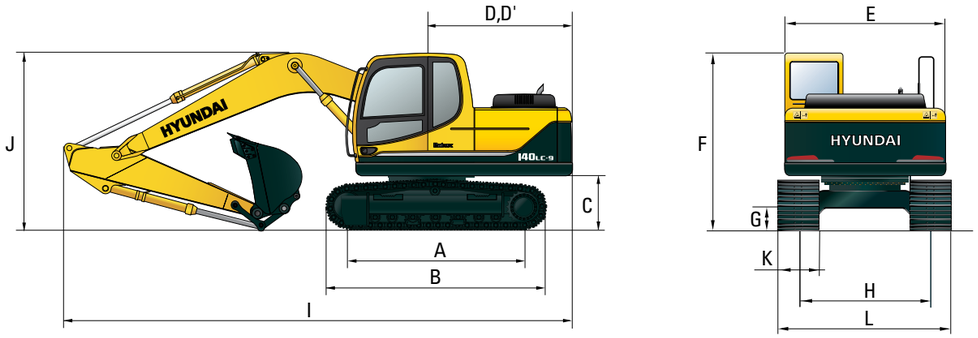

Unit : mm (ft·in)

A	Tumbler distance	3,000 (9′ 10″)
B	Overall length of crawler	3,750 (12′ 4″)
C	Ground clearance of counterweight	940 (3′ 1″)
D	Tail swing radius	2,330 (7′ 7″)
D′	Rear-end length	2,330 (7′ 7″)
E	Overall width of upperstructure	2,500 (8′ 2″)
F	Overall height of cab	2,860 (9′ 4″)
G	Min. ground clearance	440 (1′ 5″)
H	Track gauge	2,000 (6′ 7″)

	Boom length	4,600 (15′ 1″)				4,100 (13′ 5″)	
	Arm length	1,900 (6′ 3″)	2,100 (6′ 11″)	2,500 (8′ 2″)	3,000 (9′ 10″)	1,900 (6′ 3″)	2,100 (6′ 11″)
I	Overall length	7,820 (25′ 7″)	7,850 (25′ 8″)	7,820 (25′ 7″)	7,790 (25′ 6″)	7,320 (24′ 0″)	7,350 (24′ 1″)
J	Overall height of boom	2,650 (8′ 7″)	2,760 (9′ 0″)	2,780 (9′ 1″)	3,110 (10′ 2″)	2,600 (8′ 5″)	2,790 (9′ 2″)

K	Track shoe width	500 (20″)	600 (24″)	700 (28″)
L	Overall width	2,500 (8′ 2″)	2,600 (8′ 6″)	2,700 (8′ 10″)

R140LC-9 WORKING RANGE

Unit : mm (ft·in)

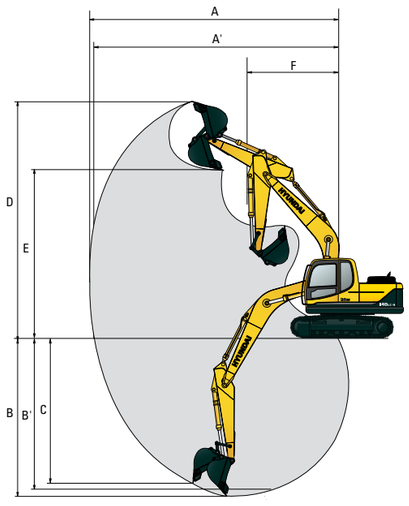

	Boom length	4,600 (15′ 1″)				4,100 (13′ 5″)	
	Arm length	1,900 (6′ 3″)	2,100 (6′ 11″)	2,500 (8′ 2″)	3,000 (9′ 10″)	1,900 (6′ 3″)	2,100 (6′ 11″)
A	Max. digging reach	7,750 (25′ 5″)	7,920 (25′ 11″)	8,330 (27′ 4″)	8,790 (28′ 10″)	7,260 (23′ 10″)	7,420 (24′ 4″)
A′	Max. digging reach on ground	7,600 (24′ 11″)	7,770 (25′ 6″)	8,180 (26′ 10″)	8,650 (28′ 4″)	7,090 (23′ 3″)	7,260 (23′ 10″)
B	Max. digging depth	4,950 (16′ 2″)	5,150 (16′ 10″)	5,550 (18′ 3″)	6,050 (19′ 10″)	4,540 (14′ 11″)	4,740 (15′ 7″)
B′	Max. digging depth (8′ level)	4,680 (15′ 4″)	4,900 (16′ 1″)	5,340 (17′ 6″)	5,870 (19′ 3″)	4,280 (14′ 1″)	4,490 (14′ 9″)
C	Max. vertical wall digging depth	4,650 (15′ 3″)	4,900 (16′ 1″)	5,330 (17′ 6″)	5,850 (19′ 2″)	4,240 (13′ 11″)	4,350 (14′ 3″)
D	Max. digging height	8,100 (26′ 7″)	8,180 (26′ 10″)	8,500 (27′ 11″)	8,780 (28′ 10″)	7,700 (25′ 3″)	7,770 (25′ 6″)
E	Max. dumping height	5,670 (18′ 7″)	5,750 (18′ 10″)	6,060 (19′ 11″)	6,330 (20′ 9″)	5,260 (17′ 3″)	5,340 (17′ 6″)
F	Min. swing radius	2,630 (8′ 8″)	2,670 (8′ 9″)	2,650 (8′ 8″)	2,680 (8′ 10″)	2,350 (7′ 9″)	2,460 (8′ 1″)

Dimensions & Working Range

R140LCD-9 DIMENSIONS

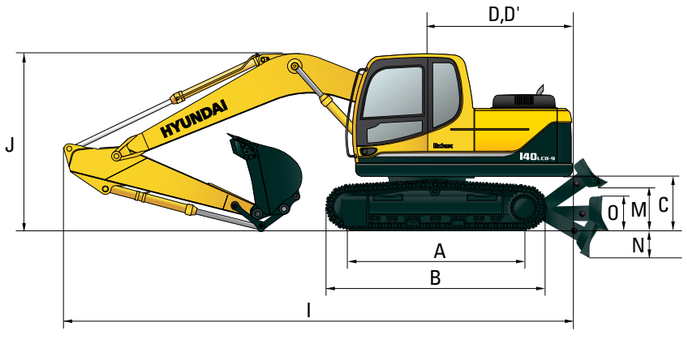

Unit : mm (ft·in)

A	Tumbler distance	3,000 (9′ 10″)
B	Overall length of crawler	3,750 (12′ 4″)
C	Ground clearance of counterweight	940 (3′ 1″)
D	Tail swing radius	2,330 (7′ 7″)
D′	Rear-end length	2,330 (7′ 7″)
E	Overall width of upperstructure	2,500 (8′ 2″)
F	Overall height of cab	2,860 (9′ 4″)
G	Min. ground clearance	440 (1′ 5″)
H	Track gauge	2,000 (6′ 7″)
M	Ground clearance of blade up	560 (1′ 8″)
N	Depth of blade down	500 (1′ 6″)
O	Height of blade	550 (1′ 8″)
	Width of blade	2,500 (8′ 2″) 2,600 (8′ 6″)

	Boom length	4,600 (15′ 1″)				4,100 (13′ 5″)	
	Arm length	1,900 (6′ 3″)	2,100 (6′ 11″)	2,500 (8′ 2″)	3,000 (9′ 10″)	1,900 (6′ 3″)	2,100 (6′ 11″)
I	Overall length	8,130 (26′ 7″)	8,160 (26′ 7″)	8,130 (26′ 7″)	8,100 (26′ 6″)	7,630 (25′ 0″)	7,660 (25′ 1″)
J	Overall height of boom	2,650 (8′ 7″)	2,760 (9′ 0″)	2,780 (9′ 1″)	3,110 (10′ 2″)	2,600 (8′ 5″)	2,790 (9′ 2″)

K	Track shoe width	500 (20″)	600 (24″)	700 (28″)
L	Overall width	2,500 (8′ 2″)	2,600 (8′ 6″)	2,700 (8′ 10″)

R140LCD-9 WORKING RANGE

Unit : mm (ft·in)

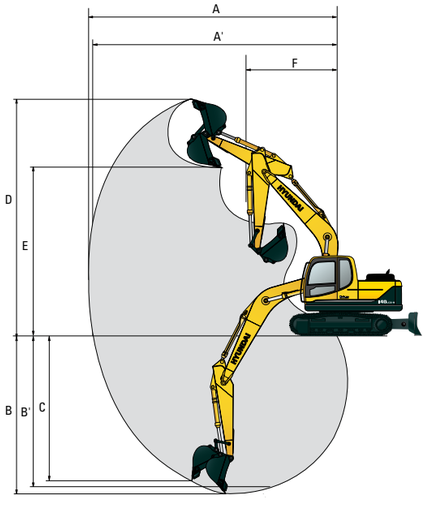

	Boom length	4,600 (15′ 1″)				4,100 (13′ 5″)	
	Arm length	1,900 (6′ 3″)	2,100 (6′ 11″)	2,500 (8′ 2″)	3,000 (9′ 10″)	1,900 (6′ 3″)	2,100 (6′ 11″)
A	Max. digging reach	7,750 (25′ 5″)	7,920 (25′ 11″)	8,330 (27′ 4″)	8,790 (28′ 10″)	7,260 (23′ 10″)	7,420 (24′ 4″)
A′	Max. digging reach on ground	7,600 (24′ 11″)	7,770 (25′ 6″)	8,180 (26′ 10″)	8,650 (28′ 4″)	7,090 (23′ 3″)	7,260 (23′ 10″)
B	Max. digging depth	4,950 (16′ 2″)	5,150 (16′ 10″)	5,550 (18′ 3″)	6,050 (19′ 10″)	4,540 (14′ 11″)	4,740 (15′ 7″)
B′	Max. digging depth (8′ level)	4,680 (15′ 4″)	4,900 (16′ 1″)	5,340 (17′ 6″)	5,870 (19′ 3″)	4,280 (14′ 1″)	4,490 (14′ 9″)
C	Max. vertical wall digging depth	4,650 (15′ 3″)	4,900 (16′ 1″)	5,330 (17′ 6″)	5,850 (19′ 2″)	4,240 (13′ 11″)	4,350 (14′ 3″)
D	Max. digging height	8,100 (26′ 7″)	8,180 (26′ 10″)	8,500 (27′ 11″)	8,780 (28′ 10″)	7,700 (25′ 3″)	7,770 (25′ 6″)
E	Max. dumping height	5,670 (18′ 7″)	5,750 (18′ 10″)	6,060 (19′ 11″)	6,330 (20′ 9″)	5,260 (17′ 3″)	5,340 (17′ 6″)
F	Min. swing radius	2,630 (8′ 8″)	2,670 (8′ 9″)	2,650 (8′ 8″)	2,680 (8′ 10″)	2,350 (7′ 9″)	2,460 (8′ 1″)

Dimensions & Working Range

R140LCM-9 DIMENSIONS

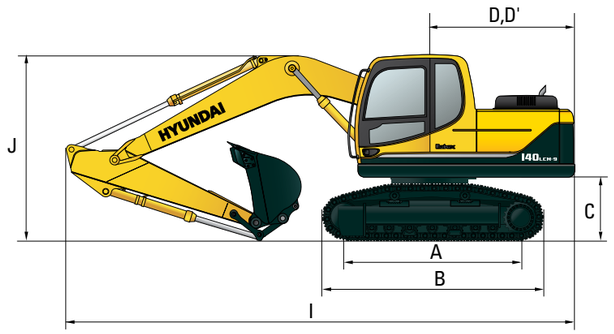

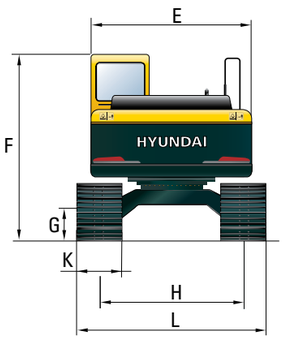

Unit : mm (ft·in)

A	Tumbler distance	3,030 (9′ 11″)
B	Overall length of crawler	3,860 (12′ 4″)
C	Ground clearance of counterweight	1,200 (3′ 9″)
D	Tail swing radius	2,330 (7′ 7″)
D′	Rear-end length	2,330 (7′ 7″)
E	Overall width of upperstructure	2,500 (8′ 2″)
F	Overall height of cab	3,120 (10′ 2″)
G	Min. ground clearance	600 (2′ 0″)
H	Track gauge	2,040 (6′ 8″)

	Boom length	4,600 (15′ 1″)			
	Arm length	1,900 (6′ 3″)	2,100 (6′ 11″)	2,500 (8′ 2″)	3,000 (9′ 10″)
I	Overall length	7,770 (25′ 5″)	7,830 (25′ 7″)	7,790 (25′ 6″)	7,860 (25′ 8″)
J	Overall height of boom	2,750 (9′ 0″)	2,860 (9′ 4″)	2,830 (9′ 3″)	3,120 (10′ 2″)

K	Track shoe width	Type	Double grouser	Triple grouser	Single grouser
		Width	710 (28″)	800 (32″)	960 (38″)
L	Overall width		2,750 (9′ 0″)	2,840 (9′ 4″)	3,000 (9′ 10″)

R140LCM-9 WORKING RANGE

Unit : mm (ft·in)

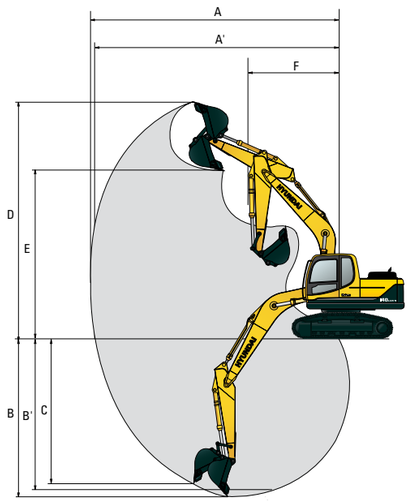

	Boom length	4,600 (15′ 1″)			
	Arm length	1,900 (6′ 3″)	2,100 (6′ 11″)	2,500 (8′ 2″)	3,000 (9′ 10″)
A	Max. digging reach	7,750 (25′ 5″)	7,920 (25′ 11″)	8,330 (27′ 4″)	8,790 (28′ 10″)
A′	Max. digging reach on ground	7,540 (24′ 9″)	7,710 (25′ 4″)	8,110 (26′ 7″)	8,580 (28′ 2″)
B	Max. digging depth	4,690 (15′ 5″)	4,890 (16′ 1″)	5,290 (17′ 4″)	5,790 (19′ 0″)
B′	Max. digging depth (8' level)	4,420 (14′ 6″)	4,640 (15′ 3″)	5,080 (16′ 8″)	5,610 (18′ 5″)
C	Max. vertical wall digging depth	4,390 (14′ 5″)	4,640 (15′ 3″)	5,070 (16′ 8″)	5,590 (18′ 4″)
D	Max. digging height	8,360 (27′ 5″)	8,440 (27′ 8″)	8,760 (28′ 9″)	9,040 (29′ 7″)
E	Max. dumping height	5,930 (19′ 5″)	6,010 (19′ 8″)	6,320 (20′ 9″)	6,590 (21′ 7″)
F	Min. swing radius	2,630 (8′ 8″)	2,670 (8′ 9″)	2,650 (8′ 8″)	2,680 (8′ 10″)

Dimensions & Working Range

R140LC-9 ADJUSTABLE BOOM DIMENSIONS

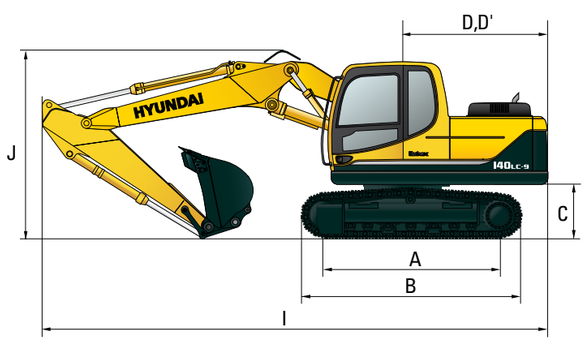

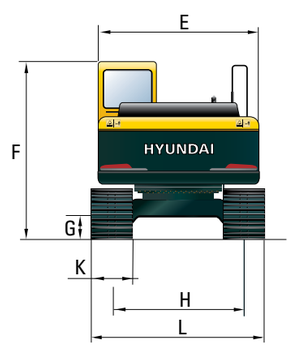

Unit : mm (ft·in)

A	Tumbler distance	3,000 (9′ 10″)
B	Overall length of crawler	3,750 (12′ 4″)
C	Ground clearance of counterweight	940 (3′ 1″)
D	Tail swing radius	2,330 (7′ 7″)
D′	Rear-end length	2,330 (7′ 7″)
E	Overall width of upperstructure	2,500 (8′ 2″)
F	Overall height of cab	2,870 (9′ 4″)
G	Min. ground clearance	440 (1′ 5″)
H	Track gauge	2,000 (6′ 7″)

	Boom length	4,900 (16′ 1″), Adjustable boom		
	Arm length	1,900 (6′ 3″)	2,100 (6′ 11″)	2500 (8′ 2″)
I	Overall length	8,160 (26′ 8″)	8,170 (26′ 8″)	8,150 (26′ 8″)
J	Overall height of boom	2,830 (9′ 3″)	2,940 (9′ 6″)	2,960 (9′ 7″)

K	Track shoe width	500 (20″)	600 (24″)	700 (28″)
L	Overall width	2,500 (8′ 2″)	2,600 (8′ 6″)	2,700 (8′ 10″)

R140LC-9 ADJUSTABLE BOOM WORKING RANGE

Unit : mm (ft·in)

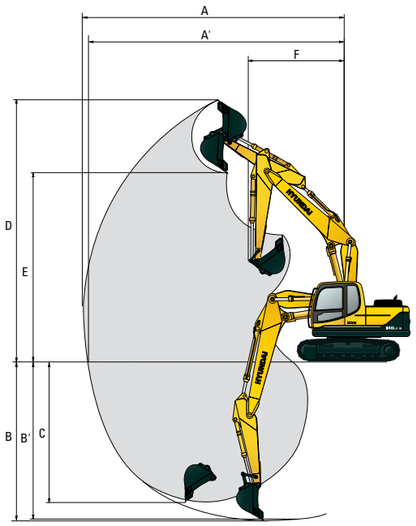

	Boom length	4,900 (16′ 1″), Adjustable boom		
	Arm length	1,900 (6′ 3″)	2,100 (6′ 11″)	2,500 (8′ 2″)
A	Max. digging reach	8,140 (26′ 8″)	8,320 (27′ 4″)	8,720 (28′ 7″)
A′	Max. digging reach on ground	8,000 (26′ 3″)	8,180 (26′ 10″)	8,590 (28′ 2″)
B	Max. digging depth	5,110 (16′ 9″)	5,310 (17′ 5″)	5,710 (18′ 9″)
B′	Max. digging depth (8' level)	5,000 (16′ 5″)	5,190 (17′ 0″)	5,610 (18′ 5″)
C	Max. vertical wall digging depth	4,490 (14′ 9″)	4,660 (15′ 3″)	5,120 (16′ 10″)
D	Max. digging height	8,810 (28′ 11″)	8,890 (29′ 2″)	9,270 (30′ 5″)
E	Max. dumping height	6,330 (20′ 9″)	6,410 (21′ 0″)	6,780 (22′ 3″)
F	Min. swing radius	2,670 (8′ 9″)	2,830 (9′ 3″)	2,690 (8′ 10″)

Lifting Capacity

R140LC-9

Rating over-front Rating over-side or 360 degree

Boom : 4.6 m (15′ 1″) / Arm : 1.9 m (6′ 3″) / Bucket : 0.58 m³ (0.76 yd³) SAE heaped / Shoe : 600mm(24″) triple grouser

Load point height m (ft)		Load radius								At max. reach		
		1.5 m (5 ft)		3.0 m (10 ft)		4.5 m (15 ft)		6.0 m (20 ft)		Capacity		Reach
												m (ft)
6.0 m	kg					*3340	*3340			*3170	2350	5.95
(20 ft)	lb					*7360	*7360			*6990	5180	(19.5)
4.5 m	kg					*3550	*3550			2820	1760	6.90
(15 ft)	lb					*7830	*7830			6220	3880	(22.6)
3.0m	kg			*6270	*6270	*4440	3510	3480	2170	2480	1520	7.37
(10 ft)	lb			*13820	*13820	*9790	7740	7670	4780	5470	3350	(24.2)
1.5 m	kg			*8490	6040	5400	3270	3380	2080	2390	1450	7.45
(5 ft)	lb			*18720	13320	11900	7210	7450	4590	5270	3200	(24.4)
Ground	kg			*8230	5790	5200	3100	3300	2000	2510	1520	7.17
Line	lb			*18140	12760	11460	6830	7280	4410	5530	3350	(23.5)
(-1.5 m	kg	*6670	*6670	*9690	5800	5140	3050			2960	1810	6.48
(-5 ft)	lb	*14700	*14700	*21360	12790	11330	6720			6530	3990	(21.3)
(-3.0 m	kg	*10970	*10970	*8330	5930	5220	3110			*3690	2670	5.15
(-10 ft)	lb	*24180	*24180	*18360	13070	11510	6860			*8140	5890	(16.9)

Boom : 4.6 m (15′ 1″) / Arm : 2.5 m (8′ 2″) / Bucket : 0.58 m³ (0.76 yd³) SAE heaped / Shoe : 600mm(24″) triple grouser

Load point height m (ft)		Load radius								At max. reach		
		1.5 m (5 ft)		3.0 m (10 ft)		4.5 m (15 ft)		6.0 m (20 ft)		Capacity		Reach
												m (ft)
6.0 m	kg									*2810	1920	6.69
(20 ft)	lb									*6190	4230	(21.9)
4.5 m	kg							*2770	2270	2440	1500	7.53
(15 ft)	lb							*6110	5000	5380	3310	(24.7)
3.0m	kg			*4930	*4930	*3830	3570	*3380	2190	2170	1310	7.95
(10 ft)	lb			*10870	*10870	*8440	7870	*7450	4830	4780	2890	(26.1)
1.5 m	kg			*8030	6240	*5010	3300	3380	2070	2100	1250	8.03
(5 ft)	lb			*17700	13760	*11050	7280	7450	4560	4630	2760	(26.3)
Ground	kg			*8780	5800	5200	3090	3270	1970	2180	1300	7.77
Line	lb			*19360	12790	11460	6810	7210	4340	4810	2870	(25.5)
-1.5 m	kg	*5740	*5740	*9910	5700	5080	2990	3220	1920	2500	1500	7.15
(-5 ft)	lb	*12650	*12650	*21850	12570	11200	6590	7100	4230	5510	3310	(23.5)
-3.0 m	kg	*8760	*8760	*9040	5770	5100	3000			3340	2030	6.01
(-10 ft)	lb	*19310	*19310	*19930	12720	11240	6610			7360	4480	(19.7)
-4.5 m	kg			*6590	6030							
(-15 ft)	lb			*14530	13290							

Boom : 4.6 m (15′ 1″) / Arm : 3.0 m (9′ 10″) / Bucket : 0.58 m³ (0.76 yd³) SAE heaped / Shoe : 600mm(24″) triple grouser

Load point height m (ft)		Load radius										At max. reach		
		1.5 m (5 ft)		3.0 m (10 ft)		4.5 m (15 ft)		6.0 m (20 ft)		7.5 m (25 ft)		Capacity		Reach
														m (ft)
6.0 m	kg							*1880	*1880			*2540	1650	7.25
(20 ft)	lb							*4140	*4140			*5600	3640	(23.8)
4.5 m	kg							*2570	2310			2180	1320	8.02
(15 ft)	lb							*5670	5090			4810	2910	(26.3)
3.0m	kg					*3280	*3280	*3020	2210	*1660	1430	1960	1160	8.41
(10 ft)	lb					*7230	*7230	*6660	4870	*3660	3150	4320	2560	(27.6)
1.5 m	kg			*6980	6440	*4540	3350	3400	2080	*2190	1380	1890	1100	8.49
(5 ft)	lb			*15390	14200	*10010	7390	7500	4590	*4830	3040	4170	2430	(27.9)
Ground	kg			*9240	5850	5210	3100	3260	1960	*2120	1330	1960	1140	8.25
Line	lb			*20370	12900	11490	6830	7190	4320	*4670	2930	4320	2510	(27.1)
-1.5 m	kg	*5290	*5290	*9910	5650	5060	2960	3180	1890			2200	1290	7.67
(-5 ft)	lb	*11660	*11660	*21850	12460	11160	6530	7010	4170			4850	2840	(25.2)
-3.0 m	kg	*7720	*7720	*9440	5670	5030	2940	3180	1880			2800	1680	6.64
(-10 ft)	lb	*17020	*17020	*20810	12500	11090	6480	7010	4140			6170	3700	(21.8)
-4.5 m	kg	*11300	*11300	*7670	5850	*4890	3050							
(-15 ft)	lb	*24910	*24910	*16910	12900	*10780	6720							

1. Lifting capacity is based on SAE J1097, ISO 10567.
2. Lifting capacity of the Robex Series does not exceed 75% of the tipping load with the machine on firm, level ground or 87% of full hydraulic capacity.
3. The load point is a hook located on the back of the bucket.
4. (*) indicates the load limited by hydraulic capacity.

Lifting Capacity

R140LCD-9

Rating over-front Rating over-side or 360 degree

Boom : 4.6 m (15′ 1″) / Arm : 1.9 m (6′ 3″) / Bucket : 0.58 m³ (0.76 yd³) SAE heaped / Shoe : 600mm(24″) triple grouser

Load point height m (ft)		Load radius								At max. reach		
		1.5 m (5 ft)		3.0 m (10 ft)		4.5 m (15 ft)		6.0 m (20 ft)		Capacity		Reach
												m (ft)
6.0 m	kg					*3340	*3340			*3170	2490	5.95
(20 ft)	lb					*7360	*7360			*6990	5490	(19.5)
4.5 m	kg					*3550	*3550			3070	1870	6.90
(15 ft)	lb					*7830	*7830			6770	4120	(22.6)
3.0m	kg			*6270	*6270	*4440	3700	3780	2300	2710	1620	7.37
(10 ft)	lb			*13820	*13820	*9790	8160	8330	5070	5970	3570	(24.2)
1.5 m	kg			*8490	6380	*5520	3460	3680	2210	2610	1550	7.45
(5 ft)	lb			*18720	14070	*12170	7630	8110	4870	5750	3420	(24.4)
Ground	kg			*8230	6130	5650	3290	3590	2130	2750	1630	7.17
Line	lb			*18140	13510	12460	7250	7910	4700	6060	3590	(23.5)
(-1.5 m	kg	*6670	*6670	*9690	6140	5590	3240			3230	1930	6.48
(-5 ft)	lb	*14700	*14700	*21360	13540	12320	7140			7120	4250	(21.3)
(-3.0 m	kg	*10970	*10970	*8330	6270	*5520	3300			*3690	2830	5.15
(-10 ft)	lb	*24180	*24180	*18360	13820	*12170	7280			*8140	6240	(16.9)

Boom : 4.6 m (15′ 1″) / Arm : 2.5 m (8′ 2″) / Bucket : 0.58 m³ (0.76 yd³) SAE heaped / Shoe : 600mm(24″) triple grouser

Load point height m (ft)		Load radius								At max. reach		
		1.5 m (5 ft)		3.0 m (10 ft)		4.5 m (15 ft)		6.0 m (20 ft)		Capacity		Reach
												m (ft)
6.0 m	kg									*2810	2040	6.69
(20 ft)	lb									*6190	4500	(21.9)
4.5 m	kg							*2770	2410	2660	1600	7.53
(15 ft)	lb							*6110	5310	5860	3530	(24.7)
3.0m	kg			*4930	*4930	*3830	3770	*3380	2320	2380	1400	7.95
(10 ft)	lb			*10870	*10870	*8440	8310	*7450	5110	5250	3090	(26.1)
1.5 m	kg			*8030	6580	*5010	3490	3680	2210	2300	1340	8.03
(5 ft)	lb			*17700	14510	*11050	7690	8110	4870	5070	2950	(26.3)
Ground	kg			*8780	6140	5640	3280	3570	2110	2400	1400	7.77
Line	lb			*19360	13540	12430	7230	7870	4650	5290	3090	(25.5)
-1.5 m	kg	*5740	*5740	*9910	6040	5530	3180	3510	2060	2730	1610	7.15
(-5 ft)	lb	*12650	*12650	*21850	13320	12190	7010	7740	4540	6020	3550	(23.5)
-3.0 m	kg	*8760	*8760	*9040	6110	5550	3200			*3540	2170	6.01
(-10 ft)	lb	*19310	*19310	*19930	13470	12240	7050			*7800	4780	(19.7)
-4.5 m	kg			*6590	6370							
(-15 ft)	lb			*14530	14040							

Boom : 4.6 m (15′ 1″) / Arm : 3.0 m (9′ 10″) / Bucket : 0.58 m³ (0.76 yd³) SAE heaped / Shoe : 600mm(24″) triple grouser

Load point height m (ft)		Load radius										At max. reach		
		1.5 m (5 ft)		3.0 m (10 ft)		4.5 m (15 ft)		6.0 m (20 ft)		7.5 m (25 ft)		Capacity		Reach
														m (ft)
6.0 m	kg							*1880	*1880			*2540	1760	7.25
(20 ft)	lb							*4140	*4140			*5600	3880	(23.8)
4.5 m	kg							*2570	2440			2380	1410	8.02
(15 ft)	lb							*5670	5380			5250	3110	(26.3)
3.0m	kg					*3280	*3280	*3020	2350	*1660	1540	2150	1250	8.41
(10 ft)	lb					*7230	*7230	*6660	5180	*3660	3400	4740	2760	(27.6)
1.5 m	kg			*6980	6780	*4540	3540	*3610	2220	*2190	1480	2080	1190	8.49
(5 ft)	lb			*15390	14950	*10010	7800	*7960	4890	*4830	3260	4590	2620	(27.9)
Ground	kg			*9240	6190	*5630	3290	3560	2090	*2120	1480	2150	1230	8.25
Line	lb			*20370	13650	*12410	7250	7850	4610	*4670	3150	4740	2710	(27.1)
-1.5 m	kg	*5290	*5290	*9910	5990	5500	3150	3480	2020			2410	1390	7.67
(-5 ft)	lb	*11660	*11660	*21850	13210	12130	6940	7670	4450			5310	3060	(25.2)
-3.0 m	kg	*7720	*7720	*9440	6010	5480	3130	3480	2020			3060	1800	6.64
(-10 ft)	lb	*17020	*17020	*20810	13250	12080	6900	7670	4450			6750	3970	(21.8)
-4.5 m	kg	*11300	*11300	*7670	6190	*4890	3240							
(-15 ft)	lb	*24910	*24910	*16910	13650	*10780	7140							

1. Lifting capacity is based on SAE J1097, ISO 10567.
2. Lifting capacity of the Robex Series does not exceed 75% of the tipping load with the machine on firm, level ground or 87% of full hydraulic capacity.
3. The load point is a hook located on the back of the bucket.
4. (*) indicates the load limited by hydraulic capacity.

Lifting Capacity

R140LCM-9

Rating over-front Rating over-side or 360 degree

Boom : 4.6 m (15' 1") / Arm : 1.9 m (6' 3") / Bucket : 0.58 m³ (0.76 yd³) SAE heaped / Shoe : 800mm(32") triple grouser

Load point height m (ft)		Load radius								At max. reach		
		1.5 m (5 ft)		3.0 m (10 ft)		4.5 m (15 ft)		6.0 m (20 ft)		Capacity		Reach
												m (ft)
6.0 m	kg					*3310	*3310			*3180	2610	6.16
(20 ft)	lb					*7300	*7300			*7010	5750	(20.2)
4.5 m	kg					*3670	*3670	*2830	2640	3200	2050	7.01
(15 ft)	lb					*8090	*8090	*6240	5820	7050	4520	(23.0)
3.0m	kg			*6820	*6820	*4620	4090	*3860	2580	2880	1820	7.41
(10 ft)	lb			*15040	*15040	*10190	9020	*8510	5690	6350	4010	(24.3)
1.5 m	kg			*7800	7120	*5680	3850	3930	2480	2820	1770	7.43
(5 ft)	lb			*17200	15700	*12520	8490	8660	5470	6220	3900	(24.4)
Ground	kg			*8700	6940	6050	3700	3850	2410	3020	1890	7.09
Line	lb			*19180	15300	13340	8160	8490	5310	6660	4170	(23.3)
(-1.5 m	kg	*7330	*7330	*9540	6960	6010	3670			3630	2290	6.31
(-5 ft)	lb	*16160	*16160	*21030	15340	13250	8090			8000	5050	(20.7)
(-3.0 m	kg			*7950	7130	*5200	3760					
(-10 ft)	lb			*17530	15720	*11460	8290					

Boom : 4.6 m (15' 1") / Arm : 2.5 m (8' 2") / Bucket : 0.58 m³ (0.76 yd³) SAE heaped / Shoe : 800mm(32") triple grouser

Load point height m (ft)		Load radius								At max. reach		
		1.5 m (5 ft)		3.0 m (10 ft)		4.5 m (15 ft)		6.0 m (20 ft)		Capacity		Reach
												m (ft)
6.0 m	kg									*2830	2180	6.87
(20 ft)	lb									*6240	4810	(22.5)
4.5 m	kg					*3040	*3040	*2930	2690	2790	1770	7.63
(15 ft)	lb					*6700	*6700	*6460	5930	6150	3900	(25.0)
3.0m	kg			*5460	*5460	*4030	*4030	*3470	2590	2540	1590	7.99
(10 ft)	lb			*12040	*12040	*8880	*8880	*7650	5710	5600	3510	(26.2)
1.5 m	kg			*8460	7290	*5200	3880	3930	2480	2490	1540	8.01
(5 ft)	lb			*18650	16070	*11460	8550	8660	5470	5490	3400	(26.3)
Ground	kg	*3600	*3600	*8880	6920	6030	3680	3820	2380	2630	1630	7.70
Line	lb	*7940	*7940	*19580	15260	13290	8110	8420	5250	5800	3590	(25.3)
(-1.5 m	kg	*6200	*6200	*9840	6850	5940	3600	3780	2340	3050	1900	7.00
(-5 ft)	lb	*13670	*13670	*21690	15100	13100	7940	8330	5160	6720	4190	(23.0)
(-3.0 m	kg	*9390	*9390	*8770	6960	*5760	3640			*3520	2650	5.74
(-10 ft)	lb	*20700	*20700	*19330	15340	*12700	8020			*7760	5840	(18.8)

Boom : 4.6 m (15' 1") / Arm : 3.0 m (9' 10") / Bucket : 0.58 m³ (0.76 yd³) SAE heaped / Shoe : 800mm(32") triple grouser

Load point height m (ft)		Load radius										At max. reach		
		1.5 m (5 ft)		3.0 m (10 ft)		4.5 m (15 ft)		6.0 m (20 ft)		7.5 m (25 ft)		Capacity		Reach
														m (ft)
6.0 m	kg							*2060	*2060			*2550	1900	7.41
(20 ft)	lb							*4540	*4540			*5620	4190	(24.3)
4.5 m	kg							*2660	*2660			2510	1570	8.11
(15 ft)	lb							*5860	*5860			5530	3460	(26.6)
3.0m	kg					*3480	*3480	*3120	2610	*1790	1740	2300	1420	8.45
(10 ft)	lb					*7670	*7670	*6880	5750	*3950	3840	5070	3130	(27.7)
1.5 m	kg			*7490	7480	*4750	3920	*3710	2480	*2230	1690	2250	1380	8.47
(5 ft)	lb			*16510	16490	*10470	8640	*8180	5470	*4920	3730	4960	3040	(27.8)
Ground	kg	*3650	*3650	*9450	6950	*5770	3680	3810	2360	*1990	1640	2360	1440	8.18
Line	lb	*8050	*8050	*20830	15320	*12720	8110	8400	5200	*4390	3620	5200	3170	(26.8)
-1.5 m	kg	*5660	*5660	*9900	6800	5900	3560	3740	2300			2680	1650	7.53
(-5 ft)	lb	*12480	*12480	*21830	14990	13010	7850	8250	5070			5910	3640	(24.7)
-3.0 m	kg	*8220	*8220	*9250	6840	5900	3560	3760	2320			*3380	2180	6.40
(-10 ft)	lb	*18120	*18120	*20390	15080	13010	7850	8290	5110			*7450	4810	(21.0)
-4.5 m	kg			*7160	7060	*4420	3710							
(-15 ft)	lb			*15790	15560	*9740	8180							

1. Lifting capacity is based on SAE J1097, ISO 10567.
2. Lifting capacity of the Robex Series does not exceed 75% of the tipping load with the machine on firm, level ground or 87% of full hydraulic capacity.
3. The load point is a hook located on the back of the bucket.
4. (*) indicates the load limited by hydraulic capacity.

Lifting Capacity

R140LC-9 ADJUSTABLE BOOM

Rating over-front Rating over-side or 360 degree

Boom : 4.9 m (16' 1") / Arm : 1.9 m (6' 3") / Bucket : 0.58 m³ (0.76 yd³) SAE heaped / Shoe : 600mm(24") triple grouser

Load point height m (ft)		Load radius						At max. reach		
		3.0 m (10 ft)		4.5 m (15 ft)		6.0 m (20 ft)		Capacity		Reach
										m (ft)
6.0 m	kg			*2900	*2900			*2880	2010	6.45
(20 ft)	lb			*6390	*6390			*6350	4430	(21.2)
4.5 m	kg			*3280	*3280	*3150	2220	2530	1540	7.33
(15 ft)	lb			*7230	*7230	*6940	4890	5580	3400	(24.0)
3.0m	kg	*6420	*6420	*4230	3440	3470	2130	2240	1340	7.76
(10 ft)	lb	*14150	*14150	*9330	7580	7650	4700	4940	2950	(25.5)
1.5 m	kg			5310	3160	3340	2020	2170	1280	7.84
(5 ft)	lb			11710	6970	7360	4450	4780	2820	(25.7)
Ground	kg	*5430	*5430	5110	2980	3240	1930	2270	1340	7.58
Line	lb	*11970	*11970	11270	6570	7140	4250	5000	2950	(24.9)
(-1.5 m	kg	*9210	5620	5050	2940	3220	1900	2630	1570	6.93
(-5 ft)	lb	*20300	12390	11130	6480	7100	4190	5800	3460	(22.7)
(-3.0 m	kg	*8450	5780	5130	3000					
(-10 ft)	lb	*18630	12740	11310	6610					

Boom : 4.9 m (16' 1") / Arm : 2.1 m (6' 11") / Bucket : 0.58 m³ (0.76 yd³) SAE heaped / Shoe : 600mm(24") triple grouser

Load point height m (ft)		Load radius						At max. reach		
		3.0 m (10 ft)		4.5 m (15 ft)		6.0 m (20 ft)		Capacity		Reach
										m (ft)
6.0 m	kg			*2690	*2690			*2760	1900	6.68
(20 ft)	lb			*5930	*5930			*6080	4190	(21.9)
4.5 m	kg			*3080	*3080	*2990	2230	2420	1470	7.52
(15 ft)	lb			*6790	*6790	*6590	4920	5340	3240	(24.7)
3.0m	kg	*5930	*5930	*4030	3460	*3360	2140	2150	1280	7.94
(10 ft)	lb	*13070	*13070	*8880	7630	*7410	4720	4740	2820	(26.0)
1.5 m	kg			*5140	3160	3340	2010	2080	1220	8.02
(5 ft)	lb			*11330	6970	7360	4430	4590	2690	(26.3)
Ground	kg	*5690	5540	5090	2960	3230	1910	2170	1270	7.77
Line	lb	*12540	12210	11220	6530	7120	4210	4780	2800	(25.5)
(-1.5 m	kg	*8930	5560	5020	2900	3190	1870	2490	1470	7.14
(-5 ft)	lb	*19690	12260	11070	6390	7030	4120	5490	3240	(23.4)
(-3.0 m	kg	*8650	5690	5070	2950					
(-10 ft)	lb	*19070	12540	11180	6500					

Boom : 4.9 m (16' 1") / Arm : 2.5 m (8' 2") / Bucket : 0.58 m³ (0.76 yd³) SAE heaped / Shoe : 600mm(24") triple grouser

Load point height m (ft)		Load radius										At max. reach		
		1.5 m (5 ft)		3.0 m (10 ft)		4.5 m (15 ft)		6.0 m (20 ft)		7.5 m (25 ft)		Capacity		Reach
														m (ft)
6.0 m	kg							*2250	*2250			*2570	1660	7.18
(20 ft)	lb							*4960	*4960			*5670	3660	(23.6)
4.5 m	kg					*2700	*2700	*2710	2270			2190	1310	7.96
(15 ft)	lb					*5950	*5950	*5970	5000			4830	2890	(26.1)
3.0m	kg			*5070	*5070	*3660	3520	*3120	2160	*1900	1400	1970	1150	8.35
(10 ft)	lb			*11180	*11180	*8070	7760	*6880	4760	*4190	3090	4340	2540	(27.4)
1.5 m	kg			*7220	5960	*4830	3200	3350	2020	2300	1350	1900	1100	8.43
(5 ft)	lb			*15920	13140	*10650	7050	7390	4450	5070	2980	4190	2430	(27.7)
Ground	kg			*6040	5560	5100	2970	3220	1900	2250	1310	1980	1140	8.19
Line	lb			*13320	12260	11240	6550	7100	4190	4960	2890	4370	2510	(26.9)
-1.5 m	kg	*4680	*4680	*8220	5510	4990	2880	3160	1850			2230	1300	7.60
(-5 ft)	lb	*10320	*10320	*18120	12150	11000	6350	6970	4080			4920	2870	(24.9)
-3.0 m	kg			*9010	5600	5010	2900	3190	1870					
(-10 ft)	lb			*19860	12350	11050	6390	7030	4120					

1. Lifting capacity is based on SAE J1097, ISO 10567.
2. Lifting capacity of the Robex Series does not exceed 75% of the tipping load with the machine on firm, level ground or 87% of full hydraulic capacity.
3. The load point is a hook located on the back of the bucket.
4. (*) indicates the load limited by hydraulic capacity.