1234 1907.2.23 8:34 AM 페이지 19

FLEXIBLE DISC

COUPLING

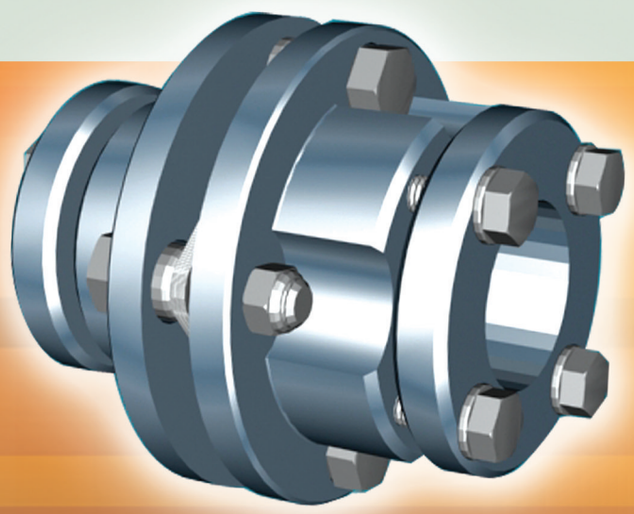

DISC & MICRO COUPLING

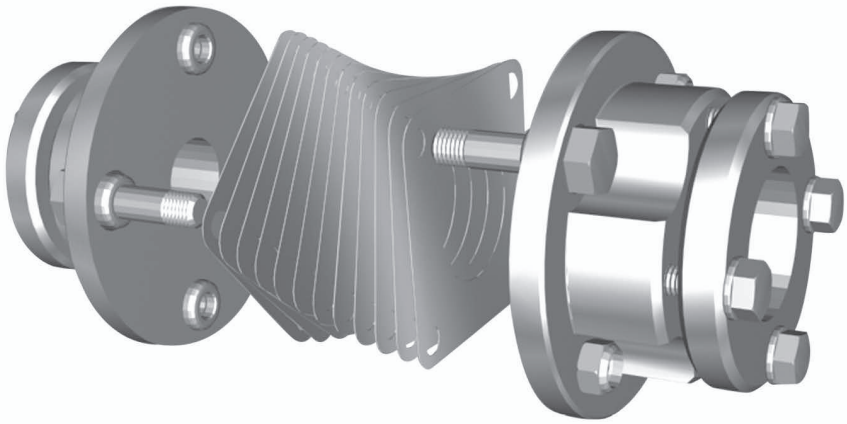

■ Distinctive Features

1. In all areas of industry, the demand for machinery and equipment of ever higher precision and efficiency is increasing daily, couplings, serving as important power transmission parts, are also expected to exhibit higher quality and reliability.

2. Lubricating oil is unnecessary because the *Jac* DISK COUPLING has no sliding, frictional, or moving parts. Therefore, there is no friction or noise, and energy loss is low, with no dirty oil to cope with.

3. Higher torsional and no backlash.
   For the equipment such as machine tools with numerical controllers, indexing systems, and printing machines requiring accruate shaft rotation and phase control, *Jac* DISK COUPLINGS are best suited because of their high torsional stiffness.

4. The key point of the *Jac* DISK COUPLING design is the laminated straight sided flex pack, an assembly of thin stainless steel elements.
   Please refer to the figure above.

5. When properly installed and if initial conditions remain unchanged, *Jac* DISK COUPLING has an unlimited service life. Required maintenance consists of a visual inspection of the condition of the element (flexible plate) and of the bolts and nuts when operation is stopped.
   Should the element be damaged due to overload or accident, a fail-safe mechanism transmitting rotation via washers becomes operational.

6. Flexible couplings prevent problems by absorbing shaft misalignment while transmitting torque; this puts an opposing load on the shaft.
   With *Jac* DISK COUPLING however, this load is much lower than that with other types of couplings.

7. Load stress on *Jac* DISK COUPLING is maintained at very low level, except in special cases. Therefore the service life of these couplings is practically unlimited when operated within the acceptable range of allowable misalignment. Couplings can be mounted and unmounted quickly and easily due to their compactness and small number of parts. Excellent reassembly characteristics provide superior speed.

■ Type of Flexible Elements

Usage \ Type of disc-plate		 Max.angular misalignment:1° Allowable torque: 3.4-650kg · m	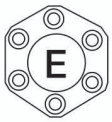 Max.angular misalignment:0.7° Allowable torque: 58-13.070kg · m	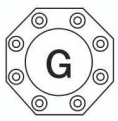 Max.angular misalignment:0.5° Allowable torque: 392-18,150kg · m	 Max.angular misalignment:0.35° Allowable torque: 1,379-26,130kg · m	 Max.angular misalignment:0.25° Allowable torque: 1,669-31,936kg · m	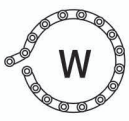 Number of bolts:10-20.Number is determined based on service conditions.Consult us for further information.. Max.torque:200×10³ kg · m
single		A3	E3	-	-	-	-
double disc-flex	short space	AX	-	-	-	-	-
	standard space	A4	E4	G4	S4	U4	W4
	custom space	AB	EB	GB	SB	UB	WB
floating disc-flex	horizontal	A5	E5	G5	S5	U5	W5
	vertical	A7	E7	G7	S7	U7	W7

■ Designation

Jac - □ □ □ - □ / □ - □

→ Length of 'SHAFT ENDS' (only space and Floating Type use)

→ Bore size and the method of fitting with shaft on the driven shaft

→ Bore size and the method of fitting with shaft on the driving shaft

EX) 20K : Bore size Ø20, use KEY WAY.

20S25 : Bore size Ø20, use SPAN RING(POWER LOCK)

16T : Bore size Ø16, TAPER 1/10

→ Type of HUB(N : standard HUB, P, Z : special HUB, K : P+Z HUB ←See dimensions)

HUBS are available in several different types for various applications.

→ Size No.

→ Model No.

■ Design features of 4-bolt coupling

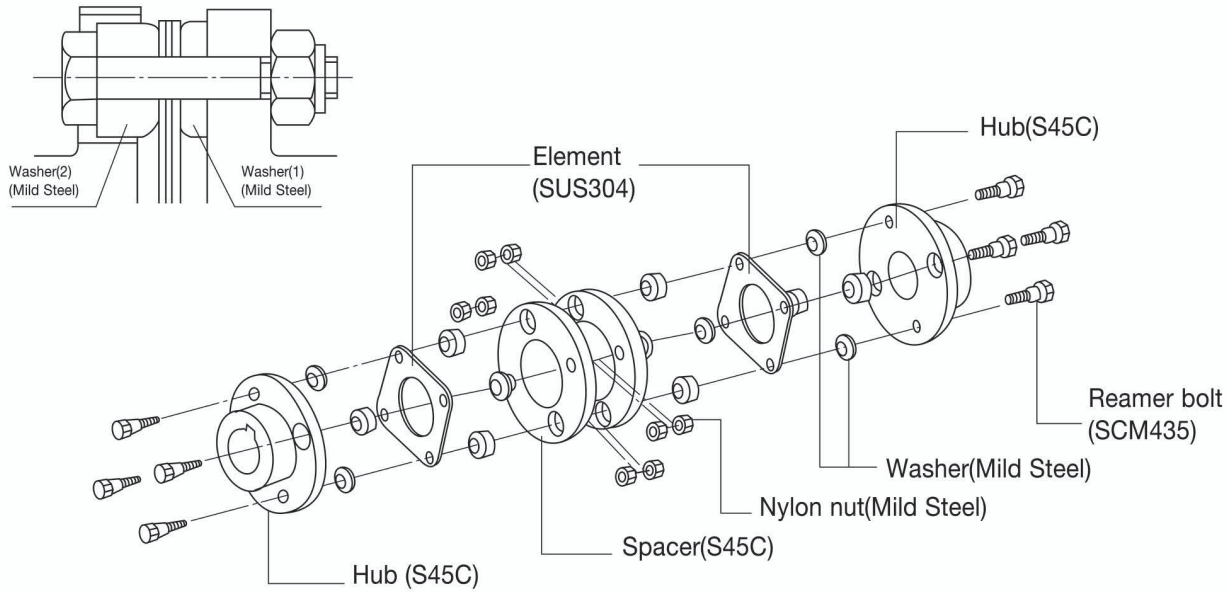

Standard materials are shown in parentheses.

■ Design features of 6-12-bolt coupling

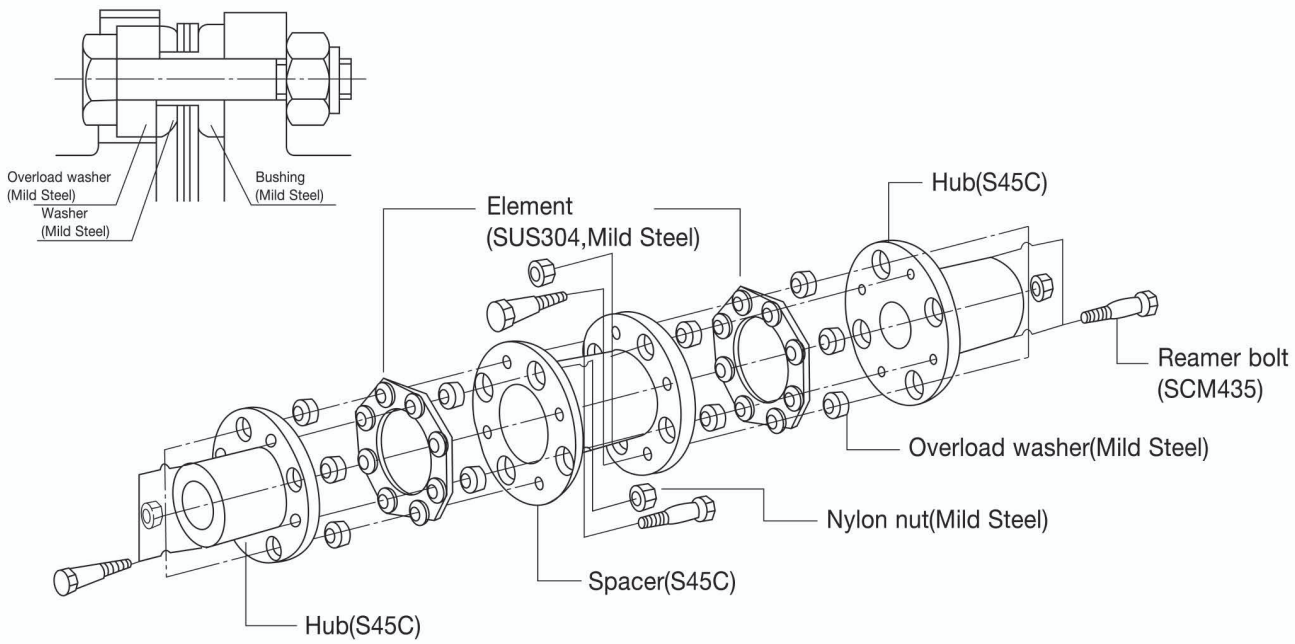

Standard materials are shown in parentheses.

■ PERFORMANCE

DISPLACEMENT

Allowances for axial and parallel displacement of coupling depend on the number of bolts in the flexible element and operating speed. Axial and parallel displacement are in inverse proportion in other words, when one increases, the other decreases. Therefore,the two sholuld be taken into consideration concurrently. The parallel displacement between the driving and driven shafts is absorbed by the angle($\triangle\theta$)of the flexible elements, as shown in the following.

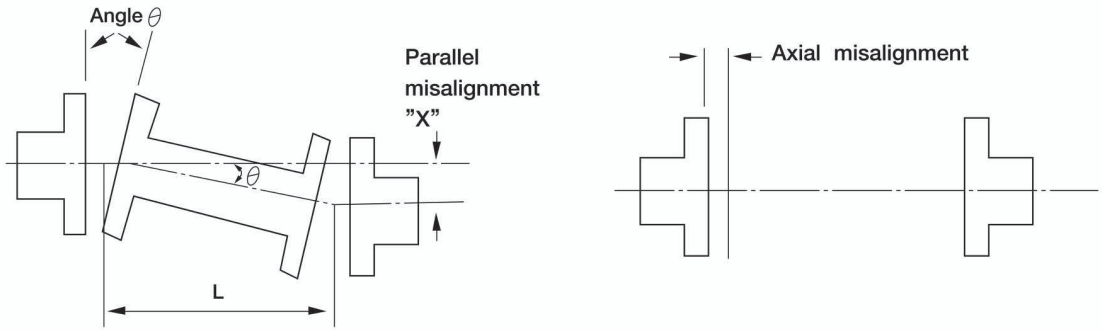

■ MISALIGNMENT

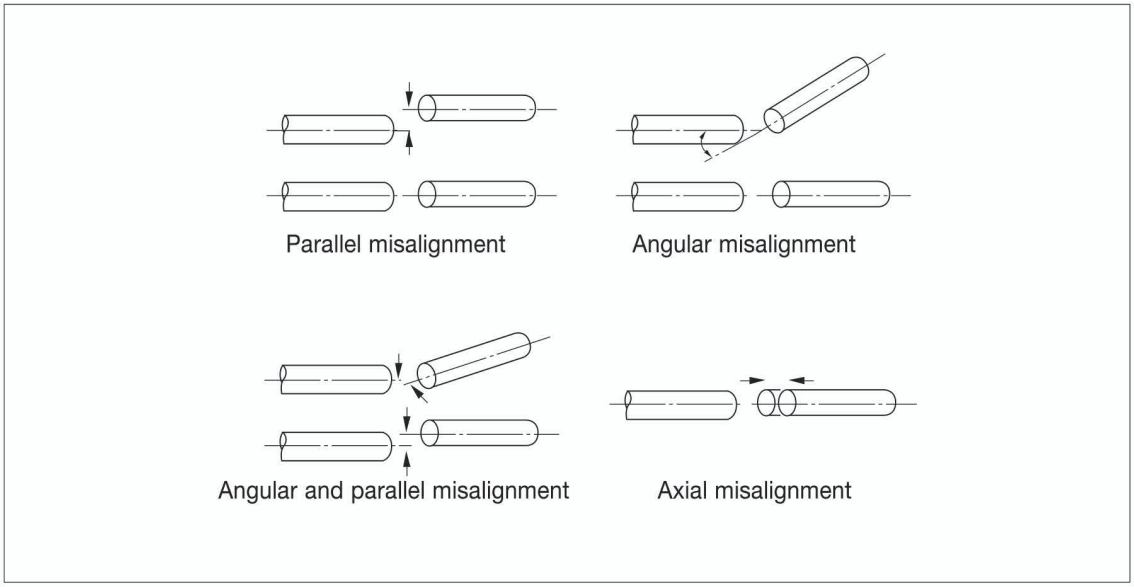

The shafts may be misaligned by various causes, such as the effects of heat, settling foundation, vibration and worm bearing etc.

The initial misalignment and heavy stresss imposed on the coupling will coupling life due to small capacity of absorbing misalignment.

Any or all of the misalignments shown in the above illustrations are present in all connected drives.

The *Jac* Disk coupling permits angular misalignment of up to 1° per flexible element.(in the case of a four-Bolt coupling)

■ END FLOAT

A - TYPE (4Bolt)

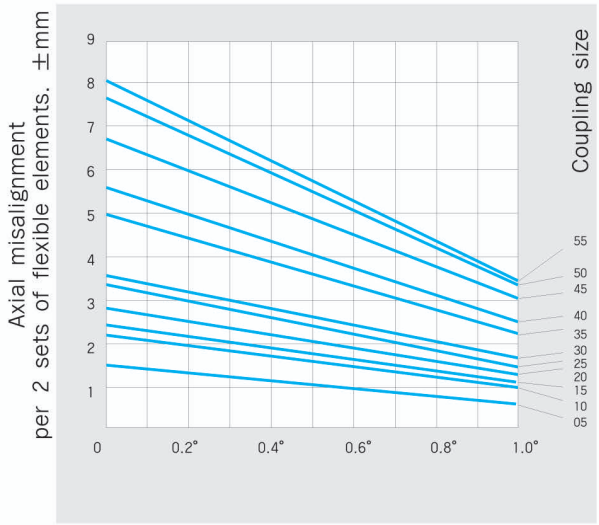

- Most driving equipment requires the absorption of axial displacement(end float). *Jac* Couplings permit great axial displacement with minimum end thrust. The graph shows the degrees of maximum allowable axial displacement in relation to various amounts of angular displacement. Good durability of the couplings is secured by working within the indicated limltes.
- The arrangement of plate packs provides *Jac* couplings with very high degree of torsional stiffness and ensures transmission of torque free from rotational backlash but permits parallel offset displacement, angular displacement, and axial displacement of shafts.

E - TYPE (6Bolt)

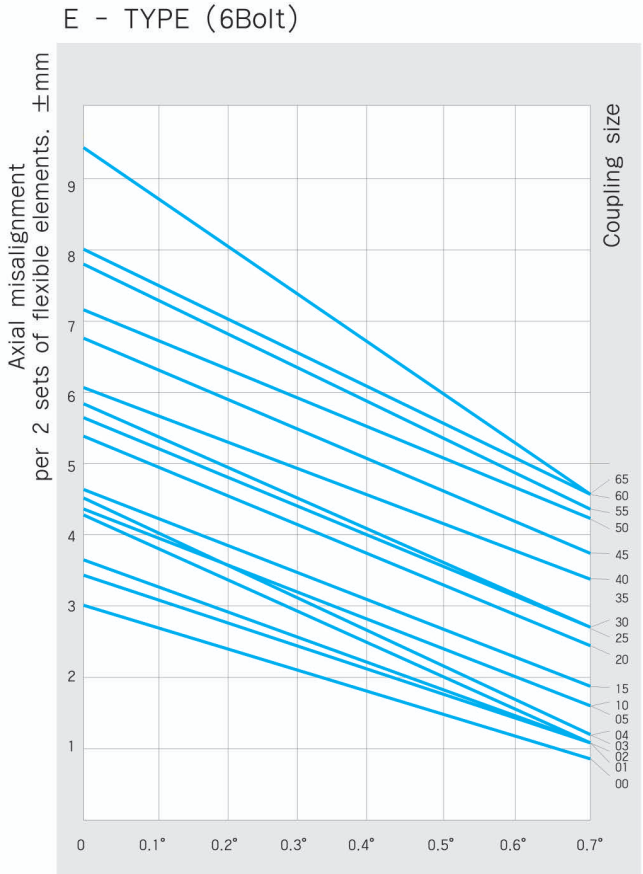

G - TYPE (8Bolt)

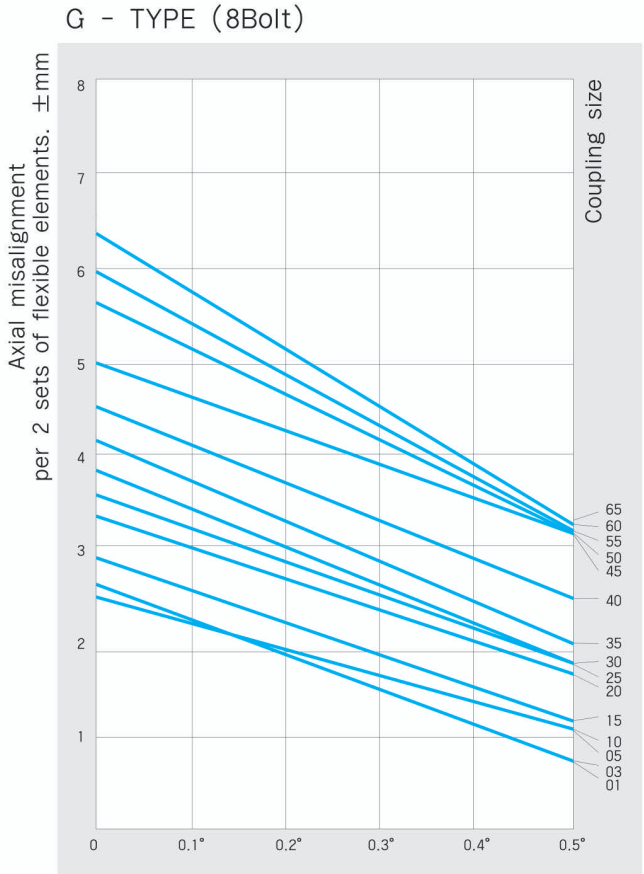

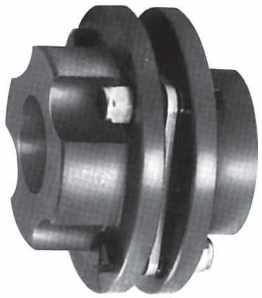

A3- TYPE

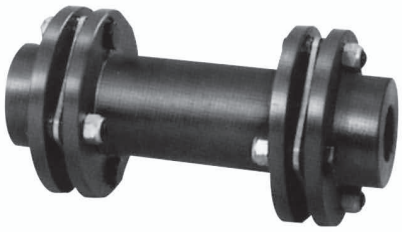

AX, A4 - TYPE



A5 - TYPE

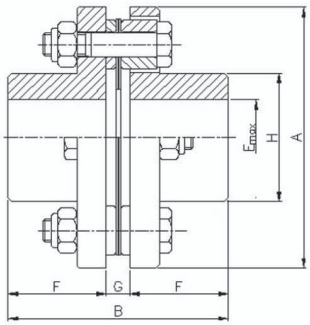

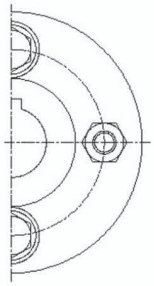

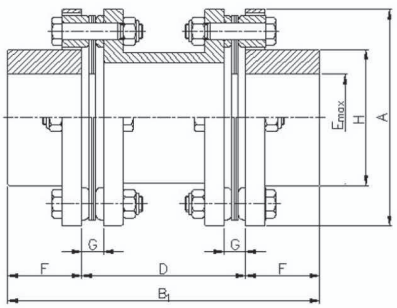



(A3 - TYPE) 4-Bolt

Size No.	Basic torque (Kgf · m)	Max radial load (kg)	Max. rpm	Standard Hub(N-Hub)						Special Hub(K-Hub)			Weight (kg) (A3)	GD² (kgf · cm²)
				A	B	Emax	F	G	H	P-Hub	Z-Hub			
										F	H	Emax		
05	3.4	15	47,000	67.4	56.9	22	25.4	6.1	33.1	40	47	32	0.6	8
10	9.2	25	39,000	81.1	57.4	32	25.4	6.6	45.8	40	58	40	1.1	24
15	18	56	34,000	92.8	65.8	35	28.7	8.4	50.8	45	66	42	1.7	48
20	25	83	30,000	103.7	78.2	42	33.5	11.2	61.0	50	77	48	2.5	80
25	43	120	25,000	125.8	93.9	50	41.1	11.7	71.2	60	92	60	4.3	224
30	79	180	22,000	143.0	107.3	60	47.8	11.7	83.9	70	104	70	6.9	440
35	130	270	19,000	168.0	131.2	72	57.2	16.8	105.5	85	129	85	11.3	1080
40	210	380	16,000	194.1	144	82	63.5	17.0	118.2	100	147	95	16.7	2080
45	340	450	15,000	214.2	174.0	95	76.2	21.6	137.2	115	166	110	22.7	3520
50	500	610	13,000	246.2	201.7	108	88.9	23.9	156.3	135	191	120	35.4	7200
55	650	770	11,000	275.6	230.4	118	101.6	27.2	169.0	150	209	130	52.0	12800

(Ax, A4 - TYPE) 4-Bolt Spacer Type

Size No.	Basic torque (kgf · m)	Max. Speed rpm	A4(Standard)			AX(Short)			AB(Custom)		
			D	Weight (kg)	GD² (kgf · cm²)	D	Weight	GD²	B₁	D	Dmax
05	3.4	47,000	88.9	1.2	18	36	1.1	17.8	2F + D	Desired distance between shaft ends	200
10	9.2	39,000	88.9	1.9	44	39	1.7	41			200
15	18	34,000	101.6	2.9	84	47	2.7	79			250
20	25	30,000	127.0	4.1	148	53	3.7	136			250
25	43	25,000	127.0	7.1	396	62	6.6	337			250
30	79	22,000	127.0	10.8	800	69	10.3	775			300
35	130	19,000	127.0	16.3	1680	78	15.6	1628			300
40	210	16,000	139.7	24.7	3400	89	24.0	3317			350
45	340	15,000	152.4	32.5	5600	97	31.5	5428			350
50	500	13,000	177.8	50.0	11200	109	48.4	10865			350
55	650	11,000	177.8	75.0	20400	134	73.9	20127			400

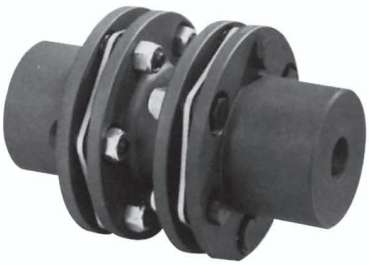

E4-TYPE

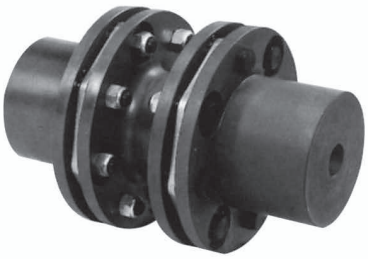

G4-TYPE

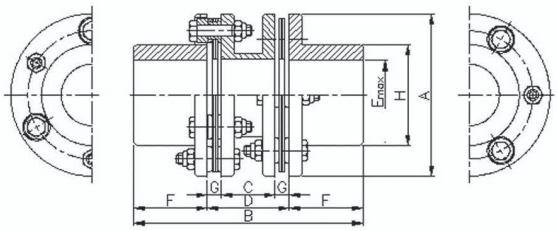

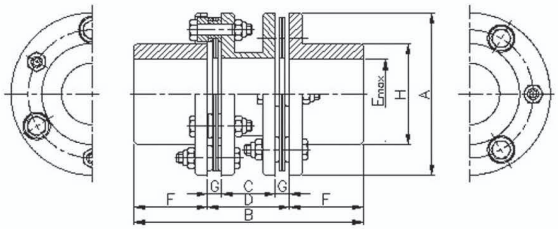

(E4 TYPE) 6-Bolt

Size No.	Torque (kgf · m)	A (㎜)	B (㎜)	C (㎜)	(1) D (㎜)	Emax (㎜)	F (㎜)	G (㎜)	H (㎜)	Max (rpm)	Weight (Kg)	Inertial Effect GD² (Kgf · ㎡)	Torsional stiffness (Kgf ·m/rad)	(2) Allow-able End Float (±㎜)	(3) Axial Spring Constat (kg/㎜)
00	58	119	168	39.4	60	51	54	10.3	74	26,000	6.0	0.03	0.45×10^5	3.0	16.5
01	94	137	198	50.0	72	55	63	11.0	81	23,000	9.1	0.06	0.69×10^5	3.4	21.1
02	174	161	238	67.2	90	67	74	11.4	97	19,000	16.9	0.14	0.94×10^5	3.6	28.0
03	341	180	269	82.4	109	72	80	13.3	104	17,000	21.6	0.26	1.61×10^5	4.2	45.7
04	500	212	308	87.6	118	85	95	15.2	124	15,000	35.1	0.59	3.14×10^5	4.5	60.6
05	620	276	377	118	153	111	112	17.5	161	11,600	65.1	1.8	3.98×10^5	3.9	42.2
10	840	276	377	115	153	111	112	19.0	161	11,600	66.1	1.9	4.95×10^5	3.9	59.5
15	1,090	308	440	134	172	133	134	19.0	193	10,300	107.8	3.7	7.34×10^5	4.2	57.0
20	1,820	346	497	148	191	152	153	21.5	218	9,200	156.1	6.7	1.22×10^6	4.9	76.2
25	2,690	375	553	175	223	165	165	24.0	240	8,500	211.8	10.6	1.70×10^6	5.2	85.7
30	3,410	410	610	195	254	178	178	29.5	258	7,800	274.5	16.5	2.17×10^6	5.4	99.2
35	4,070	445	646	211	270	187	188	29.5	272	7,200	333.3	23.9	2.44×10^6	5.6	103.4
40	4,720	470	686	212	274	205	206	31.0	297	6,800	399.2	30.7	2.99×10^6	6.3	102.0
45	6,100	511	749	223	287	231	231	32.0	334	6,200	525.3	48.0	3.86×10^6	6.7	100.5
50	7,620	556	800	227	292	254	254	32.5	364	5,700	676.3	72.9	4.80×10^6	7.3	113.3
55	9,440	587	839	243	311	263	264	34.0	382	5,400	803.4	100.6	6.09×10^6	7.8	123.2
60	10,890	629	895	274	343	275	276	34.5	399	5,000	954.1	137.4	6.60×10^6	8.7	131.0
65	13,070	654	934	285	356	289	289	35.5	419	4,800	1,095.3	176.9	7.98×10^6	8.9	138.3

(G4 TYPE) 8-Bolt

Size No.	Torque (kgf · m)	A (㎜)	B (㎜)	C (㎜)	D (㎜)	Emax (㎜)	F (㎜)	G (㎜)	H (㎜)	Max (rpm)	Weight (kg)	GD² (kgf · m²)	Allowable Endfloat (±㎜)	Torsional Stiffness (kgf · m)
01	392	214	333	92.6	117	95	108	12.2	137	15,000	38.0	0.65	2.1	7.3
03	726	246	369	99.6	127	108	121	13.7	156	13,000	55.5	1.24	2.1	15.9
05	915	276	421	118	153	111	134	17.5	161	11,600	72.2	1.8	2.1	22.1
10	1,100	276	421	115	153	111	134	19.0	161	11,600	73.3	1.8	2.1	22.1
15	1,570	308	492	134	172	133	160	19.0	193	10,300	119.7	3.7	2.4	45
20	2,610	346	557	146	191	152	183	22.5	218	9,200	174.3	6.8	2.9	58
25	3,850	375	619	167	223	165	198	28.0	240	8,500	233.8	10.8	3.1	110
30	4,810	410	682	192	254	178	214	31.0	258	7,800	305.3	16.7	3.3	150
35	5,820	445	720	208	270	187	225	31.0	272	7,200	367.4	25.0	3.6	170
40	6,570	470	768	206	274	205	247	34.0	297	6,800	447.5	31.1	4.0	170
45	8,530	511	843	221	287	231	278	35.0	334	6,200	591.6	48.0	4.5	170
50	10,530	556	902	218	292	254	305	37.0	364	5,700	761.4	74.7	5.0	310
55	13,070	587	945	236	311	263	317	37.5	382	5,400	901.9	101.6	5.2	360

■ Design standard for Span ring HUB and Thrust Flange

Assemble N-HUB & N-HUB

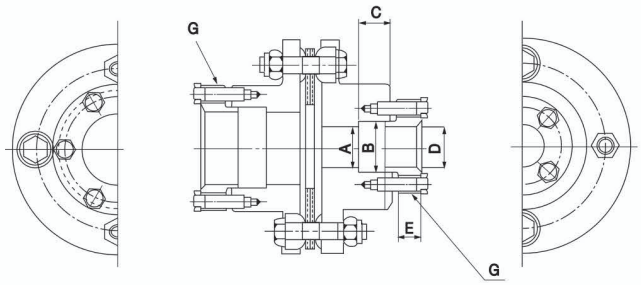

Assemble Z-HUB & N-HUB

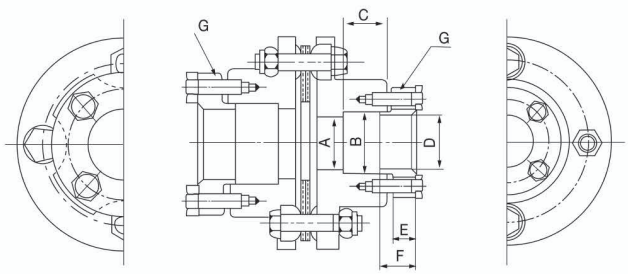

• N-HUB : Standard HUB • Z-HUB : Special HUB

ø A (H7 ㎜) SHAFT DIA	ø B (H7 ㎜) SPAN RING OUT DIA	SPAN RING SIZE	C (㎜) SPAN RING		ø D (㎜) +0.05 +0.10	E (㎜)	MINIMUM APPLICABLE COUPLING SIZE	G BOLT USED
			1EA	2EA				
15	19	15×19	8	14.6	15	10	A3-05Z A3-10N	4-M6×20L
16	20	16×20			16			
17	21	17×21			17			
18	22	18×22			18			
19	24	19×24			19			
20	25	20×25			20		A3-05Z A3-10N A3-15N	4-M6×25L
22	26	22×26			22		A3-10N A3-15N	4-M6×20L 4-M6×25L
24	28	24×28			24	12	A3-10Z A3-15N A3-20N	4-M6×20L
25	30	25×30			25			4-M6×25L
28	32	28×32			28			6-M6×25L
30	35	30×35			30			
32	36	32×36			32		A3-15N A3-20N	
35	40	35×40	9	15	35		A3-15Z A3-20N A3-25N	
36	42	36×42			36		A3-20N A3-25N	6-M8×30L
38	44	38×44			38	15	A3-20Z A3-25N	4-M8×30L 6-M8×30L
40	45	40×45	10	16.5	40		A3-20Z A3-25N A3-30N	4-M8×30L
42	48	42×48			42			6-M8×30L
45	52	45×52	13	21.5	45		A3-25Z A3-30N A3-35N	4-M8×30L
48	55	48×55			48			6-M8×30L
50	57	50×57			50		A3-30Z A3-35N	4-M8×30L
55	62	55×62			55			6-M8×25L

■ Design standards for tapered-shaft bores

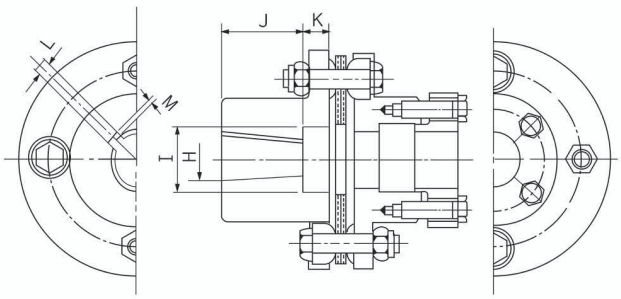

COUPLING SIZE	ø H	ø I	J	K	L	M	TAPER
A3-05-11T	11	21	16	9.4	4H7	1.2	1/10
A3-10-11T	11						
A3-05-16T	16	25	29.5	10.5	5F7	1.5	
A3-10-16T	16						
A3-15-16T	15.46			4.6			
A3-20-16T	16			4			
A3-25-16T	16			11.6			

■ Floating shaft type coupling

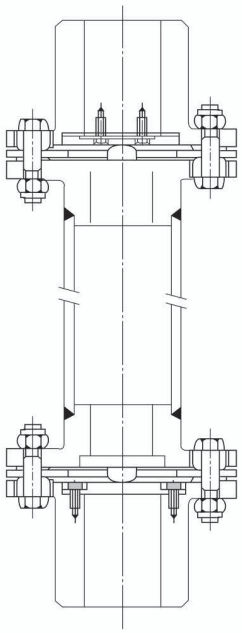

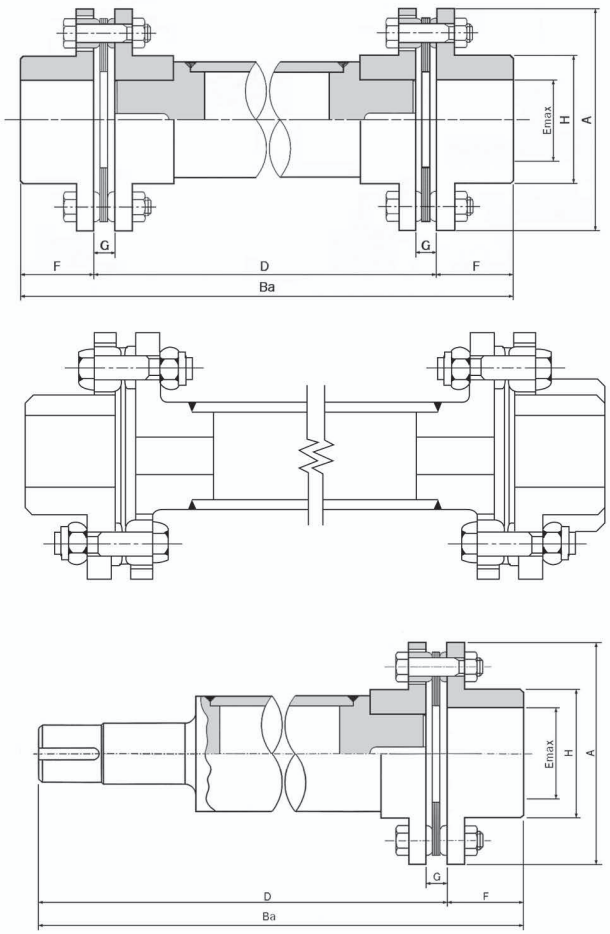

* "D" is the distance between shaft ends. Please give us the further information on "D" when you order.

■ Rotation limitations for standard floating shaft coupling

4Bolts Type (A-TYPE)

Size No.	Maximum Shaft Diameter(mm)		Maximum Span Dmax (mm) for Various Speed(rpm)								
	Standard Hub	Z(K) Hub	1800	1500	1200	1000	900	750	720	600	500
10	32	40	1610	1760	1970	2160	2280	2500	2550	2790	3060
15	35	42	1690	1850	2070	2270	2390	2620	2670	2930	3210
20	42	48	1880	2050	2300	2520	2650	2910	2970	3250	3560
25	50	60	2010	2210	2470	2700	2850	3120	3190	3490	3830
30	58	70	2220	2430	2720	2980	3140	3440	3510	3850	4210
35	74	85	2500	2740	3060	3350	3540	3870	3950	4330	4750
40	83	95	2690	2950	3300	3610	3800	4180	4250	4660	5120
45	95	110	2890	3170	3540	3880	4090	4490	4570	5010	5500
50	109	120	3100	3400	3800	4160	4390	4820	4910	5370	5900
55	118	130	3230	3540	3960	4330	4560	5010	5100	5590	

6Bolts Type (E-TYPE)

Size No.	Maximum distance between shaft ends Dmax (mm) for Various Speed(rpm)									
	Standard Hub	1800	1500	1200	1000	900	750	720	600	500
00	51	2010	2210	2470	2700	2850	3120	3190	3490	3830
01	55	2220	2430	2720	2980	3140	3440	3510	3850	4210
02	67	2500	2740	3060	3350	3540	3870	3950	4330	4750
03	72	2890	3170	3540	3880	4090	4490	4570	5010	5500
04	85	3100	3400	3800	4160	4390	4820	4910	5370	5900
05	111	3100	3400	3800	4160	4390	4820	4910	5370	5900
10	111	3100	3400	3800	4160	4390	4820	4910	5370	5900
15	133	3230	3540	3960	4330	4560	5010	5100	5590	
20	152	3720	4070	4560	4990	5250	5770	5880		
25	165	3720	4070	4560	4990	5250	5770	5880		

8Bolts Type (G-TYPE)

Size No.	Maximum distance between shaft ends Dmax (mm) for Various Speed(rpm)									
	Standard Hub	1800	1500	1200	1000	900	750	720	600	500
01	95	2890	3170	3540	3880	4090	4490	4570	5010	5500
03	108	3100	3400	3800	4160	4390	4820	4910	5370	5900
05	111	3100	3400	3800	4160	4390	4820	4910	5370	5900
10	111	3100	3400	3800	4160	4390	4820	4910	5370	5900
15	133	3230	3540	3960	4330	4560	5010	5100	5590	
20	152	3720	4070	4560	4990	5250	5770	5880		
25	165	3680	4030	4510	4940	5200	5710	5810		

■ Instruction for Installation and Maintenance

1. Distance between shaft ends
   To have coupling in the correct position, see both flange faces(G dimensions) within ±0.25mm, except in special cases.

2. Angular misalignment(Fig.1)

   (a) Fix a dial gauge on one side of hub, rotate hub, find minimum reading on dial gauge at zero.

   (b) Rotate coupling side with dial gauge 360~and readjust dial gauge so it shows smallest deflection reading. Peripheral face deflection for an angular misalignment of 0.1° is as shown in the table below.

   (c) Peripheral section of dial gauge may show abnormal deflection at through-hole area of hub. This is due to flaring of flange during working. Avoid this area

table 1.

Size No.		05	10	15	20	25	30	35	40	45	50	55
Gauge Reading (Tir mm)	Type A	0.12	0.15	0.16	0.20	0.22	0.25	0.29	0.34	0.40	0.43	0.48

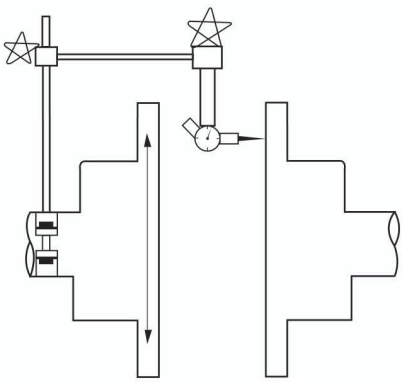

Fig. 1

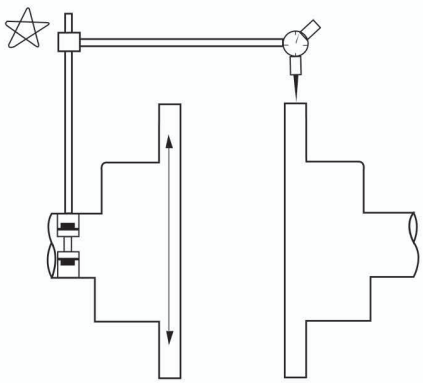

Fig. 2

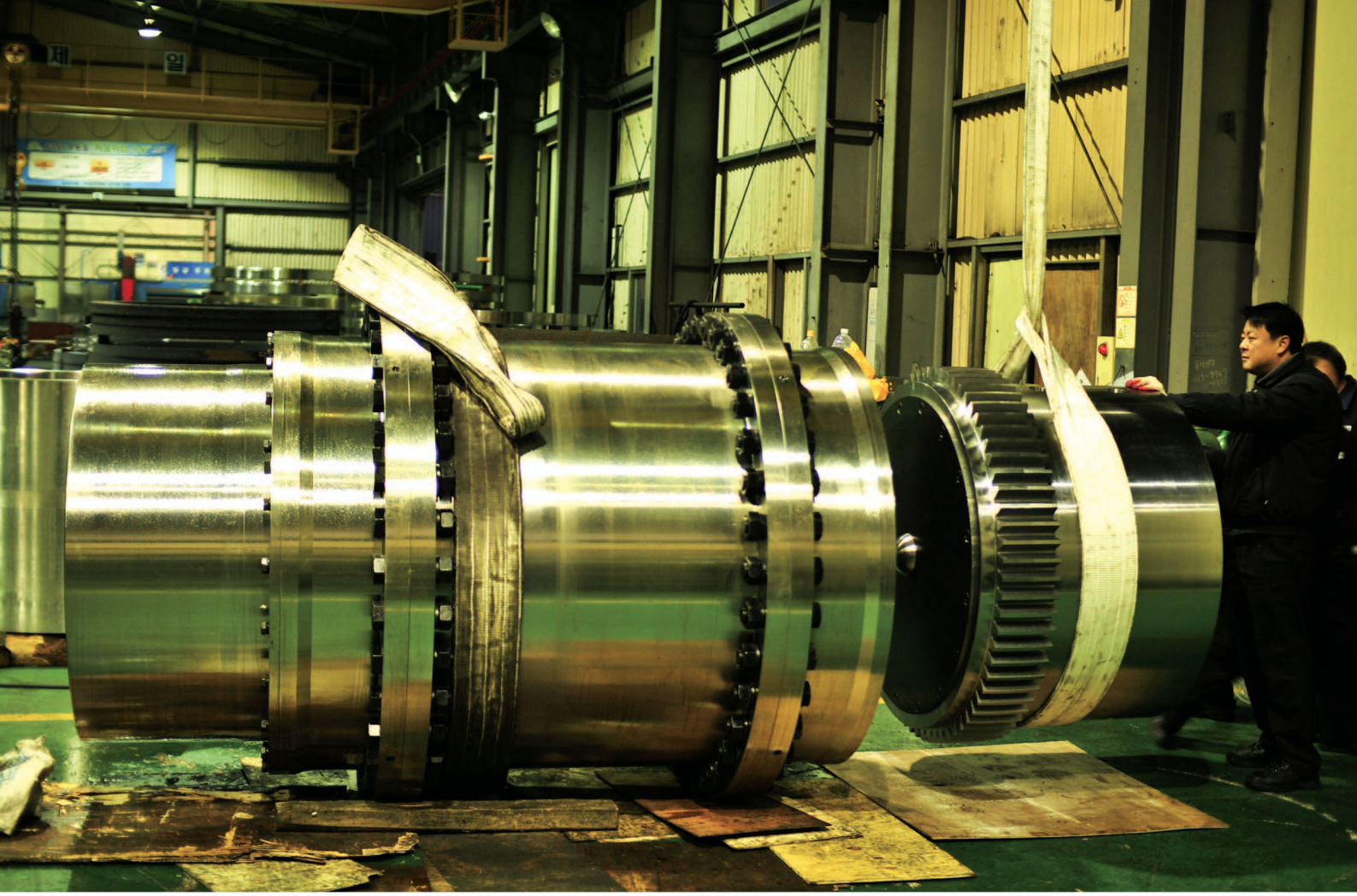







Jac coupling

HOME PAGE http ：// www.jacoup.co.kr
E-mail ： jac@jacoup.co.kr