Fluorescent (Emergency) Lighting Fixtures
SYFL Series

Wet Locations
NEMA 3, 3R, 7

❖ Type of Explosion-proof
Non - Sparking (Ex nR II T6)

❖ Application

SYFL Series fluorescent lighting fixtures are used ;

- in heavy process industries having environments where flammable or explosive vapors or gases are present.
- in hazardous areas, both indoors and outdoors where long life and low maintenance costs are desired.
- in petroleum refineries, chemical, petrochemical and other heavy process industry facilities.
- were ignitable concentrations of flammable gases, vapors or liquids can exist all of the time or some of the time under normal operation conditions.
- in installations where moisture, dirt, dust, vibration, corrosion and rough usage are problems.

❖ Features

- The lighting unit consists of the main body and the reflector, both made of pressed sheet steel, and one or two lamp cover assemblies.
- The lamp cover is sealed at each and into the lampholder casing by synthetic rubber packing, and an access cover to the relamping lampholder is provided so as to restrict breathing. The cover for replacement of lamp at the end of one lampholder casing.
- The ballast is made in compliance with the increased safety requirements, and is mounted to the reverse side of the main body.
- The guard is designed to be able to open at either side by releasing two fixing screws. This allows easy cleaning of the lamp cover.



<SYFL 31152>

❖ Standard Materials

- Enclosure : Sheet steel
- Lamp cover :
  Heat resistant hard tubing glass
- Guard : Stainless steel
- Reflector : Sheet steel
  (Stove enamelled white inside)
- Suspension stem :
  Heavy gauge steel pipe

❖ Certification

- Certified by KOSHA (Korea Occupational Safety & Health Agency), KGS (Korea Gas Safety Corporation), and the others.

❖ Compliance

- IEC 60079-0, 1, 7
- NEMA 3, 3R, 7

❖ Standard Finish

- MUNSELL No. 7.5BG 6/1.5
- If you want another color, contact us please.

❖ Weight

Catalog No.	Weight
SYFL 31152	11.8 kg

❖ Technical Data

Electrical Rating	
Rated Voltage	AC110V/ 220V/ 240V
Rated Wattage	18W/ 18W×2/ 20W/ 20W×2/ 32W/ 32W×2/ 36W/ 36W×2/
Rated Frequency	50Hz/ 60Hz
Entry Size	1/2", 3/4", 1"

❖ Emergency

Battery Rating
DC 9.6V 1.2Ah
Operating Time
30min or 1hr

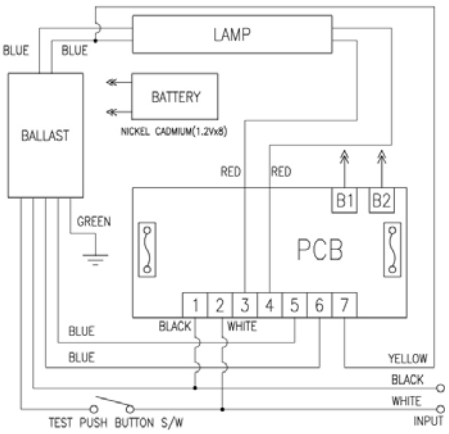

❖ Relamping



Lamp housing is sloped as shown for ease of relamping (no space needed between fixtures for relamping)

⇨ If you need more information, contact us please.

Copyright by NAMBUK Electric Co., LTD. 2004

❖ Ordering Number

Type	Watt	Voltage(V)	Pendant	Ceiling	90° Bracket	40° Bracket	Certification
Fluorescent Lighting Fixture	18W×1	110	SYFL 31121	SYFL 32121	SYFL 33121	SYFL 34121	Ex nR II T6
		220	SYFL 31221	SYFL 32221	SYFL 33221	SYFL 34221	
	18W×2	110	SYFL 31122	SYFL 32122	SYFL 33122	SYFL 34122	
		220	SYFL 31222	SYFL 32222	SYFL 33222	SYFL 34222	
	20W×1	110	SYFL 31121	SYFL 32121	SYFL 33121	SYFL 34121	
		220	SYFL 31221	SYFL 32221	SYFL 33221	SYFL 34221	
	20W×2	110	SYFL 31122	SYFL 32122	SYFL 33122	SYFL 34122	
		220	SYFL 31222	SYFL 32222	SYFL 33222	SYFL 34222	
	32W×1	110	SYFL 31131	SYFL 32131	SYFL 33131	SYFL 34131	
		220	SYFL 31231	SYFL 32231	SYFL 33231	SYFL 34231	
	32W×2	110	SYFL 31132	SYFL 32132	SYFL 33132	SYFL 34132	
		220	SYFL 31232	SYFL 32232	SYFL 33232	SYFL 34232	
	36W×1	110	SYFL 31151	SYFL 32151	SYFL 33151	SYFL 34151	
		220	SYFL 31251	SYFL 32251	SYFL 33251	SYFL 34251	
	36W×2	110	SYFL 31152	SYFL 32152	SYFL 33152	SYFL 34152	
		220	SYFL 31252	SYFL 32252	SYFL 33252	SYFL 34252	
Emergency Fluorescent Lighting Fixture	18W×1	110	SYEFL 31121	SYEFL 32121	SYEFL 33121	SYEFL 34121	
		220	SYEFL 31221	SYEFL 32221	SYEFL 33221	SYEFL 34221	
	18W×2	110	SYEFL 31122	SYEFL 32122	SYEFL 33122	SYEFL 34122	
		220	SYEFL 31222	SYEFL 32222	SYEFL 33222	SYEFL 34222	
	20W×1	110	SYEFL 31121	SYEFL 32121	SYEFL 33121	SYEFL 34121	
		220	SYEFL 31221	SYEFL 32221	SYEFL 33221	SYEFL 34221	
	20W×2	110	SYEFL 31122	SYEFL 32122	SYEFL 33122	SYEFL 34122	
		220	SYEFL 31222	SYEFL 32222	SYEFL 33222	SYEFL 34222	
	32W×1	110	SYEFL 31131	SYEFL 32131	SYEFL 33131	SYEFL 34131	
		220	SYEFL 31231	SYEFL 32231	SYEFL 33231	SYEFL 34231	
	32W×2	110	SYEFL 31132	SYEFL 32132	SYEFL 33132	SYEFL 34132	
		220	SYEFL 31232	SYEFL 32232	SYEFL 33232	SYEFL 34232	
	36W×1	110	SYEFL 31151	SYEFL 32151	SYEFL 33151	SYEFL 34151	
		220	SYEFL 31251	SYEFL 32251	SYEFL 33251	SYEFL 34251	
	36W×2	110	SYEFL 31152	SYEFL 32152	SYEFL 33152	SYEFL 34152	
		220	SYEFL 31252	SYEFL 32252	SYEFL 33252	SYEFL 34252	

❖ Ordering Information

SYFL 3 1 1 2 1
① ② ③ ④ ⑤ ⑥

① Lighting Fixture Type
SYFL - Increase Safety Fluorescent Lighting Fixture
SYEFL - Emergency Fluorescent Lighting Fixture

② Ballast Type
3 - Internal Ballast

③ Mounting Type
1 - Pendant
2 - Ceiling
3 - 90° Bracket
4 - 40° Bracket

④ Voltage (V)
1 - 110
2 - 220
3 - 230
4 - 240

⑤ Lamp Wattage (W)
1 - 18
2 - 20
3 - 32
4 - 40
5 - 36

⑥ Quantity of Lamp
1 - ×1
2 - ×2

❖ Photometric Data

<SYFL 32152>

+Lamp : FL36×2
(2×2500 lm)
+With Globe and Guard

☞right picture explanation
+Blue : Normal to Lamp
+Red : Parallel to Lamp

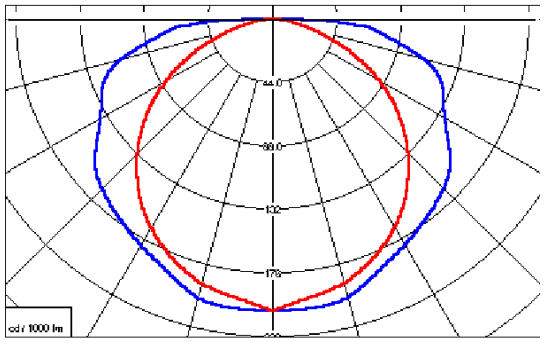

Angle	cd/1000 lm		Angle	cd/1000 lm	
	Blue	Red		Blue	Red
0	201.3	201.3	50	160.0	116.3
5	201.3	195.0	55	146.3	101.3
10	201.3	192.5	60	135.0	83.8
15	200.0	188.8	65	128.8	65.0
20	191.3	182.5	70	123.8	47.5
25	185.0	175.0	75	110.0	30.0
30	180.0	166.3	80	82.5	16.3
35	175.0	156.3	85	68.8	7.5
40	170.0	143.8	90	50.0	2.5
45	165.0	131.3			

Copyright by NAMBUK Electric Co., LTD. 2004

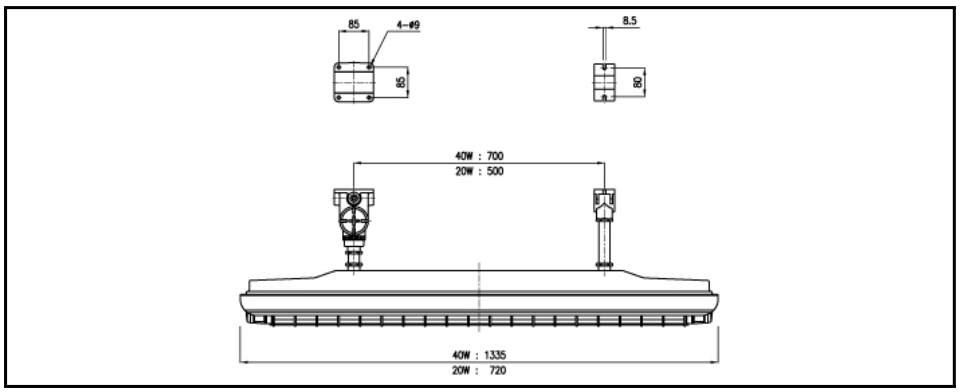

< SYFL >

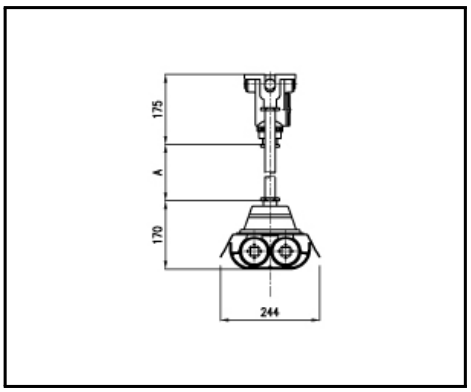

< Pendant Type >

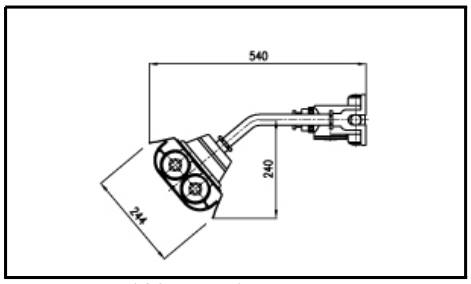

< 40° Bracket Type >

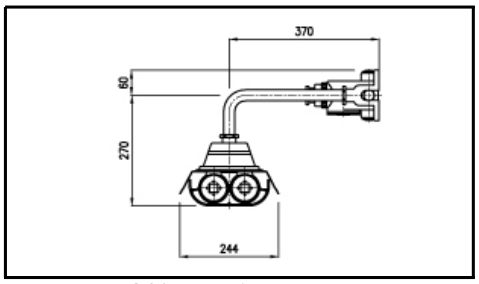

< 90° Bracket Type >

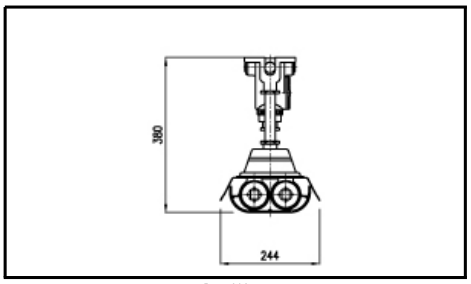

< Ceiling Type >

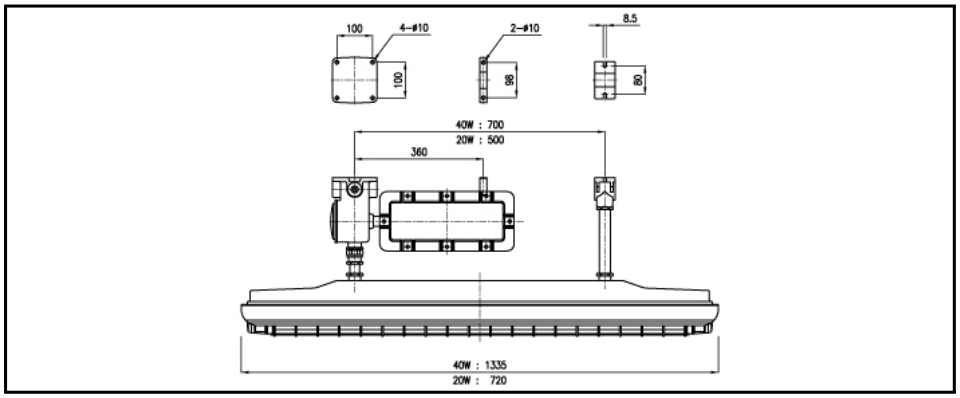

< SYEFL Series >

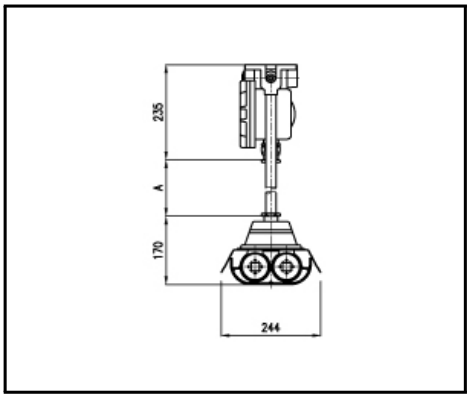

< Pendant Type >

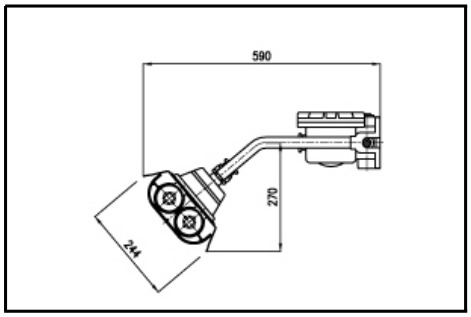

< 40° Bracket Type >

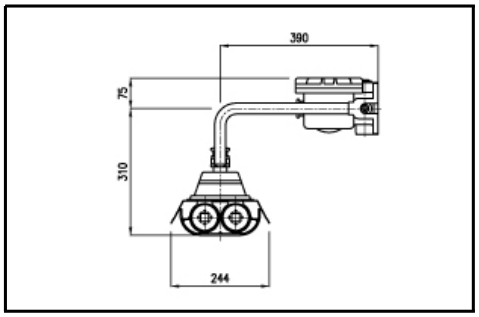

< 90° Bracket Type >

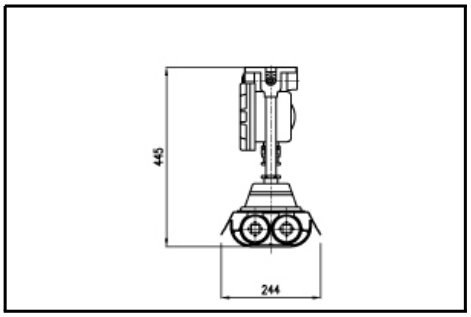

< Ceiling Type >

Copyright by NAMBUK Electric Co., LTD. 2004