수배전반용 변압기, 산업용빌딩의 메인 분전반(ACB), 직격뢰의 위험이 큰 장소

Class I+II / SPC3-XXX(DS)



▲ SPC3-90

- 3P4W (AC400/230V)
- 동작 상태 표시 기능
- Mov Fault Alarm 기능 (DS형)
- 4phase power supply network TN-S, TT

○ Indicators for fault and Power
○ Remote contact is option

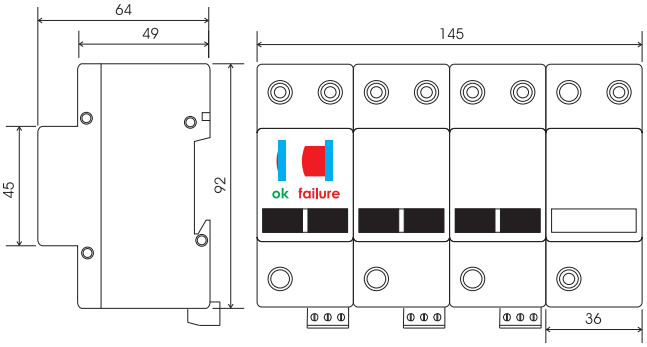

Technical data

Model		SPC3-XXX(DS)			
Electrical characteristics		90(DS)	120(DS)	150(DS)	170(DS)
Max. continuous operating voltage	U_C	275V			
	$U_{C(N-PE)}$	255V			
Lightning impulse current (10/350)	$I_{imp(L/N)}$	12kA	16kA	20kA	20kA
	$I_{imp(N-PE)}$	20kA	20kA	20kA	20kA
Nominal discharge current (8/20)	I_n	50kA	65kA	80kA	80kA
Max. discharge current (8/20)	I_{max}	90kA	120kA	150kA	170kA
Voltage protection level at I_n	U_p	〈1.3kV			
Response time	$t_{A(L-N/N-PE)}$	〈25ns/100ns			
Temperature range		-40℃~+80℃			
Degree of protection		IP20			
Mounting		DIN rail 35 mm			

Dimension / Internal configuration

SPC3-90

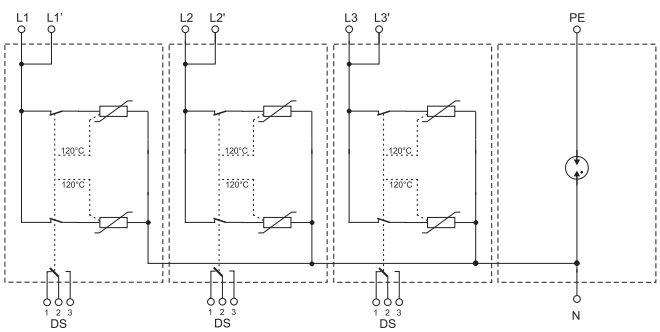

SPC3-120,150,170

