

연속벽장비

Diaphragm Wall Equipment

- Trench Cutter
- Diaphragm Wall Grab
- Desander
- Filter Press
- Decanter

www.sambocmc.com

FILTER PRESS

Special features

SAMBO Filter press is to treat the wastes water and slurry, especially the waste bentonite slurry. It consists of steel frames, filter plates recessed or membrane type with filters, plate separation device, cleaning device, belt conveyor, slurry feed pump, etc..
It dehydrates various wastes slurry by filter pressing, and minimizes the water content of the processed solids. In case of the waste bentonite slurry from a typical construction jobsite, the water content of the processed solids cakes becomes some 25~35% which is very good condition for easy trucking out.
According to customer's requirements, the filter press of different capacity and specifications can be designed and made.

특 징

SAMBO FILTER PRESS는 슬러지를 탈수시키는 기계장치로써 후레임,여과판(Membrane, Recessed), 여과판 가압장치, 판분리장치, 슬러리 이송펌프, 고형물(Cake) 이송장치, 여과포 세척장치 등으로 구성되어 있음.
가압펌프 및 여과포에 의해 각종 폐액의 수분을 걸러내어 탈수 고형물의 함수율(25%~35%)을 최대한 낮게 만드는 탈수 설비입니다.
특수 재질의 여과판, 여과포를 사용하므로 부식성이 없고 내식성이 강하며, 조작 및 운전이 용이하고 전자동시스템으로 운전자가 없어도 탈수 공정이 가능하도록 설계되었습니다.
처리용량 및 사양은 구매자의 요청에 적합하게 변경 가능합니다.

TREATMENT CAPACITY

Description	Model					Remarks
	SFP-100/60	SFP-120/60	SFP-130/60	SFP-150/60	SFP-150/80	
Supplied volume of the slurry water (슬러지 공급양)	5.25 ㎥/cycle	8.4 ㎥/cycle	11.2 ㎥/cycle	15.7 ㎥/cycle	21.0 ㎥/cycle	*Water content 80% (*함수율80%)
Discharged volume of the cake (탈수 고형물)	1.5 ㎥/cycle	2.4 ㎥/cycle	3.2 ㎥/cycle	4.5 ㎥/cycle	6.0 ㎥/cycle	*Water content 30% (*함수율30%)
Recycled water (회수 청수량)	3.75 ㎥/cycle	6 ㎥/cycle	8 ㎥/cycle	11.2 ㎥/cycle	15 ㎥/cycle	pH : 6.5~8.5 BOD:under 5mg/Ltr

* The percentage of water content of the slurry water at the general diaphragm wall job site is approximately 80 %
** The discharged cake whose water content 30% can be dumped without any re-treatment
- One cycle takes approximately 50 minutes depend on the slurry condition
(1회 싸이클당 일반적으로 50분 소요되며, 슬러지 조건에 따라 다름.)



Filter press flow chart

CYCLE TIME	(Unit : min)
1. Moving Head forward(CYL'D)	2
2. Slurry Pump 1st Pressing	25
3. Slurry Pump 2nd Pressing	5
4. Core Blow Operation	4
5. Moving Head Backward	2
6. Cake Drop	12
Total	*50 min

* Cycle time may be changed depending on slurry condition

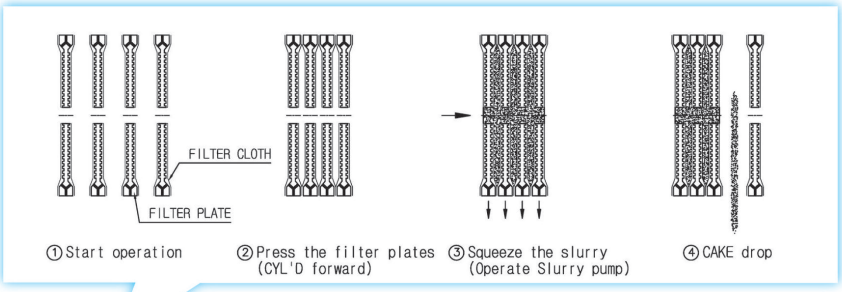

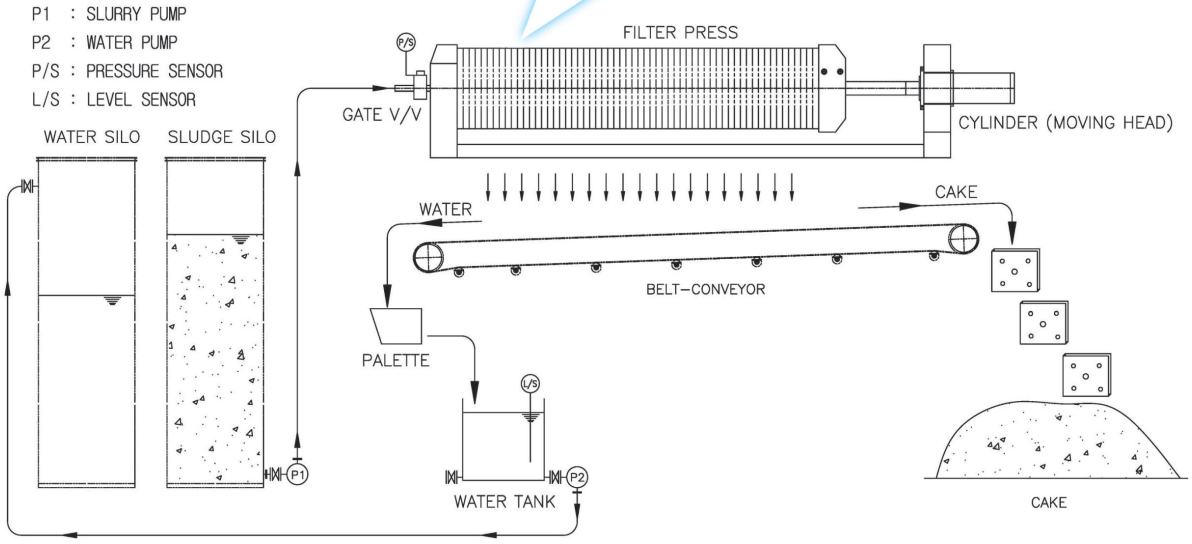





SAMBOCMC CONSTRUCTION MACHINE CO., Ltd.

Filter press

1. UPPER FRME
2. LOWER FRAME
3. POLYPROPYLENE PLATES with FILTERS
4. HYDRAULIC CYLINDER
5. HYDRAULIC UNIT
6. BELT CONVEYOR
7. CONTROL PANEL
8. AIR COMPRESSOR
9. FEED PUMP
10. WATER TANK
11. WATER PUMP

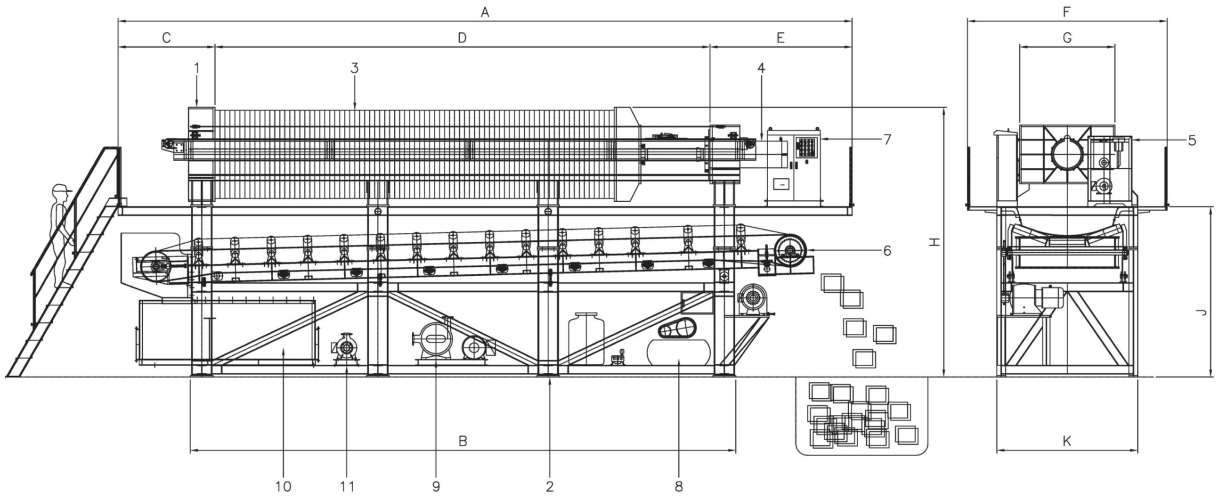

Model	A	B	C	D	E	F	G	H	J	K
SFP-100/60	8,625	5,740	1,250	5,750	1,625	2,720	1,100	4,130	2,780	1,960
SFP-120/60	9,710	6,790	1,700	6,010	2,000	3,160	1,300	4,200	2,875	2,200
SFP-130/60	10,800	7,590	1,650	6,730	2,420	3,200	1,420	4,300	2,900	2,300
SFP-150/60	10,800	7,590	1,650	6,730	2,420	3,400	1,620	4,590	2,900	2,400
SFP-150/80	12,500	9,290	1,650	8,430	2,420	3,400	1,620	4,590	2,900	2,400

SPECIFICATIONS

Model	SFP-100/60	SFP-120/60	SFP-130/60	SFP-150/60	SFP-150/80
Min. Cycle time (1회 싸이클 타임)	40 min/cycle	40 min/cycle	40 min/cycle	45 min/cycle	50 min/cycle
Volume of cake (형성 케이크량)	1.5㎥/cycle	2.4㎥/cycle	3.2㎥/cycle	4.5㎥/cycle	6.0㎥/cycle
P.P Plate size (여과판 크기)	1,000x1,000x64T(mm)	1,200x1,200x76T(mm)	1,300x1,300x85T(mm)	1,500x1,500x85T(mm)	1,500x1,500x85T(mm)
Cake thickness (케이크 두께)	30 mm	35 mm	45 mm	45 mm	45 mm
Plate quantity (여과판 개수)	60 pcs	60 pcs	60 pcs	60 pcs	80 pcs
Plate material (여과판 재질)	Polypropylene	Polypropylene	Polypropylene	Polypropylene	Polypropylene
Plate type (여과판 형식)	Recessed	Recessed	Recessed	Recessed/Membrane	Recessed/Membrane
Control system (탈수/케이크 탈리 시스템)	Automatic & Manual	Automatic & Manual	Automatic & Manual	Automatic & Manual	Automatic & Manual
Slurry(Feed) pump (공급 펌프)	1.0 ㎥/min x 50m	1.0 ㎥/min x 50m	1.5 ㎥/min x 70m	1.5 ㎥/min x 70m	1.5 ㎥/min x 70m
Belt conveyor (벨트 콘베이어)	1,200W x 20° x 7,100L	1,400W x 20° x 8,400L	1,500W x 20° x 9,100L	1,700W x 20° x 9,100L	1,700W x 20° x 10.800L
Hydraulic unit (유압 파워 유니트)	5.5kW x 200liters	7.5kW x 250liters	7.5kW x 250liters	11kW x 250liters	11kW x 250liters
Hydraulic cylinder (압축 실린더)	240/140-700ST	300/160-900ST	320/180-1000ST	350/200-1000ST	350/200-1000ST
Air compressor (에어 콤프레셔)	3.7kW	3.7kW	5.5kW	5.5kW	5.5kW
Water tank capacity (집수 탱크 용량)	3 ㎥	3 ㎥	3 ㎥	3 ㎥	3 ㎥
Water pump (배출 펌프)	80A	80A	100A	100A	100A
Weight (중량)	18 tons	23 tons	30 tons	31 tons	34 tons

The above may change during further development. (상기 사양은 보다 나은 개발을 위해 변경될 수 있음.)

Filter Press



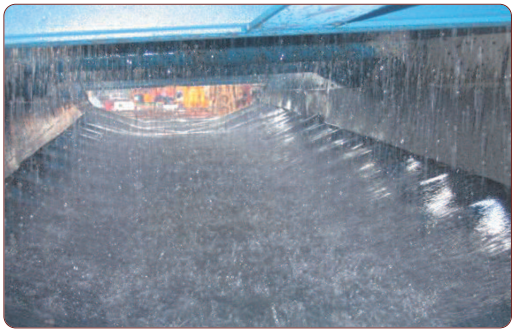



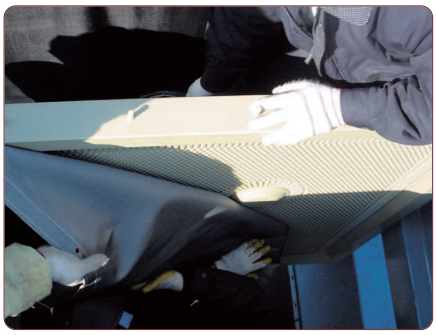







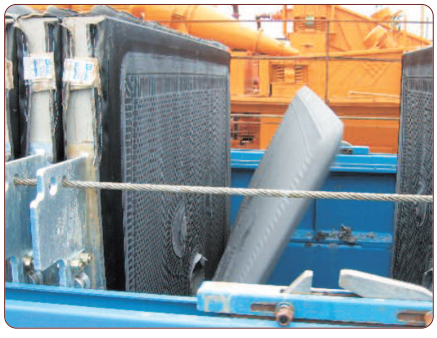



• Head Office

65, Mieumsandan 4-ro, Gangseo-gu, Busan
Rep. of KOREA
TEL : +82-51-717-0581
FAX : +82-51-717-0582
E-Mail : sambo@sambocmc.com
Web Site : www.sambocmc.com

• Canada Branch Office

02-4001 Mt Seymour Pky North Vancouver BC V7G 1CS, Canada
TEL : +91-22-2648-4988
FAX : +91-22-2605-9427
E-Mail : ronakexp@yahoo.com
Web Site : www.sambocmc.com

• Hong Kong/China/Macau Exclusive Distributor

Houston Machine(China)
Company Limited Room 1801-2, 18/F
Seaview Commercial Building,
21-24 Connaught Road West, Hong Kong
TEL : +852-2544-8821
FAX : +852-2544-2866
E-Mail : info@houstonhk.com
Web Site : www.houstonhk.com

• USA / Canada Distributor

Bermingham Foundation Solution
600 Ferguson Avenue North, Hamilton,
ON Canada L8L 4Z9, Canada
TEL : +1-800-668-9432
FAX : +1-905-528-6187
E-Mail : BFSSales@Berminghammer.com
Web Site : www.berminghammer.com

• Singapore Distributor

Foundation Associates Engineering PTE LTD
5, Tuas Avenue 1 Singapore 639490, Singapore
TEL : +65-6863-1633
FAX : +65-6863-1455
E-Mail : fnapl@singnet.com.sg
Web Site : www.fnapl.com

• India Distributor

Sugam Infrastucture Limited
3B, 'Sarat Bose Road Kolkata – 700 020, India
TEL : +91-33-3052-1200
FAX : +91-33-2485-8636
E-Mail : arvind.saraf@sugaminfra.com
Web Site : www.sugaminfra.com

오시는 길



Sambo Construction Machine co., ltd.
65, Mieumsandan 4-ro, Gangseo-gu, Busan, Korea
(618–220) 부산시 강서구 미음산단 4로 65
TEL : +82–51–717–0581 **FAX** : +82–51–717–0582

www.sambocmc.com

SAMBO CONSTRUCTION MACHINE CO., LTD.
www.sambocmc.com
Copyright © SAMBOCMC All Rights Reserved.