Excelsior® One™ CW Lasers

NEW COMPACT DIRECT DIODE AND DPSS LASERS



The Excelsior One Advantage

- Largest portfolio of up to 14 different wavelengths options
- **One** interface for highest modularity
- **One** supply voltage for all models
- **One** platform offering free space and fiber-coupled models
- **One** box with laser head and controller
- Single frequency and multi-mode options for DPSS lasers
- High speed TTL for all direct diode models
- RS 232 software interface for all lasers
- Outstanding mode quality that enables tight focusing
- Low rms noise for reliable high speed data acquisition

It's in the Box™

Spectra-Physics
A Newport Corporation Brand

The Spectra-Physics Excelsior® One™ series is a new line of UV, visible, and near IR CW lasers based on Spectra-Physics *It's in the Box™* design with the laser head and controller combined in a single, compact package. The Excelsior One series is available as free space and fiber-coupled lasers that include fourteen different wavelengths and delivers up to 500 mW of average power. The series includes both direct diode and diode-pumped solid state (DPSS) laser technology in a compact package offering multi-mode and single frequency options using the exact same mechanical footprint.

One Platform for 14 Wavelengths – 375, 405, 445, 473, 488, 515, 532, 542, 553, 561, 594, 642, 785, and 1064 nm

The Excelsior One series offers 1064 nm in the infrared, while the visible wavelengths options at 473, 515, 532, 542, 553, 561, and 594 nm are based on patented frequency doubling techniques for the DPSS models. Direct diode models – with the option of high speed modulation and serial software interface – are available at 375, 405, 445, 488, 642, and 785 nm. For ease-of-use and laser power control, all Excelsior One lasers are equipped with an RS 232 software interface.

The Excelsior One lasers are ideal for customers who rely on modularity in their instrument design. With the Excelsior One series, customers can choose among over 50 different versions in a single footprint and a single supply voltage. This enables maximum independence and the fewest design constraints.

Fiber-Coupled Models

The Excelsior One series is also offered with fiber-coupled options from 405 nm to 1064 nm using single mode, polarization maintaining fibers. These fiber-coupled lasers offer outstanding power stability in harsh operating environments, and a polarization extinction ratio (PER) of less than -30 db over the specified operating temperature range. The fiber-coupled Excelsior One lasers are terminated with a FC/APC connector.

APPLICATIONS

- Flow cytometry
- Confocal microscopy
- Micro-array readers
- Laser-induced fluorescence
- Raman spectroscopy
- DNA sequencing
- Interferometry
- Semiconductor inspection and metrology

Excelsior® One™ CW Lasers

Free Space 375–515 nm Specifications

	Excelsior One 375	Excelsior One 405	Excelsior One 445	Excelsior One 473	Excelsior One 488	Excelsior One 515
Wavelength	375 ±5 nm	405 ±5 nm	445 ±5 nm	473 nm	488 ±5 nm	515 nm
Output Power	70 mW	50, 100, 200 mW	100 mW	10, 50 mW	20, 50, 100 mW	50 mW
Longitudinal Mode	Multi	Multi	Multi	Single	Multi	Single
Spectral Linewidth	<0.5 nm	<1 nm	<1 nm	<0.01 pm	<1.5 nm	<0.01 pm
Technology	Direct Diode	Direct Diode	Direct Diode	DPSS	Direct Diode	DPSS
Beam Quality, TEM_{00}	<1.3	<1.3	<1.3	<1.1	<1.3	<1.1
Beam Diameter ($1/e^2$)	0.7 ±0.07 mm					
Beam Divergence	<1.3 mrad	<1.4 mrad	<1.5 mrad	<1.2 mrad	<1.7 mrad	<1.2 mrad
Beam Ellipticity	1 ±0.1					
Polarization Ratio	>100:1					
Beam Pointing Stability	<6 µrad/°C					
Noise (20 Hz – 20 MHz)	<0.2% rms	<0.2% rms	<0.2% rms	<0.2% rms	<0.3% rms	<0.5% rms
Power Stability (over 8 hours)	<±2%					
Warm-up Time	<5 min					
Beam Height	19 mm					
Operating Voltage	+5 VDC					
Maximum Power Consumption	<10 W	<10 W	<10 W	<30 W	<10 W	<35 W
Operating Temperature	10 to 40°C (80% relative humidity)					
Maximum Laser Head Base Plate Temperature	50°C	50°C	50°C	45°C	50°C	45°C
Storage Temperature Range	-20 to +60°C					
Dimensions (L x W x H)	3.94 x 1.57 x 1.57 in (100 x 40 x 40 mm)					

Fiber Coupled 405–532 nm Specifications

	Excelsior One 405-FC	Excelsior One 445-FC	Excelsior One 473-FC	Excelsior One 488-FC	Excelsior One 515-FC	Excelsior One 532 Multi Mode-FC	Excelsior One 532 Single Mode-FC
Wavelength	405 ±5 nm	445 ±5 nm	473 nm	488 ±5 nm	515 nm	532 nm	532 nm
Output Power	70 mW	70 mW	40 mW	70 mW	40 mW	40 mW	150 mW
Longitudinal Mode	Multi	Multi	Single	Multi	Single	Multi	Single
Spectral Linewidth	<1 nm	<1 nm	<0.01 pm	<1.5 nm	<0.01 pm	<0.5 nm	<0.01 pm
Technology	Direct Diode	Direct Diode	DPSS	Direct Diode	DPSS	DPSS	DPSS
Beam Quality, TEM_{00}	<1.1						
Power Stability (constant ambient temperature)	<±1.0% (over 8 hours)						
Power Stability vs Ambient Temperature Changes	<±3.0% (over 8 hours)						
Noise (20 Hz – 20 MHz)	<0.5 %						
Mode Field Diameter, typical	3.5 ±0.7 µm	3.7 ±0.7 µm	3.7 ±0.7 µm	4.0 ±0.7 µm	4.3 µm	4.2 ±0.7 µm	4.2 ±0.7 µm
Fiber Numerical Aperture (NA)	0.07–0.1						
Polarization Ratio	>100:1						
Polarization Orientation Tolerance (E-Vector)	90 ±4°						
Beam Ellipticity	1 ±0.1						
Warm-up Time	<5 min						
Fiber Length	1 m ±100 mm						
Fiber Connector	FC/APC or FC/AFC (optional)						
Fiber Jacket Type	ø3 mm PVC or SUS						
Operating Voltage	+5 VDC						
Maximum Power Consumption	<10 W	<10 W	<30 W	<10 W	<35 W	<30 W	<30 W
Operating Temperature	10 to 40°C (80% relative humidity)						
Maximum Laser Head Base Plate Temperature	50°C	50°C	45°C	50°C	45°C	45°C	45°C
Storage Temperature Range	-20 to +60°C						
Dimensions (L x W x H)	3.94 x 1.57 x 1.57 in (100 x 40 x 40 mm)						

Free Space 532–1064 nm Specifications

	Excelsior One 532 Multi Mode	Excelsior One 532 Single Mode	Excelsior One 542	Excelsior One 553	Excelsior One 561	Excelsior One 594	Excelsior One 642	Excelsior One 785	Excelsior One 1064
Wavelength	532 nm	532 nm	542 nm	553 nm	561 nm	594 nm	642 ±3 nm	785 ±10 nm	1064 nm
Output Power	50 mW	50, 100, 150, 200 mW	50 mW	50 mW	20, 50, 75, 100 mW	30, 50, 100 mW	60, 100 mW	45 mW	500 mW
Longitudinal Mode	Multi	Single	Single	Single	Single	Multi	Multi	Multi	Single
Spectral Linewidth	<0.5 nm	<0.01 pm	<0.01 pm	<0.01 pm	<0.01 pm	<1 nm	<0.5 nm	<0.01 nm	<0.04 pm
Technology	DPSS	DPSS	DPSS	DPSS	DPSS	DPSS	Direct Diode	Direct Diode	DPSS
Beam Quality, TEM_{00}	<1.1	<1.1	<1.1	<1.1	<1.1	<1.2	<1.3	<1.3	<1.1
Beam Diameter ($1/e^2$)	0.7 ±0.07 mm								0.8 ±0.1 mm
Beam Divergence	<1.3 mrad	<1.3 mrad	<1.3 mrad	<1.2 mrad	<1.4 mrad	<1.5 mrad	<2.2 mrad	<2.7 mrad	<2.3 mrad
Beam Ellipticity	1 ±0.1					1 ±0.2	1 ±0.1		
Polarization Ratio	>100:1								
Beam Pointing Stability	<6 µrad/°C								
Noise (20 Hz – 20 MHz)	<0.5% rms	<0.2% rms	<0.2% rms	<0.3% rms	<0.2% rms	<1% rms	<0.2% rms	<0.2% rms	<0.2% rms
Power Stability (over 8 hours)	<±2%								
Warm-up Time	<5 min					<10 min	<5 min		
Beam Height	19 mm								
Operating Voltage	+5 VDC								
Maximum Power Consumption	<30 W	<30 W	<30 W	<35 W	<30 W	<35 W	<10 W	<10 W	<30 W
Operating Temperature	10 to 40°C (80% relative humidity)								
Maximum Laser Head Base Plate Temperature	45°C	45°C	45°C	45°C	45°C	45°C	50°C	50°C	45°C
Storage Temperature Range	-20 to +60°C								
Dimensions (L x W x H)	3.94 x 1.57 x 1.57 in (100 x 40 x 40 mm)					3.94 x 1.97 x 1.57 in (100 x 50 x 40 mm)	3.94 x 1.57 x 1.57 in (100 x 40 x 40 mm)		

Fiber Coupled 542–1064 nm Specifications

	Excelsior One 542-FC	Excelsior One 553-FC	Excelsior One 561-FC	Excelsior One 594-FC	Excelsior One 642-FC	Excelsior One 785-FC	Excelsior One 1064-FC
Wavelength	542 nm	553 nm	561 nm	594 nm	642 ±3 nm	785 ±10 nm	1064 nm
Output Power	40 mW	40 mW	50 mW	20, 40, 70 mW	70 mW	25 mW	100 mW
Longitudinal Mode	Single	Single	Single	Multi	Multi	Multi	Single
Spectral Linewidth	<0.01 pm	<0.01 pm	<0.01 pm	<1 nm	<0.5 nm	<0.01 nm	<0.04 pm
Technology	DPSS	DPSS	DPSS	DPSS	Direct Diode	Direct Diode	DPSS
Beam Quality, TEM_{00}	<1.1						
Power Stability (constant ambient temperature)	<±1.0% (over 8 hours)						
Power Stability vs Ambient Temperature Changes	<±3.0% (over 8 hours)						
Noise (20 Hz – 20 MHz)	<0.5 %			<1 %	<0.5 %		
Mode Field Diameter, typical	4.5 µm	4.6 µm	4.7 µm	5.0 µm	5.5 µm	5.0 ±0.9 µm	5.9±0.9 µm
Fiber Numerical Aperture (NA)	0.07–0.1						
Polarization Ratio	>100:1						
Polarization Orientation Tolerance (E-Vector)	90 ±4°						
Beam Ellipticity	1 ±0.1						
Warm-up Time	<5 min			<10 min	<5 min		
Fiber Length	1 m ±100 mm						
Fiber Connector	FC/APC or FC/AFC (optional)						
Fiber Jacket Type	ø3 mm PVC or SUS						
Operating Voltage	+5 VDC						
Maximum Power Consumption	<30 W	<35 W	<30 W	<35 W	<10 W	<10 W	<30 W
Operating Temperature	10 to 40°C (80% relative humidity)						
Maximum Laser Head Base Plate Temperature	45°C	45°C	45°C	45°C	50°C	50°C	45°C
Storage Temperature Range	-20 to +60°C						
Dimensions (L x W x H)	3.94 x 1.57 x 1.57 in (100 x 40 x 40 mm)			3.94 x 1.97 x 1.57 in (100 x 50 x 40 mm)	3.94 x 1.57 x 1.57 in (100 x 40 x 40 mm)		

Excelsior® One™ CW Lasers

Excelsior One Free Space Dimensions

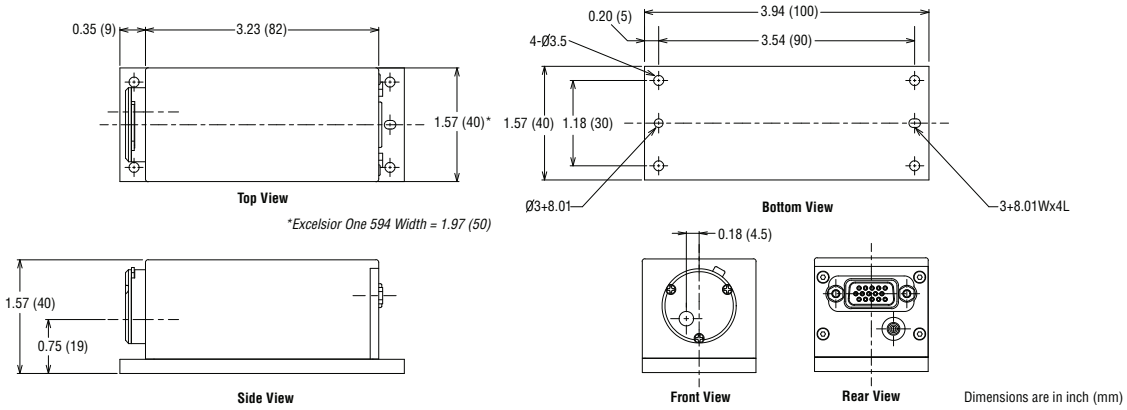

Dimensions are in inch (mm)

Excelsior One Fiber Coupled Dimensions

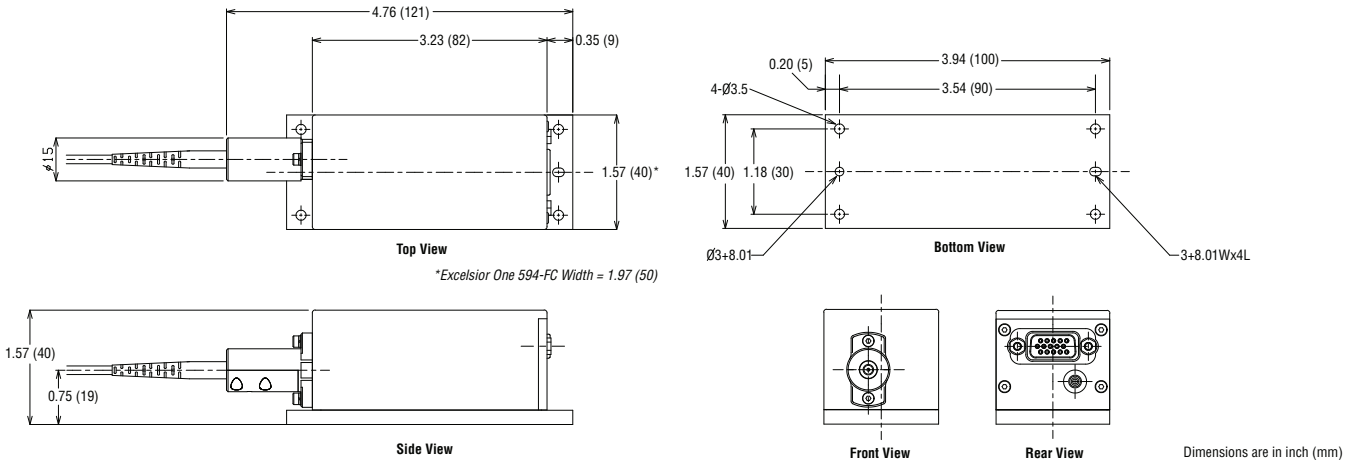

Dimensions are in inch (mm)

Spectra-Physics
A Newport Corporation Brand

www.newport.com/spectra-physics

3635 Peterson Way, Santa Clara, CA 95054, USA
PHONE: 1-800-775-5273 1-408-980-4300 FAX: 1-408-980-6923 EMAIL: sales@spectra-physics.com

	PHONE	EMAIL
Belgium	+32-(0)0800-11 257	belgium@newport.com
China	+86-10-6267-0065	china@newport.com
France	+33-(0)1-60-91-68-68	france@newport.com
Japan	+81-3-3794-5511	spectra-physics@splasers.co.jp
Taiwan	+886 -(0)2-2508-4977	sales@newport.com.tw

	PHONE	EMAIL
Irvine, CA, USA	+1-800-222-6440	sales@newport.com
Netherlands	+31-(0)30 6592111	netherlands@newport.com
United Kingdom	+44-1235-432-710	uk@newport.com
Germany / Austria / Switzerland	+49-(0)6151-708-0	germany@newport.com

Newport Corporation, Irvine and Santa Clara, California and Franklin, Massachusetts; Evry and Beaune-La-Rolande, France; Stahnsdorf, Germany and Wuxi, China have all been certified compliant with ISO 9001 by the British Standards Institution.

Newport Corporation, Global Headquarters
1791 Deere Avenue, Irvine, CA 92606, USA
PHONE: 1-800-222-6440 1-949-863-3144
EMAIL: sales@newport.com
Complete listings for all global office locations are available online at www.newport.com/contact

© 2013 Newport Corporation. All rights reserved. Excelsior, Spectra-Physics, the Spectra-Physics logo and the Newport logo are registered trademarks of Newport Corporation. One and It's in the Box are trademarks of Newport Corporation.

DS-06120 (04/13)