Turcon® Varilip® PDR



Turcon® Varilip® PDR

Introduction

Turcon® Varilip® PDR rotary shaft seals extend the boundaries imposed by elastomer radial shaft seals, utilizing advanced materials and design techniques to provide optimum sealing performance for each application. The outcome is a superior sealing solution, which retains a compact seal envelope.

Standard elastomeric rotary shaft seals have a limited application range with respect to temperature, surface speed, media compatibility, pressure or a combination of these due to the inherent limitations of the various elastomer grades. Furthermore they only have a limited suitability for applications with inadequate lubrication.

Turcon® Varilip® PDR rotary shaft seals are characterized in particular by the low friction and their stick-slip-free running, reducing the temperature generation and permitting higher peripheral speeds.

Turcon® has the characteristic of inherent memory, whereby a distorted Turcon® component will attempt to recover to the profile it had during the sintering cycle of its manufacturing process. This feature is used to provide the necessary radial loading of the sealing lip onto the shaft, negating the requirement for the energizing spring present in elastomeric seal designs.

Description

Turcon® Varilip® PDR seals are constructed from only two parts - a precision manufactured metal body and a mechanically retained Turcon® sealing element. Unlike seals with pressed metal cases, a gasket is not required to provide sealing between the lip and casing. This is provided by the mechanical retention of the lip, improving both the chemical resistance and temperature range of the sealing system.

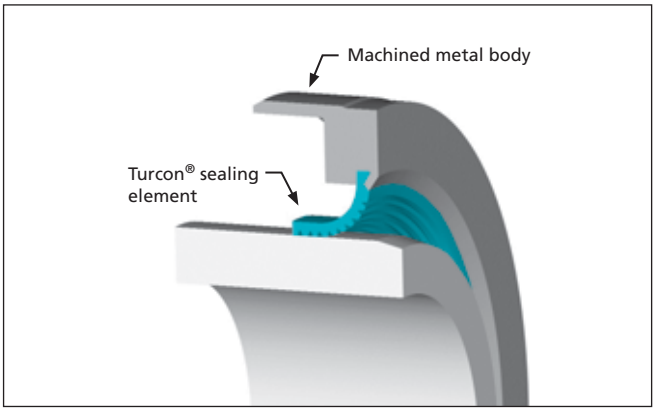

Figure 89 Turcon® Varilip® PDR seal

Where required, the Turcon® Varilip® PDR seal is available with a hydrodynamic feature on the Turcon® sealing lip. This provides a positive displacement of the fluid as a result of the shaft rotation to give improved sealing in applications where the shaft only rotates in a single direction. The feature also increases the flexibility of the lip, which allows a wider contact band between the Turcon® lip and the shaft and helps to reduce shaft load and associated wear temperature.

The mechanical retention of the Turcon® provides a robust product which also eliminates the sometimes environmentally hazardous process of bonding the Turcon® to a metal or elastomer substrate.

■ Turcon® Varilip® PDR Product Range

Table LXI Seal configurations

Seal	Description
Type A/Type 1 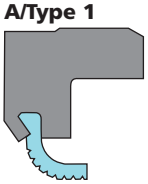	Type A - is a single lip seal suitable for use in standard industrial applications up to a pressure of 0.5 MPa (73 psi) where an elastomer radial shaft seal would be unable to withstand the temperature, friction, medium or poor lubrication. Allows sealing at surface speeds up to 90 m/s (17,721 ft/min) with sufficient cooling and lubrication of the sealing lip.
Type B/Type 3 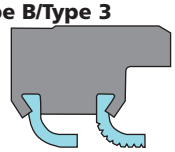	Type B - is the preferred choice for applications in which a high seal integrity is demanded or where contaminated media are to be sealed. This type offers a back-up sealing lip to provide secondary sealing. Pressure limit is 0.5 MPa (73 psi).
Type C/Type 4 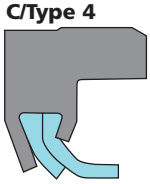	Type C - can be used for applications involving higher pressures for which a simple elastomer radial shaft seal can no longer be considered. Due to reinforcement of the sealing lip, pressures up to 1 MPa (145 psi) are possible, e.g. as pump, shaft or rotor seals.
Type D/Type 5 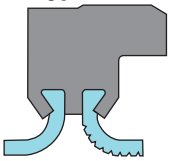	Type D - can be subjected to pressure from both sides. Pressure differential of up to 0.5 MPa (73 psi) is permissible. The separation of two different media using a single seal is possible. The second lip can also take on the function of a wiper or dust lip.
Type G/Type 6 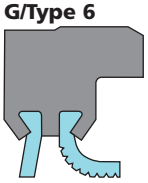	Type G - is similar to Type D but has a non-contacting environmental sealing element rather than a full lay-down lip. This provides effective sealing against the ingress of dust and dirt into the system while also ensuring torque and resulting power consumption are kept to a minimum.

Turcon® Varilip® PDR - Special designs

Apart from the standard range, Turcon® Varilip® PDR seals are available as special designs to satisfy the demands of specific applications and can accommodate non-standard housing and shaft sizes. Figures 90 to 93 show some of the special designs available.

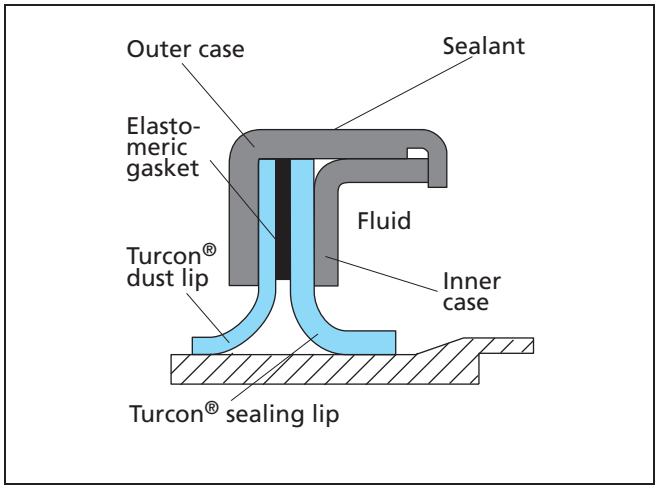

Figure 90 Clamped design

Suited to high volume applications with excessive housing tolerance

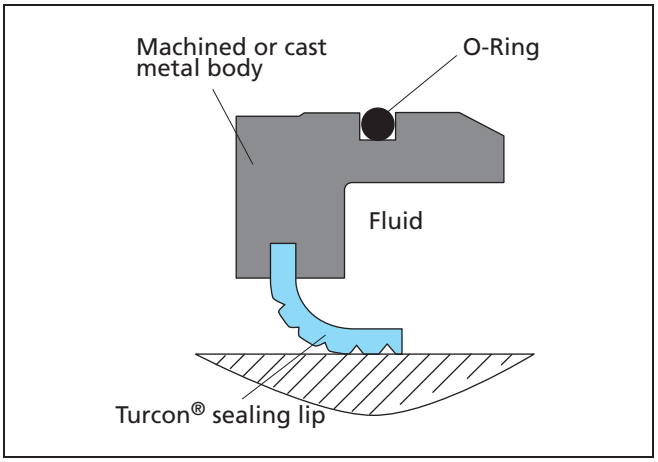

Figure 91 O-Ring design

For low interference fits in the housing

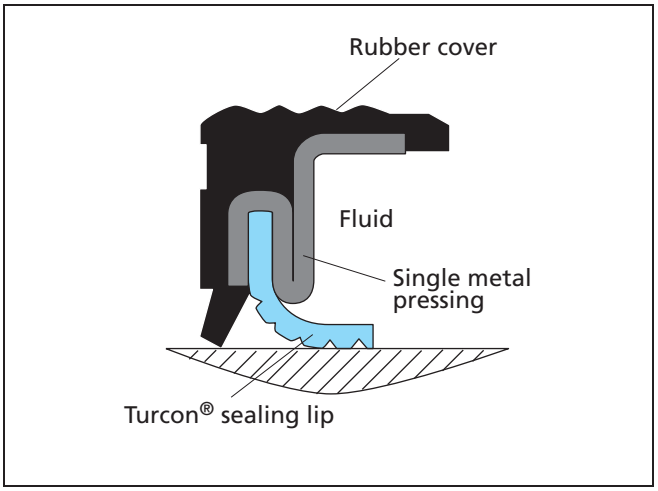

Figure 92 Single shell design

Rubber cover for poor housing surface finish at low press-in loads

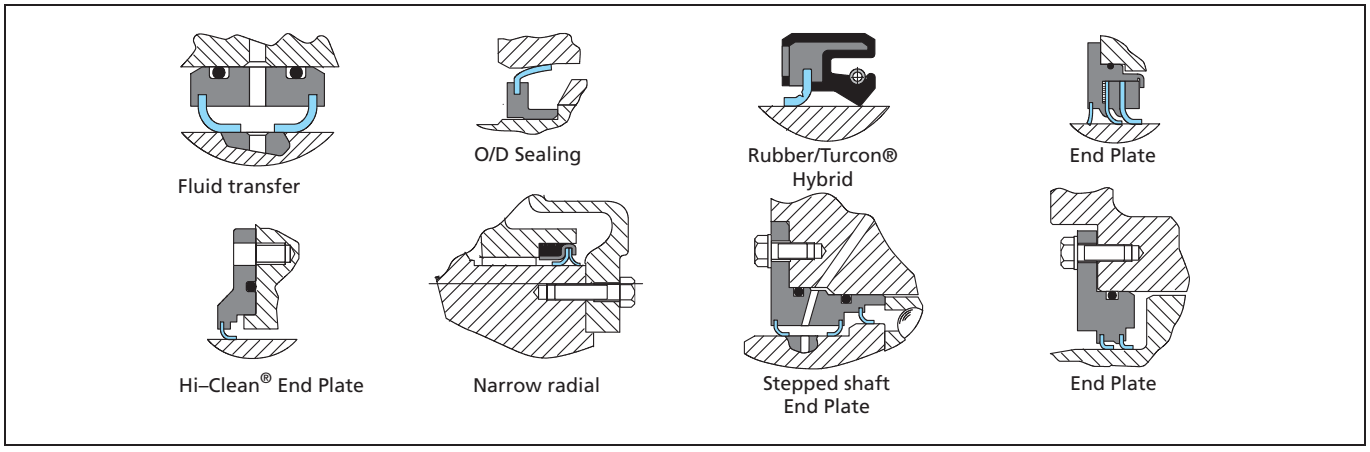

Figure 93 Variants

Materials

Sealing lip

An important factor for the proper function of rotary shaft seals is the material used for the sealing lip. For this reason, Trelleborg Sealing Solutions has developed a range of specially modified materials on the basis of the proven Turcon® materials. Particular importance is attached to the optimization of friction and wear properties, while providing excellent sealing performance, even at high peripheral speeds.

Table LXII gives the materials available for use in Turcon® Varilip® PDR seals. Additional compounds have been developed for specific applications and these are available on request.

Table LXII Sealing Element Materials

Material, Applications, Properties	Code	Operating temp.		Mating surface hardness	MPa/psi max.
		°C	°F		
Turcon® T25 Standard material with exceptional wear and friction characteristics. For lubricated running, e.g. oil, grease, glass fiber, lubricant Color: Grey	T25	-60 to +200	-76 to +392	Min. 55 HRc At low pressure and up to 4 m/s (788 fpm), min.45 HRc	2 MPa 290 psi
Turcon® T40 For all lubricating and non-lubricating fluids, especially water. Used for medium hard shafts in applications where there is risk of shaft wear. Carbon fiber Color: Grey	T40	-60 to +200	-76 to +392	Min. 30 HRc	2 MPa 290 psi
Turcon® T78 Particularly good running behavior permits use with dry running or poor lubrication and in conjunction with soft shaft surfaces e.g. stainless steel shafts in food, pharmaceutical and chemical industries. Aromatic polymer. Color: Tan to dark brown	T78	-60 to +200	-76 to +392	Min. 55 HB	0.2 MPa 29 psi
Turcon® M83 Specially designed for dry-running applications. Particularly good results in applications for the semicon industry. Can also be used lubricated. Glass fiber, pigment Color: Yellow	M83	-60 to +200	-76 to +392	Min. 55 HRc	2 MPa 290 psi

Other Turcon® materials are available by using the relevant material code when ordering. FDA compliant materials available on request.

Metal body

Turcon® Varilip® PDR seals are available with a preferred material choice of Stainless Steel 304L. Other materials such as Stainless Steel 316L and Zinc-Plated Mild Steel are available within the standard range. Table LXIII shows the codes for these materials. Other specialized materials are available on request. It should be noted that any material other than Stainless Steel 304L will result in extended lead-time due to stocking and / or additional process issues.

Table LXIII Metal Body Materials

Code	Material
1	Stainless Steel 304
2	Stainless Steel 316
3	Unavailable
4	Mild Steel (Zinc Plated)
5	Aluminum

Highlighted materials are preferred.

Technical Data

Speed

The graph in Figure 94 shows the superior surface speed capability of Turcon® Varilip® PDR compared to elastomeric shaft seals.

The operating speed directly impacts the temperature generated by the seal and is an important factor when considering the requirements for the sealing system.

The actual limiting speed will depend on the temperature, pressure, media, lubrication properties, heat dissipation and the shaft condition.

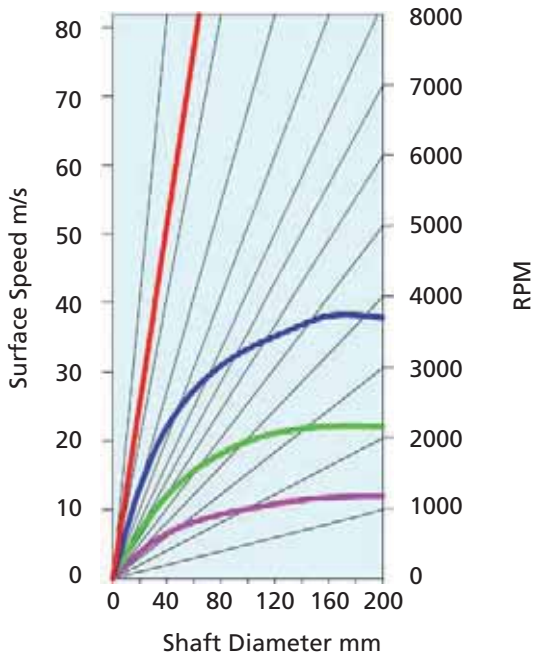

Figure 94 Surface speed as a function of shaft diameter and RPM

Table LXIV Surface Speed

General Recommended maximum Surface Speed			
Turcon® Varilip® PDR		100 m/s	19,680 ft/min
Fluoroelastomer		38 m/s	7,500 ft/min
Silicone		38 m/s	7,500 ft/min
Polyacrylic		22 m/s	4,320 ft/min
Nitrile		12 m/s	2.340 ft/min

Speed capability depends on application conditions

Temperature

All Turcon® Varilip® PDR seals are capable of outstanding high and low temperature performance compared to elastomeric materials.

Unlike other PTFE lip seals the Turcon® Varilip® PDR seal is not limited in its temperature performance by the presence of an elastomer gasket. This gives it excellent temperature range capability.

The temperatures in Figure 95 are general working limits of the seal material, and in all cases the effective limit for a rotary shaft seal application would be much lower.

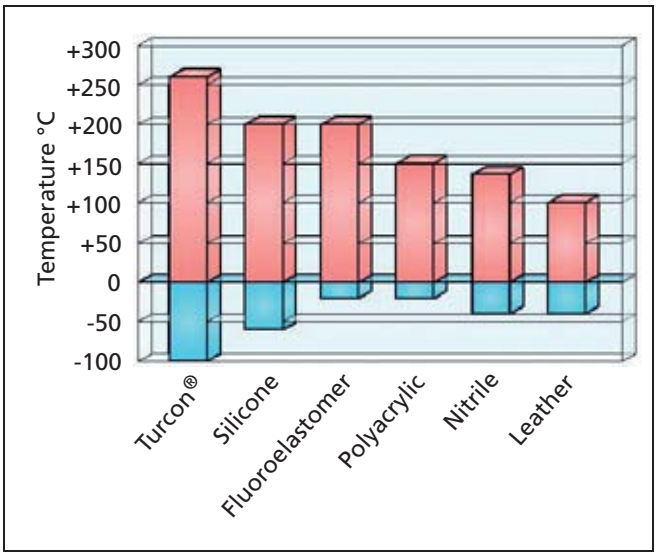

Figure 95 Maximum and minimum temperatures for different materials

Table LXV Temperature

General Recommended minimum / maximum temperature		
Filled PTFE	-100 to +260°C	-148 to +500°F
Fluoroelastomer	-20 to +200°C	-4 to +392°F
Silicone	-60 to +200°C	-76 to +392°F
Polyacrylic	-20 to +150°C	-4 to +300°F
Nitrile	-40 to +135°C	-40 to +275°F
Leather	-40 to +100°C	-40 to +212°F

Pressure

Turcon® Varilip® PDR Types A, B, D and G are suitable for pressures up to 0.5 Mpa (73 psi). Type C provides a double sealing lip design for pressures up tp 1 Mpa (145 psi).

Pressure heavily influences the contact force between the Turcon® lip and the shaft and consequently the heat generation. This must be taken into consideration when selecting the appropriate seal type.

Turcon® Varilip® PDR seals can remain leak tight when exposed to pressurization during static shaft conditions.

Fluid resistance

Turcon® consists of fully substituted carbon-carbon chains and the resulting carbon-fluorine bonds are among the strongest known in organic chemistry. The outstanding physical and chemical properties of Turcon® can be attributed to these strong bonds.

Turcon® Varilip® PDR seals are resistant to mineral acids, bases, common organic fluids and solvents. They are also unaffected by oxidation, ultraviolet radiation or ozone, making them ideally suited for use in the chemical industry and applications requiring exposure to the atmosphere.

A particular benefit of Turcon® Varilip® PDR seals is a resistance to oil additives and biofuels, which have an adverse effect on many elastomers. Using Turcon® shaft seals allows the increased use of additives and a longer oil service life.

Many Turcon® materials have been successfully tested in 20 percent Fluorine gas at temperatures in excess of 250°C (482°F).

Lubrication starvation

Turcon® Varilip® PDR shaft seals have the capability to run without lubrication for longer periods of time compared with elastomer shaft seals without adversely affecting their ultimate life. This not only allows them to be used in applications where the lubrication may be intermittent as a result of start up or other operating factors, but also allows their use as effective dirt, dust and powder seals.

Note: Higher speeds and pressure capabilities can be achieved through the use of custom designs. Please consult your local Trelleborg Sealing Solutions markting company.

Power consumption

One of the key features of Turcon® Varilip® PDR is its low friction, resulting in very low power consumption.

Figure 96 shows the running torque for a 40 mm (1.73 in) shaft diameter Turcon® Varilip® PDR seal.

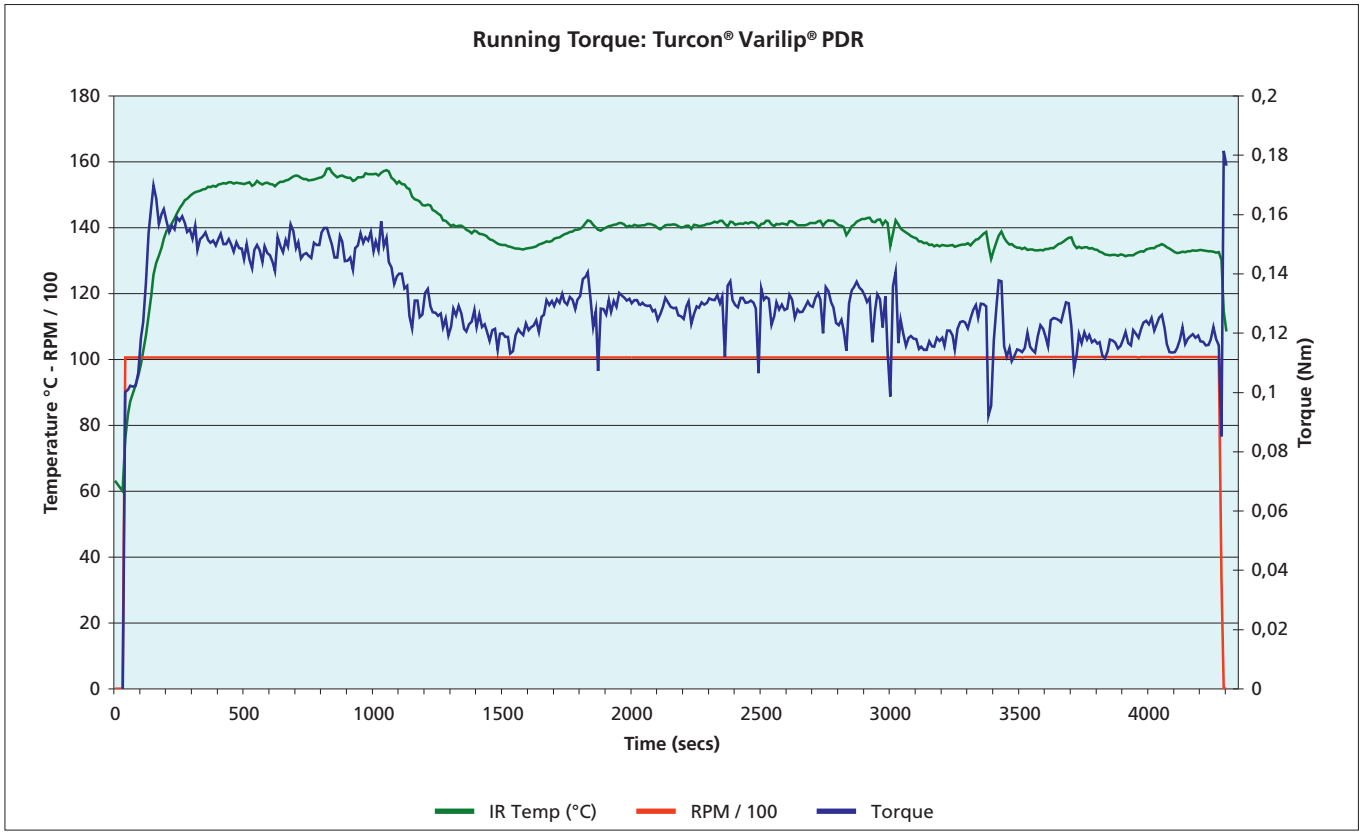

Figure 96 Running torque for Turcon® Varilip® PDR seal

Reduced torque can be achieved through custom designs but may reduce leak tightness.

Note: Results may vary according to application and conditions.

Endurance



Turcon® Varilip® PDR rotary shaft seals can provide extended service life compared with elastomer shaft seals. As with any seal, however, the life of a Turcon® Varilip® PDR seal depends on the specific operating parameters.

PTFE is an inherently stable material and does not suffer from aging or degradation as with elastomers.

Eccentricity

The graph in Figure 97 shows the maximum recommended operating envelope for silicone, nitrile, polyacrylic and fluoroelastomer seals. Turcon® Varilip® PDR seals have a specific lip design to minimize the risk of leakage and increased wear rates. Therefore the levels of eccentricity should be kept within the limits shown. In order to achieve a uniform radial load of the sealing lip on the shaft, the best possible coaxiality, or static offset should be maintained between the housing bore and the shaft, as shown in Figure 98.

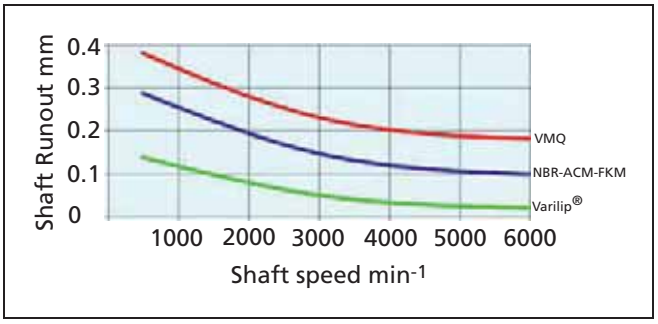

Figure 97 Dynamic eccentricity capability

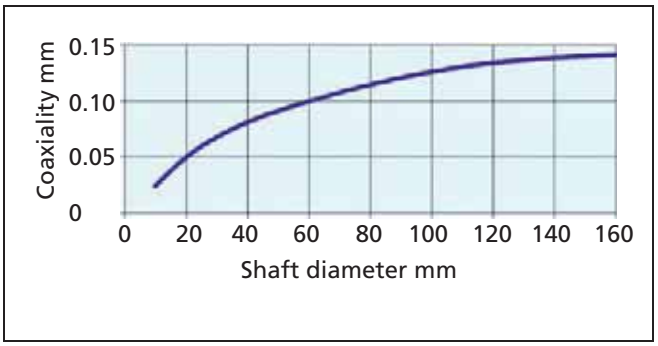

Figure 98 Coaxial tolerance capability

Leakage expectation

The hydrodynamic feature available on Turcon® Varilip® PDR helps to ensure improved leak tightness compared to other PTFE lip seals. Note that seals with hydrodynamic features must be used only in one direction.

The following graphs show the results obtained from 200 hour tests. These tests compared the leakage performance of the Turcon® Varilip® PDR seal against two competitors' PTFE lip seals. The results obtained are shown below.

Figure 99 details the leakage rate measured at regular intervals throughout the test. Figure 100 plots a cumulative graph to indicate total leakage. It can be noted that the Turcon® Varilip® PDR outperforms the two competitor seals with regard to leakage performance.

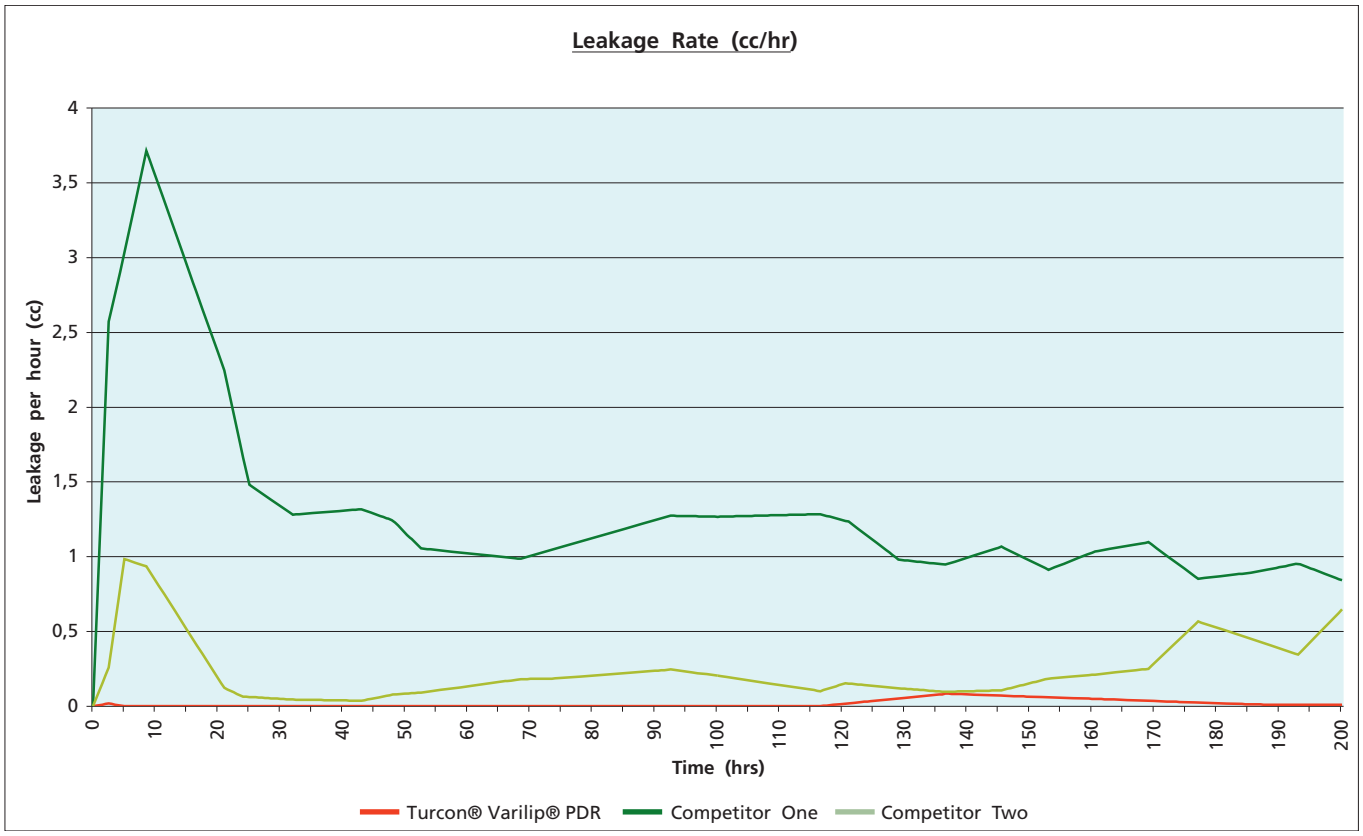

Figure 99 Leakage rate per hour monitored over 200 hour tests (average results)

Turcon® Varilip® PDR seals sometimes need a short bedding-in period before optimal sealing is provided depending on shaft topography. Once the run band is established, wear rates slow to provide good seal life.

Note: Results may vary according to application and conditions.

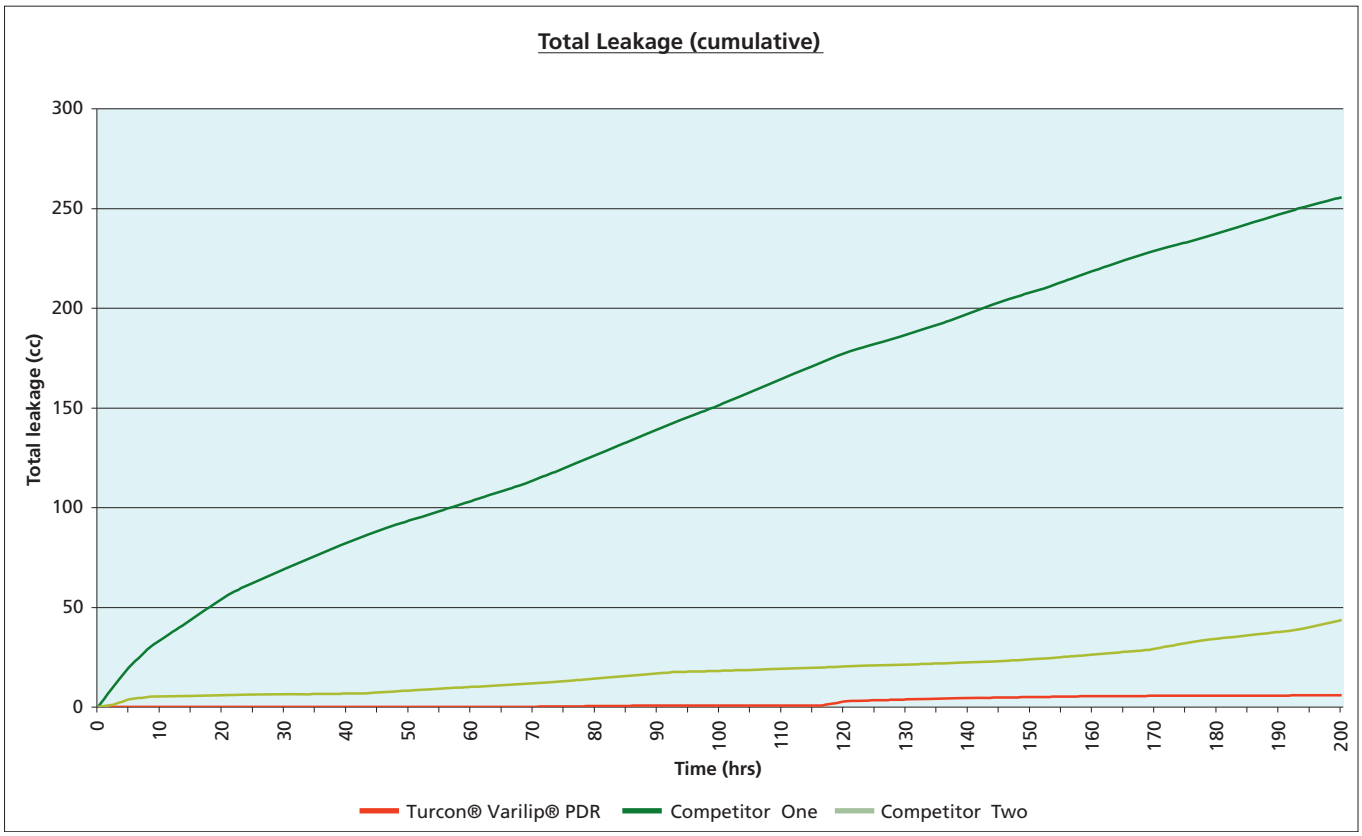

Figure 100 Total leakage (cumulative) monitored over 200 hour tests (average results)

Note: Results may vary according to application and conditions.

Heat generation considerations

All Turcon® Varilip® PDR seals are designed to contact the shaft surface during operation. The contact force between the sealing lip and the shaft will depend on the seal design used and the application details, but in all cases a temperature increase due to the presence of the seal can be expected. Where this increase is likely to be significant, consideration should be given to methods of reducing the level of generated heat. This can be achieved through increases in localized cooling, improved lubrication and efficient heat transfer and dissipation mechanisms.

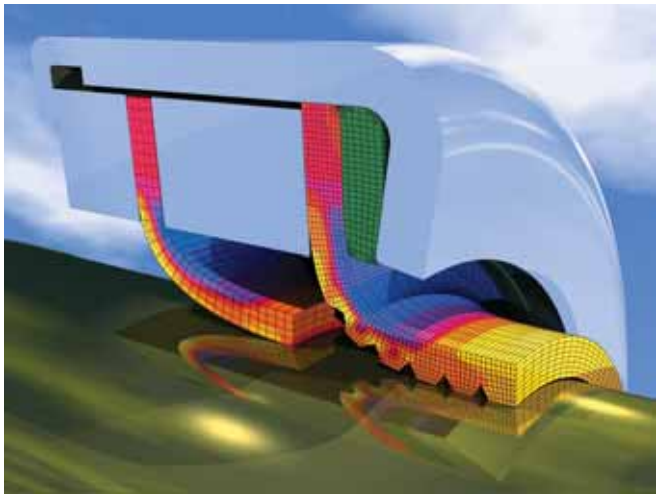

Shaft wear

Turcon® Varilip® PDR seals are designed to contact the shaft surface during operation and a seal contact band will be evident in the majority of applications. With correct seal specification and operating conditions, shaft wear should be limited to a light polishing, but factors such as over pressure, contamination, eccentricity or insufficient shaft hardness can result in more significant wear.

As part of the system design, consideration should be given to the level of shaft wear permissible within a set operating period, and therefore the benefits of measures intended to reduce the rate of wear, such as shaft coatings, can be analyzed in relation to their additional cost.

■ Design Guidelines

Housing

Turcon® Varilip® PDR seals are designed to meet global standards, including ISO 6194/1 and ISO 16589. (See tables LXX and LXXI).

Turcon® Varilip® PDR seals require an interference fit with the housing bore to provide both adequate sealing of this interface and to ensure that the seal remains in place when subjected to pressure, axial movement and induced torsion produced by the relative rotary motion of shaft to housing bore. The bore should be machined with an H8 diametric tolerance as reproduced in table LXVI below. System design should also ensure that Turcon® Varilip® PDR seals are not pushed into bores that may have been previously scored by the assembly of another component, (such as a bearing), selecting a larger seal outer diameter if necessary.

For Turcon® Varilip® PDR seals the bore should have a surface finish of 0.8µm (32 µin) Ra maximum. In cases where the housing bore is split resulting in an axial joint crossing the seal outer diameter, and in cases where meeting these surface finish requirements is not possible, it is recommended that a proprietary sealant or adhesive is used.

Alternatively a custom solution can be prepared employing a rubber covering or O-Ring for OD sealing.

Table LXVI Housing Installation Data Table

Bore diameter				Tolerance	
Over		To		H8 [mm]	x10^{-3}[in]
mm	in	mm	in		
10	0.394	18	0.787	+.027 -0	0.0011
18	0.787	30	1.181	+.033 -0	0.0013
30	1.181	50	1.969	+.039 -0	0.0015
50	1.969	80	3.150	+.046 -0	0.0018
80	3.150	120	4.724	+.054 -0	0.0021
120	4.724	180	7.087	+.063 -0	0.0025
180	7.087	250	9.843	+.072 -0	0.0028
250	9.843	315	12.402	+.081 -0	0.0032
315	12.402	400	15.748	+.089 -0	0.0035

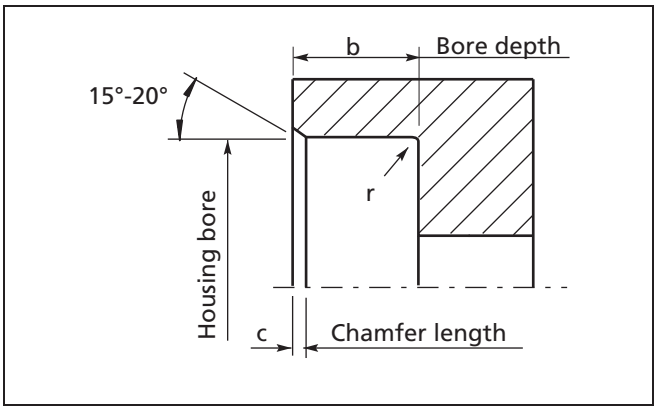

Figure 101 Housing design schematic

Table LXVII Housing Design Data

Seal width	Up to 10 [mm] / 0.394 in	Over 10 [mm] / 0.394 in
Min. bore depth (b)	b + 0.5 (0.0197 in)	b + 1.0 (0.0394 in)
Chamfer length (c)	0.70 to 1.00 (0.028 in to 0.04 in)	1.20 to 1.50 (0.047 in to 0.06 in)
Max. corner rad. (r)	0.40 (0.0157 in)	0.40 (0.0157 in)

Shaft

This should be machined to an h11 tolerance or better, reproduced in Table LXVIII. The surface finish should be prepared by plunge grinding to avoid any machining leads that may act with the shaft rotation to facilitate leakage.

The recommended surface finish for Turcon® Varilip® PDR seals is 0.2 to 0.4 µm (8-16 µin) Ra.

Table LXVIII Shaft Installation Data

Shaft diameter				Tolerance	
Over		To		h11 [mm]	h11 [in]
mm	in	mm	in		
6	0.236	10	0.394	+0 -.900	+0 -0.0035
10	0.394	18	0.787	+0 -.110	+0 -0.0043
18	0.787	30	1.181	+0 -.130	+0 -0.0051
30	1.181	50	1.969	+0 -.160	+0 -0.0063
50	1.969	80	3.150	+0 -.190	+0 -0.0075
80	3.150	120	4.724	+0 -.220	+0 -0.0087
120	4.724	180	7.087	+0 -.250	+0 -0.0098
180	7.087	250	9.843	+0 -.290	+0 -0.0114
250	9.843	315	12.402	+0 -.320	+0 -0.0126
315	12.402	400	15.748	+0 -.360	+0 -0.0142

A shaft hardness in excess of 55 HRc is generally recommended for Turcon® Varilip® PDR, although lower values are permissible depending on the pressure, speed and sealing lip material used (refer to materials section).

Titanium shafts should be avoided unless nitrided. Shafts with good chrome, nickel or zinc plating, properly finished, are acceptable. Certain ceramic coatings can also be used, although some grades have been proven to result in an aggressive wear of the sealing lip due to their open structure. In certain applications it may not be possible to provide a shaft with the necessary hardness, surface finish and corrosion resistance. Fitting a wear sleeve onto the shaft can solve this problem by providing the local hardness and surface requirement without affecting the main shaft. If wear should occur, only the sleeve need then be replaced. The surface finish of the sleeve should be as outlined above and consideration should be given to adequate heat dissipation and effective sealing of the interface between the wear sleeve and the shaft.



■ Installation Requirements

When installing Turcon® Varilip® PDR seals, careful handling is important in order to avoid damaging the sealing lip. If the seal is installed from the back, radii or lead-in chamfers must be machined on the end of the shaft. This must also be free from burrs, sharp corners or rough machining marks, as shown in Figure 102.

When installing the seal with the lip against the shaft end, a lead-in chamfer is required whose smallest diameter is smaller than the unstressed diameter of the sealing lip as shown Figure 103. Table LXVIV shows guide values for this.

It is recommended that as shallow an angle as practical be adopted within the range given.

Table LXIX Shaft lead-in chamfer

d1 [mm]	d1 [in]	d1-d2 [mm]	d1-d2 [in]
< 10	0.4	1.5	0.06
10 - 20	0.4 - 0.8	2.0	0.08
20 - 30	0.8 - 1.2	2.5	0.10
30 - 40	1.2 - 1.6	3.0	0.12
40 - 50	1.6 - 2.0	3.5	0.14
50 - 70	2.0 - 2.8	4.0	0.16
70 - 95	2.8 - 3.7	4.5	0.18
95 - 130	3.7 - 5.1	5.5	0.22
130 - 240	5.1 - 9.4	7.0	0.28
240 - 300	9.4 - 11.8	11.0	0.43

Preferable is the use of an installation cone, as shown in Figure 16, where the seal can be fitted onto the cone before being located on the shaft to ensure correct orientation of the sealing lip.

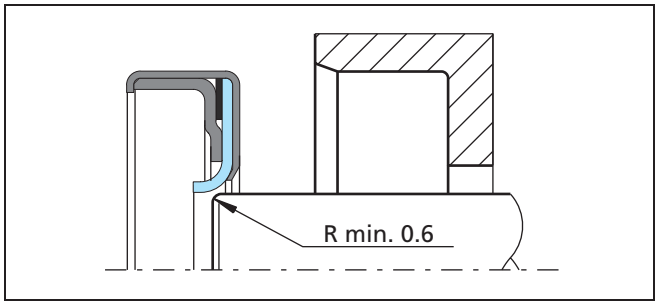

Figure 102 Installation of the sealing lip with the back to the shaft for pressurized application

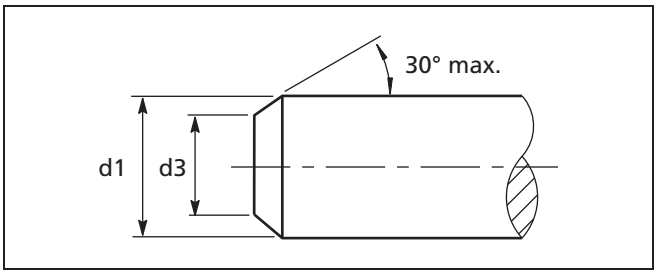

Figure 103 Shaft lead-in chamfer

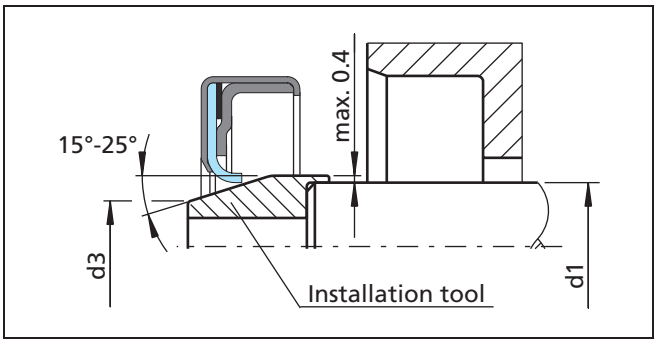

Figure 104 Fitting the sealing lip using an installation tool

Fitting should be performed in a swift movement to limit the time that the lip is formed above shaft size, therefore reducing lip recovery needed.

■ Packaging

Single and low quantities of Turcon® Varilip® PDR seals will be supplied in a blister pack with an individual transport mandrel. This mandrel will pre-form the element to above its free diameter, but below the intended shaft diameter. This assists in ease of installation, while also ensuring the element is not over-formed or damaged in transit.

Larger quantities of Turcon® Varilip® PDR seals will be supplied in a tube-and-end cap configuration.

■ Storage

Turcon® Varilip® PDR seals do not require any special storage conditions, unlike elastomer seals which must be kept away from sunlight and elevated temperatures to avoid rubber degradations.

Turcon® Varilip® PDR seals are not subject to shelf life.

Fitting Instructions

Investigation of premature failures has shown that a significant proportion are a result of inappropriate installation techniques. However, by observing the following guidelines, such failures can be avoided:

- Assembly sleeves and fitting tools should be regularly checked for signs of damage.
- When supplied on mandrels the seals should not be removed from the mandrel until immediately prior to fitting. Seals supplied on cardboard mandrels should be removed in the direction such that the spiral paper overlay of the mandrel is not lifted.
- Turcon® Varilip® PDR seals should be assembled on the shaft in an non-lubricated (dry) condition to avoid contamination of the hydrodynamic feature (if present).
- Care should be taken not to damage the outer diameter surface of the seal.
- Seals should be pressed squarely into the housing with the pressing-in force applied as close as possible to the outside diameter of the seal.
- If the seal contains a hydrodynamic feature on the sealing lip, ensure that it is correctly oriented in relation to the shaft's direction of rotation.
- Normal practice is to install the seal with the lip facing the medium to be sealed (the seal is reversed only when it becomes more important to exclude a medium than to retain it).
- Proprietary sealants or adhesives may be used for improved sealing of the outer diameter in critical applications or for seal retention purposes.

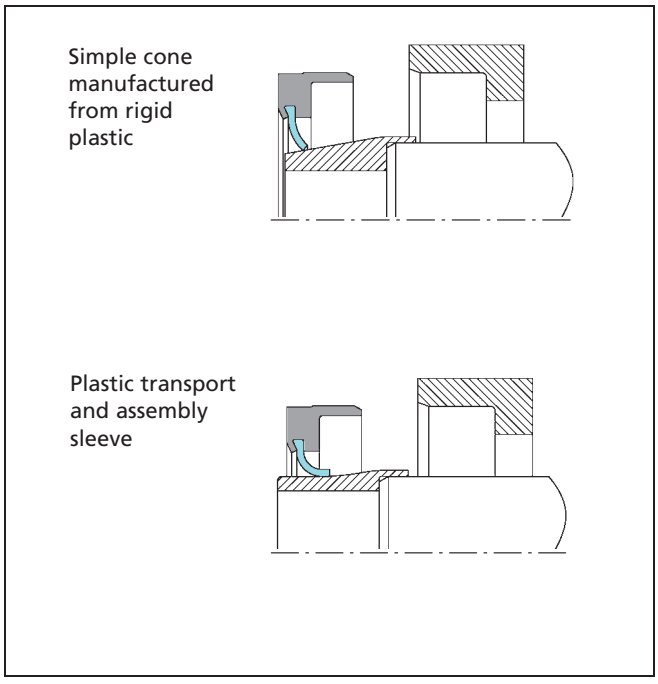

Figure 105 Assembly techniques

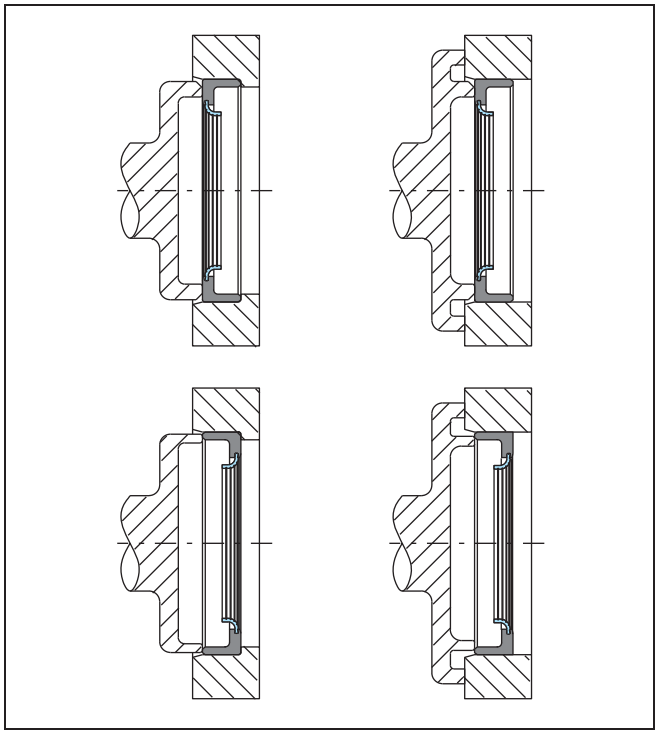

Figure 106 Assembly techniques

■ Installation Recommendations

The following diagrams show installation recommendations in respect to seal retention under pressure conditions.

Post installation recommendations:

If painting, be sure to mask the seal. Avoid getting paint on the lip or the shaft where the lip rides. Also, mask any vents or drain holes so they will not become clogged. Be sure to remove masks before operating unit.

If paint is to be baked, or the mechanism is otherwise subjected to heat, seals should not be heated to temperatures higher than their materials can tolerate.

In cleaning or testing, do not subject seals to any fluids or pressures other than those for which the seals have been specified.

Extraction features such as tapped holes, internal threads or simple grooves can be included in custom PDR designs.

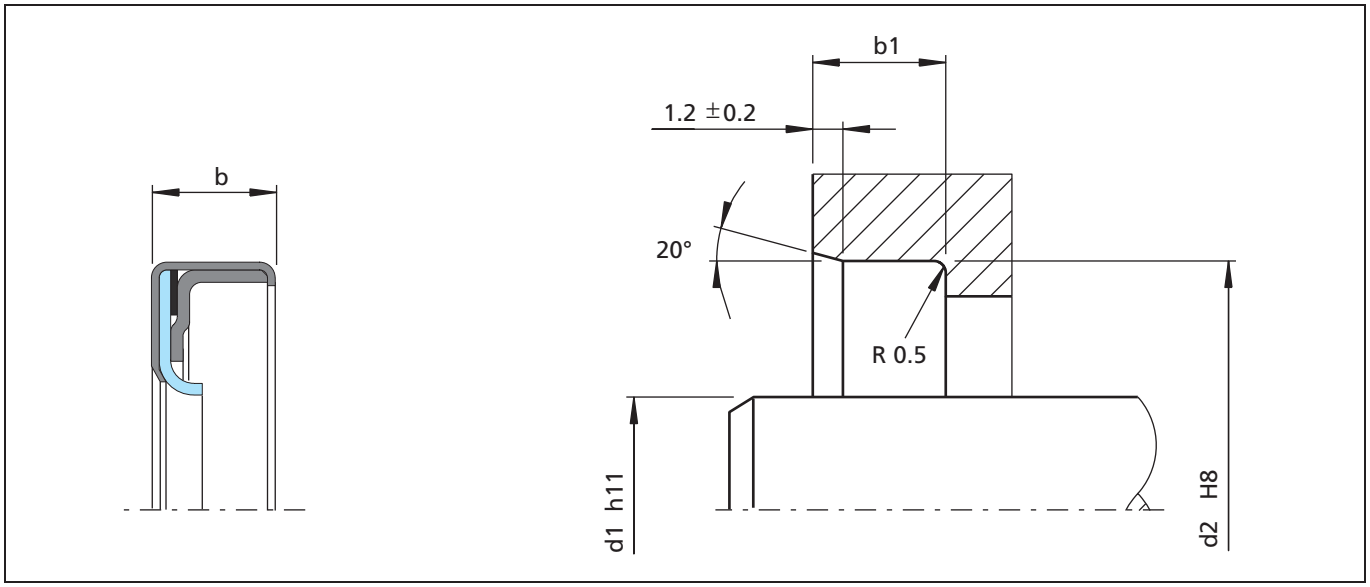

Figure 107 Installation drawing for pressure up to 0.5 MPa (73 psi)

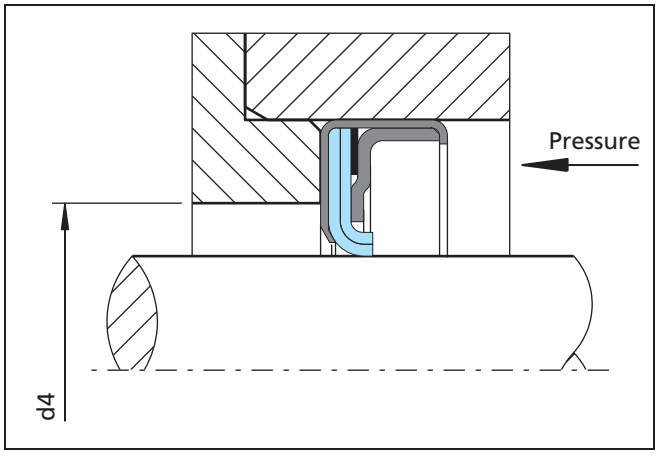

Figure 108 Installation for pressure from 0.5 MPa (73 psi) up to 1 MPa (145 psi)

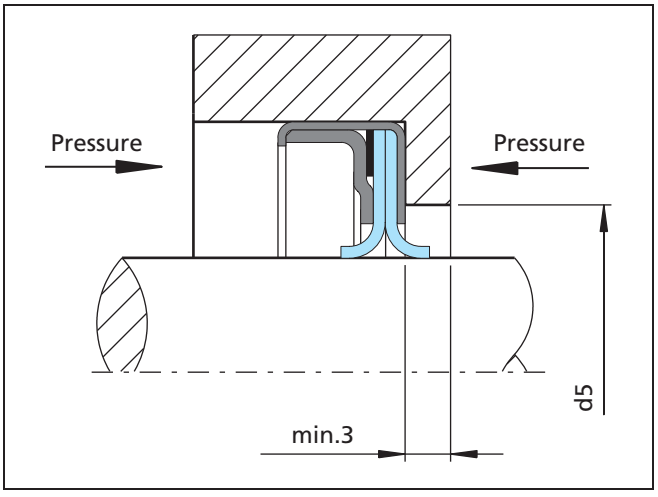

Figure 109 Installation type for fluid separation at pressures up to 1.0 MPa (145 psi)

■ Turcon® Varilip® PDR Size Ranges

Table LXX Turcon® Varilip® PDR Metric Size Range

Sizes				TSS Part No.	Sizes		
d1 [mm]	d2 [mm]	b [mm] exc. TJB	b [mm] TJB		b1 min. [mm]	d4 max. [mm]	d5 min. [mm]
6	16	7	10	TJ_1_0060	7.3 / 10.3	10	9.6
6	22	7	10	TJ_2_0060	7.3 / 10.3	10	9.6
7	22	7	10	TJ_1_0070	7.3 / 10.3	11	10.6
8	22	7	10	TJ_1_0080	7.3 / 10.3	12	11.6
8	24	7	10	TJ_2_0080	7.3 / 10.3	12	11.6
9	22	7	10	TJ_1_0090	7.3 / 10.3	13	12.6
9	24	7	10	TJ_2_0090	7.3 / 10.3	13	12.6
9	26	7	10	TJ_3_0090	7.3 / 10.3	13	12.6
10	22	7	10	TJ_1_0100	7.3 / 10.3	14	13.6
10	24	7	10	TJ_2_0100	7.3 / 10.3	14	13.6
10	**25**	**7**	**10**	**TJ_3_0100**	**7.3 / 10.3**	**14**	**13.6**
10	26	7	10	TJ_4_0100	7.3 / 10.3	14	13.6
11	22	7	10	TJ_1_0110	7.3 / 10.3	15	14.6
11	26	7	10	TJ_2_0110	7.3 / 10.3	15	14.6
12	22	7	10	TJ_1_0120	7.3 / 10.3	16	15.6
12	24	7	10	TJ_2_0120	7.3 / 10.3	16	15.6
12	**25**	**7**	**10**	**TJ_3_0120**	**7.3 / 10.3**	**16**	**15.6**
12	28	7	10	TJ_4_0120	7.3 / 10.3	16	15.6
12	30	7	10	TJ_5_0120	7.3 / 10.3	16	15.6
14	24	7	10	TJ_1_0140	7.3 / 10.3	18	17.6
14	28	7	10	TJ_2_0140	7.3 / 10.3	18	17.6
14	30	7	10	TJ_3_0140	7.3 / 10.3	18	17.6
14	35	7	10	TJ_4_0140	7.3 / 10.3	18	17.6
15	26	7	10	TJ_1_0150	7.3 / 10.3	19	18.6
15	**30**	**7**	**10**	**TJ_2_0150**	**7.3 / 10.3**	**19**	**18.6**
15	32	7	10	TJ_3_0150	7.3 / 10.3	19	18.6
15	35	7	10	TJ_4_0150	7.3 / 10.3	19	18.6
16	28	7	10	TJ_1_0160	7.3 / 10.3	20	19.6
16	30	7	10	TJ_2_0160	7.3 / 10.3	20	19.6
16	32	7	10	TJ_3_0160	7.3 / 10.3	20	19.6
16	35	7	10	TJ_4_0160	7.3 / 10.3	20	19.6
17	28	7	10	TJ_1_0170	7.3 / 10.3	21	20.6
17	30	7	10	TJ_2_0170	7.3 / 10.3	21	20.6
17	32	7	10	TJ_3_0170	7.3 / 10.3	21	20.6
17	35	7	10	TJ_4_0170	7.3 / 10.3	21	20.6
17	40	7	10	TJ_5_0170	7.3 / 10.3	21	20.6
18	**30**	**7**	**10**	**TJ_1_0180**	**7.3 / 10.3**	**22**	**21.6**
18	32	7	10	TJ_2_0180	7.3 / 10.3	22	21.6
18	35	7	10	TJ_3_0180	7.3 / 10.3	22	21.6
18	40	7	10	TJ_4_0180	7.3 / 10.3	22	21.6
20	30	7	10	TJ_1_0200	7.3 / 10.3	24	23.6
20	32	7	10	TJ_2_0200	7.3 / 10.3	24	23.6
20	**35**	**7**	**10**	**TJ_3_0200**	**7.3 / 10.3**	**24**	**23.6**
20	40	7	10	TJ_4_0200	7.3 / 10.3	24	23.6
20	47	7	10	TJ_5_0200	7.3 / 10.3	24	23.6

Sealing lips may, in some cases, protrude beyond the edge of the seal body.
Sizes printed in **bold** are preferred. Sizes not stated on these tables are available on request (note this will include a tooling charge).

Sizes				TSS Part No.	Sizes		
d1 [mm]	d2 [mm]	b [mm] exc. TJB	b [mm] TJB		b1 min. [mm]	d4 max. [mm]	d5 min. [mm]
22	32	7	10	TJ_1_0220	7.3 / 10.3	26	25.6
22	**35**	**7**	**10**	**TJ_2_0220**	**7.3 / 10.3**	**26**	**25.6**
22	40	7	10	TJ_3_0220	7.3 / 10.3	26	25.6
22	47	7	10	TJ_4_0220	7.3 / 10.3	26	25.6
24	35	7	10	TJ_1_0240	7.3 / 10.3	28	27.6
24	37	7	10	TJ_2_0240	7.3 / 10.3	28	27.6
24	40	7	10	TJ_3_0240	7.3 / 10.3	28	27.6
24	47	7	10	TJ_4_0240	7.3 / 10.3	28	27.6
25	35	7	10	TJ_1_0250	7.3 / 10.3	29	28.6
25	40	7	10	TJ_2_0250	7.3 / 10.3	29	28.6
25	42	7	10	TJ_3_0250	7.3 / 10.3	29	28.6
25	**47**	**7**	**10**	**TJ_4_0250**	**7.3 / 10.3**	**29**	**28.6**
25	52	7	10	TJ_5_0250	7.3 / 10.3	29	28.6
26	37	7	10	TJ_1_0260	7.3 / 10.3	30	29.6
26	42	7	10	TJ_2_0260	7.3 / 10.3	30	29.6
26	47	7	10	TJ_3_0260	7.3 / 10.3	30	29.6
28	40	7	10	TJ_1_0280	7.3 / 10.3	32	31.6
28	**47**	**7**	**10**	**TJ_2_0280**	**7.3 / 10.3**	**32**	**31.6**
28	52	7	10	TJ_3_0280	7.3 / 10.3	32	31.6
30	40	7	10	TJ_1_0300	7.3 / 10.3	34	33.6
30	42	7	10	TJ_2_0300	7.3 / 10.3	34	33.6
30	**47**	**7**	**10**	**TJ_3_0300**	**7.3 / 10.3**	**34**	**33.6**
30	52	7	10	TJ_4_0300	7.3 / 10.3	34	33.6
30	62	7	10	TJ_5_0300	7.3 / 10.3	34	33.6
32	45	7	10	TJ_1_0320	7.3 / 10.3	36	35.6
32	45	8	10	TJ_2_0320	8.3 / 10.3	36	35.6
32	**47**	**7**	**10**	**TJ_3_0320**	**7.3 / 10.3**	**36**	**35.6**
32	47	8	10	TJ_4_0320	8.3 / 10.3	36	35.6
32	52	7	10	TJ_5_0320	7.3 / 10.3	36	35.6
32	52	8	10	TJ_6_0320	8.3 / 10.3	36	35.6
35	**47**	**7**	**10**	**TJ_1_0350**	**7.3 / 10.3**	**39**	**38.6**
35	50	7	10	TJ_2_0350	7.3 / 10.3	39	38.6
35	50	8	10	TJ_3_0350	8.3 / 10.3	39	38.6
35	52	7	10	TJ_4_0350	7.3 / 10.3	39	38.6
35	52	8	10	TJ_5_0350	8.3 / 10.3	39	38.6
35	55	8	10	TJ_6_0350	8.3 / 10.3	39	38.6
35	62	7	10	TJ_7_0350	7.3 / 10.3	39	38.6
36	47	7	10	TJ_1_0360	7.3 / 10.3	40	39.6
36	50	7	10	TJ_2_0360	7.3 / 10.3	40	39.6
36	52	7	10	TJ_3_0360	7.3 / 10.3	40	39.6
36	62	7	10	TJ_4_0360	7.3 / 10.3	40	39.6
38	52	7	10	TJ_1_0380	7.3 / 10.3	42	41.6
38	55	7	10	TJ_2_0380	7.3 / 10.3	42	41.6
38	55	8	10	TJ_3_0380	8.3 / 10.3	42	41.6
38	58	8	10	TJ_4_0380	8.3 / 10.3	42	41.6
38	62	7	10	TJ_5_0380	7.3 / 10.3	42	41.6
38	62	8	10	TJ_6_0380	8.3 / 10.3	42	41.6
40	52	7	10	TJ_1_0400	7.3 / 10.3	44	43.6
40	55	7	10	TJ_2_0400	7.3 / 10.3	44	43.6
40	55	8	10	TJ_3_0400	8.3 / 10.3	44	43.6
40	**62**	**7**	**10**	**TJ_4_0400**	**7.3 / 10.3**	**44**	**43.6**

Sealing lips may, in some cases, protrude beyond the edge of the seal body.
Sizes printed in **bold** are preferred. Sizes not stated on these tables are available on request (note this will include a tooling charge).

Sizes				TSS Part No.	Sizes		
d1 [mm]	d2 [mm]	b [mm] exc. TJB	b [mm] TJB		b1 min. [mm]	d4 max. [mm]	d5 min. [mm]
40	62	8	10	TJ_5_0400	8.3 / 10.3	44	43.6
40	72	7	10	TJ_6_0400	7.3 / 10.3	44	43.6
42	55	8	10	TJ_1_0420	8.3 / 10.3	46	45.6
42	62	8	10	TJ_2_0420	8.3 / 10.3	46	45.6
42	72	8	10	TJ_3_0420	8.3 / 10.3	46	45.6
45	60	8	10	TJ_1_0450	8.3 / 10.3	49	48.6
45	**62**	**8**	**10**	**TJ_2_0450**	**8.3 / 10.3**	**49**	**48.6**
45	65	8	10	TJ_3_0450	8.3 / 10.3	49	48.6
45	72	8	10	TJ_4_0450	8.3 / 10.3	49	48.6
48	62	8	10	TJ_1_0480	8.3 / 10.3	52	51.6
48	72	8	10	TJ_2_0480	8.3 / 10.3	52	51.6
50	65	8	10	TJ_1_0500	8.3 / 10.3	54	53.6
50	68	8	10	TJ_2_0500	8.3 / 10.3	54	53.6
50	**72**	**8**	**10**	**TJ_3_0500**	**8.3 / 10.3**	**54**	**53.6**
50	80	8	10	TJ_4_0500	8.3 / 10.3	54	53.6
52	68	8	10	TJ_1_0520	8.3 / 10.3	56	55.6
52	72	8	10	TJ_2_0520	8.3 / 10.3	56	55.6
55	70	8	10	TJ_1_0550	8.3 / 10.3	59	58.6
55	**72**	**8**	**10**	**TJ_2_0550**	**8.3 / 10.3**	**59**	**58.6**
55	80	8	10	TJ_3_0550	8.3 / 10.3	59	58.6
55	85	8	10	TJ_4_0550	8.3 / 10.3	59	58.6
56	70	8	10	TJ_1_0560	8.3 / 10.3	60	59.6
56	72	8	10	TJ_2_0560	8.3 / 10.3	60	59.6
56	80	8	10	TJ_3_0560	8.3 / 10.3	60	59.6
56	85	8	10	TJ_4_0560	8.3 / 10.3	60	59.6
58	72	8	10	TJ_1_0580	8.3 / 10.3	62	61.6
58	80	8	10	TJ_2_0580	8.3 / 10.3	62	61.6
60	75	8	10	TJ_1_0600	8.3 / 10.3	64	63.6
60	**80**	**8**	**10**	**TJ_2_0600**	**8.3 / 10.3**	**64**	**63.6**
60	85	8	10	TJ_3_0600	8.3 / 10.3	64	63.6
60	90	8	10	TJ_4_0600	8.3 / 10.3	64	63.6
62	85	10	10	TJ_1_0620	10.3	68	66.4
62	90	10	10	TJ_2_0620	10.3	68	66.4
63	85	10	10	TJ_1_0630	10.3	69	67.4
63	90	10	10	TJ_2_0630	10.3	69	67.4
65	**85**	**10**	**10**	**TJ_1_0650**	**10.3**	**71**	**69.4**
65	90	10	10	TJ_2_0650	10.3	71	69.4
65	100	10	10	TJ_3_0650	10.3	71	69.4
68	90	10	10	TJ_1_0680	10.3	74	72.4
68	100	10	10	TJ_2_0680	10.3	74	72.4
70	**90**	**10**	**10**	**TJ_1_0700**	**10.3**	**76**	**74.4**
70	95	10	10	TJ_2_0700	10.3	76	74.4
70	100	10	10	TJ_3_0700	10.3	76	74.4
72	95	10	10	TJ_1_0720	10.3	78	76.4
72	100	10	10	TJ_2_0720	10.3	78	76.4
75	**95**	**10**	**10**	**TJ_1_0750**	**10.3**	**81**	**79.4**
75	100	10	10	TJ_2_0750	10.3	81	79.4
78	100	10	10	TJ_1_0780	10.3	84	82.4
80	**100**	**10**	**10**	**TJ_1_0800**	**10.3**	**86**	**84.4**
80	110	10	10	TJ_2_0800	10.3	86	84.4
85	110	12	12	TJ_1_0850	12.4	91	89.4

Sealing lips may, in some cases, protrude beyond the edge of the seal body.
Sizes printed in **bold** are preferred. Sizes not stated on these tables are available on request (note this will include a tooling charge).

Sizes				TSS Part No.	Sizes		
d1 [mm]	d2 [mm]	b [mm] exc. TJB	b [mm] TJB		b1 min. [mm]	d4 max. [mm]	d5 min. [mm]
85	120	12	12	TJ_2_0850	12.4	91	89.4
90	110	12	12	TJ_1_0900	12.4	96	94.4
90	**120**	**12**	**12**	**TJ_2_0900**	**12.4**	**96**	**94.4**
95	120	12	12	TJ_1_0950	12.4	101	99.4
95	125	12	12	TJ_2_0950	12.4	101	99.4
100	120	12	12	TJ_1_1000	12.4	106	104.4
100	125	12	12	TJ_2_1000	12.4	106	104.4
100	**130**	**12**	**12**	**TJ_3_1000**	**12.4**	**106**	**104.4**
105	**130**	**12**	**12**	**TJ_1_1050**	**12.4**	**111**	**109.4**
105	140	12	12	TJ_2_1050	12.4	111	109.4
110	130	12	12	TJ_1_1100	12.4	116	114.4
110	**140**	**12**	**12**	**TJ_2_1100**	**12.4**	**116**	**114.4**
115	140	12	12	TJ_1_1150	12.4	121	119.4
115	150	12	12	TJ_2_1150	12.4	121	119.4
120	**150**	**12**	**12**	**TJ_1_1200**	**12.4**	**126**	**124.4**
120	160	12	12	TJ_2_1200	12.4	126	124.4
125	150	12	12	TJ_1_1250	12.4	131	129.4
125	160	12	12	TJ_2_1250	12.4	131	129.4
130	**160**	**12**	**12**	**TJ_1_1300**	**12.4**	**136**	**134.4**
130	170	12	12	TJ_2_1300	12.4	136	134.4
135	170	12	12	TJ_1_1350	12.4	141	139.4
140	170	15	15	TJ_1_1400	15.4	148	147.0
145	175	15	15	TJ_1_1450	15.4	153	152.0
150	**180**	**15**	**15**	**TJ_1_1500**	**15.4**	**158**	**157.0**
160	190	15	15	TJ_1_1600	15.4	168	167.0
170	200	15	15	TJ_1_1700	15.4	178	177.0

Sealing lips may, in some cases, protrude beyond the edge of the seal body.
Sizes printed in **bold** are preferred. Sizes not stated on these tables are available on request (note this will include a tooling charge).

Table LXXI Turcon® Varilip® PDR Inch Size Range

Sizes				TSS Part No.	Sizes		
d1 [inch]	d2 [inch]	b [inch]	b [inch] TJB		b1 min. [inch]	d4 max. [inch]	d5 min. [inch]
0.438	**0.938**	**0.276**	**0.393**	**TJ_E_D407**	**0.288 / 0.405**	**0.595**	**0.580**
0.438	1.063	0.276	0.393	TJ_F_D507	0.288 / 0.405	0.595	0.580
0.438	1.188	0.276	0.393	TJ_G_D607	0.288 / 0.405	0.595	0.580
0.438	1.313	0.276	0.393	TJ_H_D707	0.288 / 0.405	0.595	0.580
0.438	1.438	0.276	0.393	TJ_J_D807	0.288 / 0.405	0.595	0.580
0.500	**1.000**	**0.276**	**0.393**	**TJ_E_D408**	**0.288 / 0.405**	**0.657**	**0.642**
0.500	1.125	0.276	0.393	TJ_F_D508	0.288 / 0.405	0.657	0.642
0.500	1.250	0.276	0.393	TJ_G_D608	0.288 / 0.405	0.657	0.642
0.500	1.375	0.276	0.393	TJ_H_D708	0.288 / 0.405	0.657	0.642
0.500	1.500	0.276	0.393	TJ_J_D808	0.288 / 0.405	0.657	0.642
0.563	**1.063**	**0.276**	**0.393**	**TJ_E_D409**	**0.288 / 0.405**	**0.720**	**0.705**
0.563	1.188	0.276	0.393	TJ_F_D509	0.288 / 0.405	0.720	0.705
0.563	1.313	0.276	0.393	TJ_G_D609	0.288 / 0.405	0.720	0.705
0.563	1.438	0.276	0.393	TJ_H_D709	0.288 / 0.405	0.720	0.705
0.563	1.563	0.276	0.393	TJ_J_D809	0.288 / 0.405	0.720	0.705
0.625	**1.125**	**0.276**	**0.393**	**TJ_E_D410**	**0.288 / 0.405**	**0.782**	**0.767**
0.625	1.250	0.276	0.393	TJ_F_D510	0.288 / 0.405	0.782	0.767
0.625	1.375	0.276	0.393	TJ_G_D610	0.288 / 0.405	0.782	0.767
0.625	1.500	0.276	0.393	TJ_H_D710	0.288 / 0.405	0.782	0.767
0.625	1.625	0.276	0.393	TJ_J_D810	0.288 / 0.405	0.782	0.767
0.688	**1.188**	**0.276**	**0.393**	**TJ_E_D411**	**0.288 / 0.405**	**0.845**	**0.830**
0.688	1.313	0.276	0.393	TJ_F_D511	0.288 / 0.405	0.845	0.830
0.688	1.438	0.276	0.393	TJ_G_D611	0.288 / 0.405	0.845	0.830
0.688	1.563	0.276	0.393	TJ_H_D711	0.288 / 0.405	0.845	0.830
0.688	1.688	0.276	0.393	TJ_J_D811	0.288 / 0.405	0.845	0.830
0.750	**1.250**	**0.276**	**0.393**	**TJ_E_D412**	**0.288 / 0.405**	**0.907**	**0.892**
0.750	1.375	0.276	0.393	TJ_F_D512	0.288 / 0.405	0.907	0.892
0.750	1.500	0.276	0.393	TJ_G_D612	0.288 / 0.405	0.907	0.892
0.750	1.625	0.276	0.393	TJ_H_D712	0.288 / 0.405	0.907	0.892
0.750	1.750	0.276	0.393	TJ_J_D812	0.288 / 0.405	0.907	0.892
0.813	**1.313**	**0.276**	**0.393**	**TJ_E_D413**	**0.288 / 0.405**	**0.970**	**0.955**
0.813	1.438	0.276	0.393	TJ_F_D513	0.288 / 0.405	0.970	0.955
0.813	1.563	0.276	0.393	TJ_G_D613	0.288 / 0.405	0.970	0.955
0.813	1.688	0.276	0.393	TJ_H_D713	0.288 / 0.405	0.970	0.955
0.813	1.813	0.276	0.393	TJ_J_D813	0.288 / 0.405	0.970	0.955
0.875	**1.375**	**0.276**	**0.393**	**TJ_E_D414**	**0.288 / 0.405**	**1.032**	**1.017**
0.875	1.500	0.276	0.393	TJ_F_D514	0.288 / 0.405	1.032	1.017
0.875	1.625	0.276	0.393	TJ_G_D614	0.288 / 0.405	1.032	1.017
0.875	1.750	0.276	0.393	TJ_H_D714	0.288 / 0.405	1.032	1.017
0.875	1.875	0.276	0.393	TJ_J_D814	0.288 / 0.405	1.032	1.017
0.938	**1.438**	**0.276**	**0.393**	**TJ_E_D415**	**0.288 / 0.405**	**1.095**	**1.080**
0.938	1.563	0.276	0.393	TJ_F_D515	0.288 / 0.405	1.095	1.080
0.938	1.688	0.276	0.393	TJ_G_D615	0.288 / 0.405	1.095	1.080
0.938	1.813	0.276	0.393	TJ_H_D715	0.288 / 0.405	1.095	1.080
0.938	1.938	0.276	0.393	TJ_J_D815	0.288 / 0.405	1.095	1.080
1.000	**1.500**	**0.276**	**0.393**	**TJ_E_D416**	**0.288 / 0.405**	**1.157**	**1.142**
1.000	1.625	0.276	0.393	TJ_F_D516	0.288 / 0.405	1.157	1.142
1.000	1.750	0.276	0.393	TJ_G_D616	0.288 / 0.405	1.157	1.142

Sealing lips may, in some cases, protrude beyond the edge of the seal body.
Sizes printed in **bold** are preferred. Sizes not stated on these tables are available on request (note this will include a tooling charge).

Sizes				TSS Part No.	Sizes		
d1 [inch]	d2 [inch]	b [inch]	b [inch] TJB		b1 min. [inch]	d4 max. [inch]	d5 min. [inch]
1.000	1.875	0.276	0.393	TJ_H_D716	0.288 / 0.405	1.157	1.142
1.000	2.000	0.276	0.393	TJ_J_D816	0.288 / 0.405	1.157	1.142
1.125	**1.625**	**0.276**	**0.393**	**TJ_E_D418**	**0.288 / 0.405**	**1.282**	**1.267**
1.125	1.750	0.276	0.393	TJ_F_D518	0.288 / 0.405	1.282	1.267
1.125	1.875	0.276	0.393	TJ_G_D618	0.288 / 0.405	1.282	1.267
1.125	2.000	0.276	0.393	TJ_H_D718	0.288 / 0.405	1.282	1.267
1.125	2.125	0.276	0.393	TJ_J_D818	0.288 / 0.405	1.282	1.267
1.250	**1.750**	**0.276**	**0.393**	**TJ_E_D420**	**0.288 / 0.405**	**1.407**	**1.392**
1.250	1.875	0.276	0.393	TJ_F_D520	0.288 / 0.405	1.407	1.392
1.250	2.000	0.276	0.393	TJ_G_D620	0.288 / 0.405	1.407	1.392
1.250	2.125	0.276	0.393	TJ_H_D720	0.288 / 0.405	1.407	1.392
1.250	2.250	0.276	0.393	TJ_J_D820	0.288 / 0.405	1.407	1.392
1.375	**1.875**	**0.276**	**0.393**	**TJ_E_D422**	**0.288 / 0.405**	**1.532**	**1.517**
1.375	2.000	0.276	0.393	TJ_F_D522	0.288 / 0.405	1.532	1.517
1.375	2.125	0.276	0.393	TJ_G_D622	0.288 / 0.405	1.532	1.517
1.375	2.250	0.276	0.393	TJ_H_D722	0.288 / 0.405	1.532	1.517
1.375	2.375	0.276	0.393	TJ_J_D822	0.288 / 0.405	1.532	1.517
1.500	**2.000**	**0.276**	**0.393**	**TJ_E_D424**	**0.288 / 0.405**	**1.657**	**1.642**
1.500	2.125	0.276	0.393	TJ_F_D524	0.288 / 0.405	1.657	1.642
1.500	2.250	0.276	0.393	TJ_G_D624	0.288 / 0.405	1.657	1.642
1.500	2.375	0.276	0.393	TJ_H_D724	0.288 / 0.405	1.657	1.642
1.500	2.500	0.276	0.393	TJ_J_D824	0.288 / 0.405	1.657	1.642
1.625	**2.125**	**0.276**	**0.393**	**TJ_E_D426**	**0.288 / 0.405**	**1.782**	**1.767**
1.625	2.250	0.276	0.393	TJ_F_D526	0.288 / 0.405	1.782	1.767
1.625	2.375	0.276	0.393	TJ_G_D626	0.288 / 0.405	1.782	1.767
1.625	2.500	0.276	0.393	TJ_H_D726	0.288 / 0.405	1.782	1.767
1.625	2.625	0.276	0.393	TJ_J_D826	0.288 / 0.405	1.782	1.767
1.750	**2.250**	**0.276**	**0.393**	**TJ_E_D428**	**0.288 / 0.405**	**1.907**	**1.892**
1.750	2.375	0.276	0.393	TJ_F_D528	0.288 / 0.405	1.907	1.892
1.750	2.500	0.276	0.393	TJ_G_D628	0.288 / 0.405	1.907	1.892
1.750	2.625	0.276	0.393	TJ_H_D728	0.288 / 0.405	1.907	1.892
1.750	2.750	0.276	0.393	TJ_J_D828	0.288 / 0.405	1.907	1.892
1.875	**2.375**	**0.276**	**0.393**	**TJ_E_D430**	**0.288 / 0.405**	**2.032**	**2.017**
1.875	2.500	0.276	0.393	TJ_F_D530	0.288 / 0.405	2.032	2.017
1.875	2.625	0.276	0.393	TJ_G_D630	0.288 / 0.405	2.032	2.017
1.875	2.750	0.276	0.393	TJ_H_D730	0.288 / 0.405	2.032	2.017
1.875	2.875	0.276	0.393	TJ_J_D830	0.288 / 0.405	2.032	2.017
2.000	**2.500**	**0.276**	**0.393**	**TJ_E_D432**	**0.288 / 0.405**	**2.157**	**2.142**
2.000	2.625	0.276	0.393	TJ_F_D532	0.288 / 0.405	2.157	2.142
2.000	2.750	0.276	0.393	TJ_G_D632	0.288 / 0.405	2.157	2.142
2.000	2.875	0.276	0.393	TJ_H_D732	0.288 / 0.405	2.157	2.142
2.000	3.000	0.276	0.393	TJ_J_D832	0.288 / 0.405	2.157	2.142
2.125	**2.625**	**0.276**	**0.393**	**TJ_E_D434**	**0.288 / 0.405**	**2.282**	**2.267**
2.125	2.750	0.276	0.393	TJ_F_D534	0.288 / 0.405	2.282	2.267
2.125	2.875	0.276	0.393	TJ_G_D634	0.288 / 0.405	2.282	2.267
2.125	3.000	0.276	0.393	TJ_H_D734	0.288 / 0.405	2.282	2.267
2.125	3.125	0.276	0.393	TJ_J_D834	0.288 / 0.405	2.282	2.267
2.250	**2.750**	**0.276**	**0.393**	**TJ_E_D436**	**0.288 / 0.405**	**2.407**	**2.392**
2.250	2.875	0.276	0.393	TJ_F_D536	0.288 / 0.405	2.407	2.392
2.250	3.000	0.276	0.393	TJ_G_D636	0.288 / 0.405	2.407	2.392
2.250	3.125	0.276	0.393	TJ_H_D736	0.288 / 0.405	2.407	2.392

Sealing lips may, in some cases, protrude beyond the edge of the seal body.
Sizes printed in **bold** are preferred. Sizes not stated on these tables are available on request (note this will include a tooling charge).

Sizes				TSS Part No.	Sizes		
d1 [inch]	d2 [inch]	b [inch]	b [inch] TJB		b1 min. [inch]	d4 max. [inch]	d5 min. [inch]
2.250	3.250	0.276	0.393	TJ_J_D836	0.288 / 0.405	2.407	2.392
2.375	**2.875**	**0.276**	**0.393**	**TJ_E_D438**	**0.288 / 0.405**	**2.532**	**2.517**
2.375	3.000	0.276	0.393	TJ_F_D538	0.288 / 0.405	2.532	2.517
2.375	3.125	0.276	0.393	TJ_G_D638	0.288 / 0.405	2.532	2.517
2.375	3.250	0.276	0.393	TJ_H_D738	0.288 / 0.405	2.532	2.517
2.375	3.375	0.276	0.393	TJ_J_D838	0.288 / 0.405	2.532	2.517
2.500	**3.000**	**0.315**	**0.393**	**TJ_E_D440**	**0.327 / 0.405**	**2.657**	**2.642**
2.500	3.125	0.315	0.393	TJ_F_D540	0.327 / 0.405	2.657	2.642
2.500	3.250	0.315	0.393	TJ_G_D640	0.327 / 0.405	2.657	2.642
2.500	3.375	0.315	0.393	TJ_H_D740	0.327 / 0.405	2.657	2.642
2.500	3.500	0.315	0.393	TJ_J_D840	0.327 / 0.405	2.657	2.642
2.625	**3.125**	**0.315**	**0.393**	**TJ_E_D442**	**0.327 / 0.405**	**2.861**	**2.798**
2.625	3.250	0.315	0.393	TJ_F_D542	0.327 / 0.405	2.861	2.798
2.625	3.375	0.315	0.393	TJ_G_D642	0.327 / 0.405	2.861	2.798
2.625	3.500	0.315	0.393	TJ_H_D742	0.327 / 0.405	2.861	2.798
2.625	3.625	0.315	0.393	TJ_J_D842	0.327 / 0.405	2.861	2.798
2.750	**3.250**	**0.315**	**0.393**	**TJ_E_D444**	**0.327 / 0.405**	**2.986**	**2.923**
2.750	3.375	0.315	0.393	TJ_F_D544	0.327 / 0.405	2.986	2.923
2.750	3.500	0.315	0.393	TJ_G_D644	0.327 / 0.405	2.986	2.923
2.750	3.625	0.315	0.393	TJ_H_D744	0.327 / 0.405	2.986	2.923
2.750	3.750	0.315	0.393	TJ_J_D844	0.327 / 0.405	2.986	2.923
2.875	**3.375**	**0.315**	**0.393**	**TJ_E_D446**	**0.327 / 0.405**	**3.111**	**3.048**
2.875	3.500	0.315	0.393	TJ_F_D546	0.327 / 0.405	3.111	3.048
2.875	3.625	0.315	0.393	TJ_G_D646	0.327 / 0.405	3.111	3.048
2.875	3.750	0.315	0.393	TJ_H_D746	0.327 / 0.405	3.111	3.048
2.875	3.875	0.315	0.393	TJ_J_D846	0.327 / 0.405	3.111	3.048
3.000	**3.500**	**0.315**	**0.393**	**TJ_E_D448**	**0.327 / 0.405**	**3.236**	**3.173**
3.000	3.625	0.315	0.393	TJ_F_D548	0.327 / 0.405	3.236	3.173
3.000	3.750	0.315	0.393	TJ_G_D648	0.327 / 0.405	3.236	3.173
3.000	3.875	0.315	0.393	TJ_H_D748	0.327 / 0.405	3.236	3.173
3.000	4.000	0.315	0.393	TJ_J_D848	0.327 / 0.405	3.236	3.173
3.125	**3.625**	**0.315**	**0.393**	**TJ_E_D450**	**0.327 / 0.405**	**3.361**	**3.298**
3.125	3.750	0.315	0.393	TJ_F_D550	0.327 / 0.405	3.361	3.298
3.125	3.875	0.315	0.393	TJ_G_D650	0.327 / 0.405	3.361	3.298
3.125	4.000	0.315	0.393	TJ_H_D750	0.327 / 0.405	3.361	3.298
3.125	4.125	0.315	0.393	TJ_J_D850	0.327 / 0.405	3.361	3.298
3.250	**3.875**	**0.315**	**0.393**	**TJ_F_D552**	**0.327 / 0.405**	**3.486**	**3.423**
3.250	4.000	0.315	0.393	TJ_G_D652	0.327 / 0.405	3.486	3.423
3.250	4.125	0.315	0.393	TJ_H_D752	0.327 / 0.405	3.486	3.423
3.250	4.250	0.315	0.393	TJ_J_D852	0.327 / 0.405	3.486	3.423
3.375	**4.000**	**0.472**	**0.472**	**TJ_F_D554**	**0.484**	**3.611**	**3.548**
3.375	4.125	0.472	0.472	TJ_G_D654	0.484	3.611	3.548
3.375	4.250	0.472	0.472	TJ_H_D754	0.484	3.611	3.548
3.375	4.375	0.472	0.472	TJ_J_D854	0.484	3.611	3.548
3.500	**4.125**	**0.472**	**0.472**	**TJ_F_D556**	**0.484**	**3.736**	**3.673**
3.500	4.250	0.472	0.472	TJ_G_D656	0.484	3.736	3.673
3.500	4.375	0.472	0.472	TJ_H_D756	0.484	3.736	3.673
3.500	4.500	0.472	0.472	TJ_J_D856	0.484	3.736	3.673
3.625	**4.250**	**0.472**	**0.472**	**TJ_F_D558**	**0.484**	**3.861**	**3.798**
3.625	4.375	0.472	0.472	TJ_G_D658	0.484	3.861	3.798
3.625	4.500	0.472	0.472	TJ_H_D758	0.484	3.861	3.798

Sealing lips may, in some cases, protrude beyond the edge of the seal body.
Sizes printed in **bold** are preferred. Sizes not stated on these tables are available on request (note this will include a tooling charge).

Sizes				TSS Part No.	Sizes		
d1 [inch]	d2 [inch]	b [inch]	b [inch] TJB		b1 min. [inch]	d4 max. [inch]	d5 min. [inch]
3.625	4.625	0.472	0.472	TJ_J_D858	0.484	3.861	3.798
3.750	**4.375**	**0.472**	**0.472**	**TJ_F_D560**	**0.484**	**3.986**	**3.923**
3.750	4.500	0.472	0.472	TJ_G_D660	0.484	3.986	3.923
3.750	4.625	0.472	0.472	TJ_H_D760	0.484	3.986	3.923
3.750	4.750	0.472	0.472	TJ_J_D860	0.484	3.986	3.923
3.875	**4.500**	**0.472**	**0.472**	**TJ_F_D562**	**0.484**	**4.111**	**4.048**
3.875	4.625	0.472	0.472	TJ_G_D662	0.484	4.111	4.048
3.875	4.750	0.472	0.472	TJ_H_D762	0.484	4.111	4.048
3.875	4.875	0.472	0.472	TJ_J_D862	0.484	4.111	4.048
4.000	**4.625**	**0.472**	**0.472**	**TJ_F_D564**	**0.484**	**4.236**	**4.173**
4.000	4.750	0.472	0.472	TJ_G_D664	0.484	4.236	4.173
4.000	4.875	0.472	0.472	TJ_H_D764	0.484	4.236	4.173
4.000	5.000	0.472	0.472	TJ_J_D864	0.484	4.236	4.173
4.125	**4.750**	**0.472**	**0.472**	**TJ_F_D566**	**0.484**	**4.361**	**4.298**
4.125	4.875	0.472	0.472	TJ_G_D666	0.484	4.361	4.298
4.125	5.000	0.472	0.472	TJ_H_D766	0.484	4.361	4.298
4.125	5.125	0.472	0.472	TJ_J_D866	0.484	4.361	4.298

Sealing lips may, in some cases, protrude beyond the edge of the seal body.
Sizes printed in **bold** are preferred. Sizes not stated on these tables are available on request (note this will include a tooling charge).

Ordering Information

An ordering example is shown below.

Ordering example

Standard, Type A/Type 1

Shaft diameter	d1	= 30 mm (1.181 in)
Outside diameter	d2	= 47 mm (1.85 in)
Width	b	= 7 mm (0.276 in)

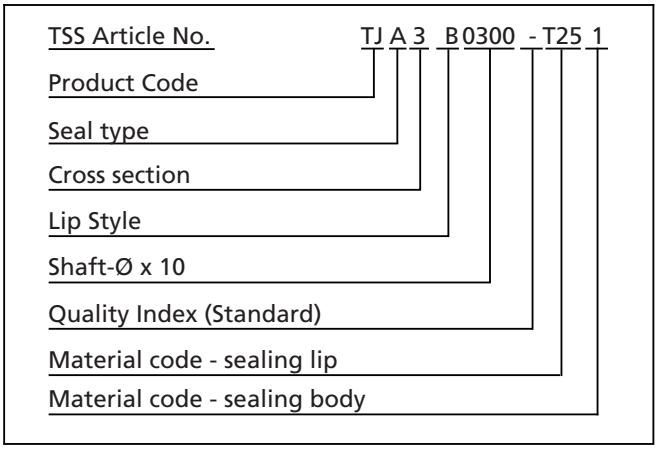

Order as:	TJA380300-T251V
Type:	A, B, C, D or G 1, 3, 4, 5 or 6
Cross Section:	1, 2, 3, 4, 5, 6 or 7 Refer to Table of Sizes
Lip Style: (Shaft rotation viewed from airside)	A, B, or C A anti-clockwise shaft B bi-directional shaft C clockwise shaft
Shaft x 10:	Refer to Table of Sizes
Quality Index:	- for standard parts A for aerospace parts
Lip Material:	Refer to Materials section
Case Materal:	1*

* Other materials available on request

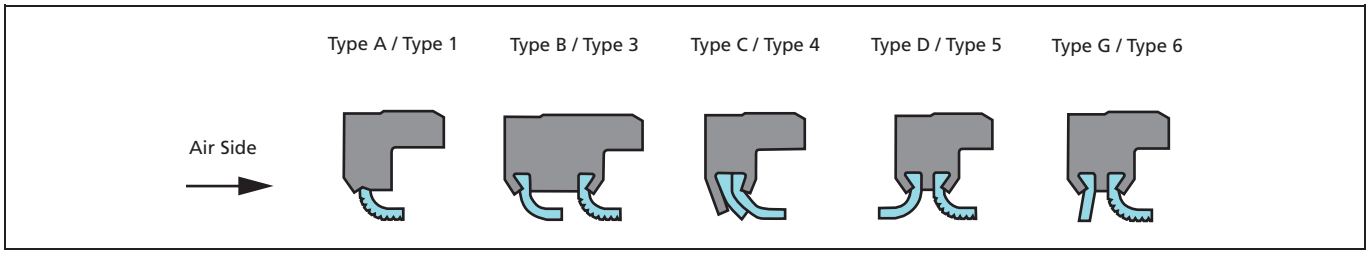

Figure 110 Product Range