TRELLEBORG
SEALING SOLUTIONS

Zurcon® Roto Glyd Ring® S

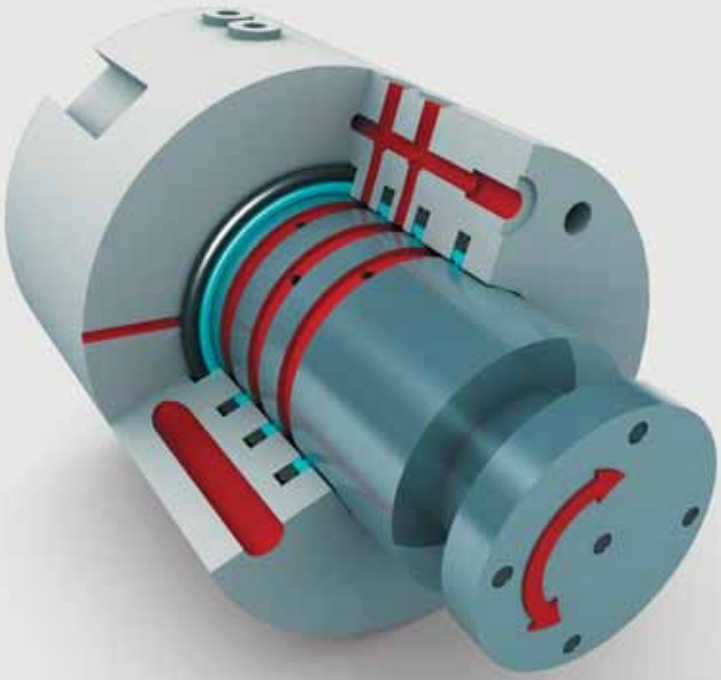







Your Partner for Sealing Technology



Your Partner for Sealing Technology

Trelleborg Sealing Solutions is a major international sealing force, uniquely placed to offer dedicated design and development from our market-leading product and material portfolio: a one-stop-shop providing the best in elastomer, thermoplastic, PTFE and composite technologies for applications in aerospace, industrial and automotive industries.

With 50 years of experience, Trelleborg Sealing Solutions engineers support customers with design, prototyping, production, test and installation using state-of-the-art design tools. An international network of over 70 facilities worldwide includes 30 manufacturing sites, strategically positioned research and development centers, including materials and development laboratories and locations specializing in design and applications.

Developing and formulating materials in-house, we utilize the resource of our material database, including over 2,000 proprietary compounds and a range of unique products.

Trelleborg Sealing Solutions fulfills challenging service requirements, supplying standard parts in volume or a single custom-manufactured component, through our integrated logistical support, which effectively delivers over 40,000 sealing products to customers worldwide.

Facilities are certified to ISO 9001:2000 and ISO/TS 16949:2002. Trelleborg Sealing Solutions is backed by the experiences and resources of one of the world's foremost experts in polymer technology: the Trelleborg Group.

ISO 9001:2000

ISO/TS 16949:2002

The information in this brochure is intended to be for general reference purposes only and is not intended to be a specific recommendation for any individual application. The application limits for pressure, temperature, speed and media given are maximum values determined in laboratory conditions. In application, due to the interaction of operating parameters, maximum values may not be achieved. It is vital therefore, that customers satisfy themselves as to the suitability of product and material for each of their individual applications. Any reliance on information is therefore at the user's own risk. In no event will Trelleborg Sealing Solutions be liable for any loss, damage, claim or expense directly or indirectly arising or resulting from the use of any information provided in this brochure. While every effort is made to ensure the accuracy of information contained herewith, Trelleborg Sealing Solutions cannot warrant the accuracy or completeness of information.

To obtain the best recommendation for a specific application, please contact your local Trelleborg Sealing Solutions marketing company.

This edition supersedes all previous brochures.
This brochure or any part of it may not be reproduced without permission.

® All trademarks are the property of Trelleborg Group.

The turquoise color is a registered trademark of Trelleborg Group.

© 2008, Trelleborg Group. All rights reserved.

TRELLEBORG
SEALING SOLUTIONS

Contents

Zurcon® Roto Glyd Ring® S 2
Installation of Zurcon® Roto Glyd Ring® S 6
Installation recommendation - shaft sealing 8
Installation recommendation - bore sealing 12

■ Zurcon® Roto Glyd Ring® S

Description

The Zurcon® Roto Glyd Ring® S is used to seal shafts, axles, bores, rotary transmission leadthroughs, journals, swivels etc. with rotary or oscillating movement.

The seal is double-acting and can be exposed to pressure from one, or from both sides.

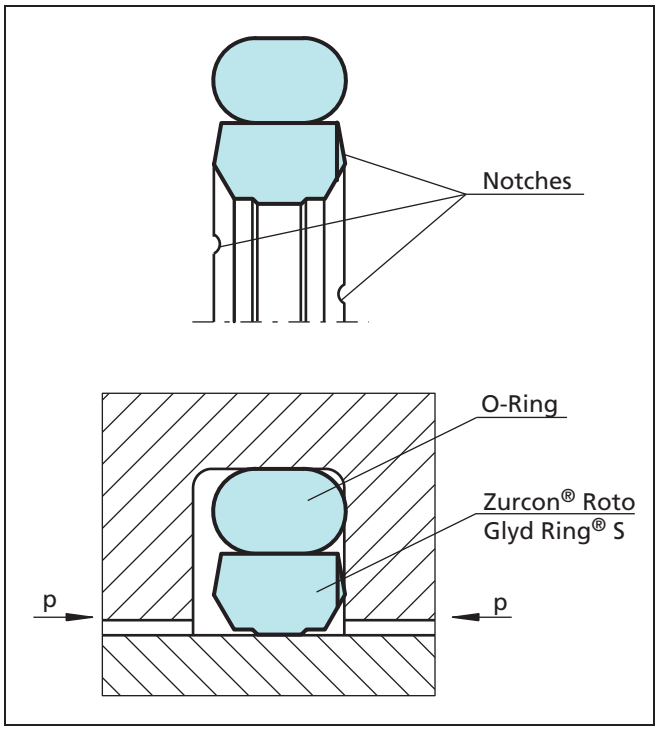

Figure 1 Zurcon® Roto Glyd Ring® S

It consists of a seal ring of Zurcon® material and is activated by an O-Ring as an elastic energising element.

The contact surface profile of the seal ring is specially designed for use under high pressures and at low sliding speeds.

Pat. pending: DE 101 45914 A1
WO 03/027545 A1

Application examples

- For sealing shafts, axels and rotary transmission leadthroughs with slow rotary or oscillating movement
- Can also be used to seal rotary joints at increased rotating speeds even when exposed to pressure, e.g. rotary indexing tables
- Rotary connections with swivel movement, even when exposed to high pressure, e.g. damping units

Advantages

- Available for shaft and bore sealing applications
- Low friction
- Stick-slip-free starting, no sticking
- High abrasion resistance and dimensional stability
- Simple groove design, small groove dimensions
- Available in material Z51 and Z52 for all shaft sizes up to 2200 mm diameter and for all bore sizes up to 2300 mm
- Available in material Z80 for all shaft sizes up to 2600 mm diameter and for all bore sizes up to 2700 mm

Technical data

Operating pressure: Up to 40 MPa

Speed: Up to pv 6.5 MPa x m/s

Acceleration: Up to 0.9 m/s^2, in other cases contact our Technical Office

Temperature: - 30°C to + 100°C

Material	Pressure **p** [MPa]	**p x v** [MPa x m/s]	Temperature **t°** [°C]
Zurcon® Z51*	40	6.5	-30/+100
Zurcon® Z52	30	6.5	-30/+100
Zurcon® Z80	30	6.5	-30/+80

* Zurcon® Z51 only for p >30MPa

Media:
- Mineral oil base
- Synthetic and natural ester HEES, HETG up to +60°C
- Flame-retardant hydraulic fluids HFA, HFC up to +60°C
  Z80 is recommended for sealing e.g. coolants or air

Note: For continuous operation at temperatures over +60°C, pressure and speed must be limited.

Important Note:
The above data are maximum values and cannot be used at the same time. e.g. the maximum operating speed depends on material type, pressure, temperature and gap value. Temperature range also dependent on medium.

Method of operation

Reduced contact surfaces under all operating conditions significantly improve friction and wear characteristics. When exposed to low pressure, only the central section of the seal comes into contact with the mating surface.

As the system pressure increases, the sealing ring is tilted slightly generating the hydrostatic pressure balance in the sealing gap. Tilting the ring under pressure optimises the lubrication between the seal and the mating surface.

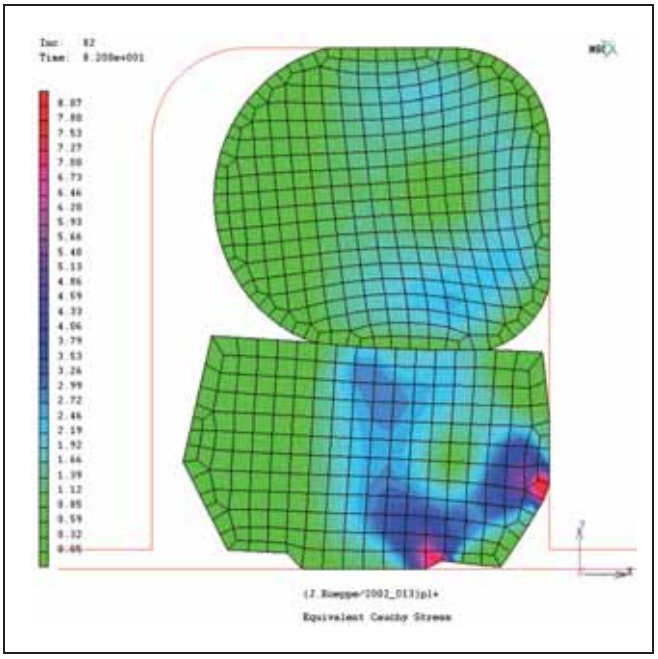

Figure 2 Zurcon® Roto Glyd Ring® S - Finite Element Analysis (FEA)

The fact that the profile is supported by a second edge restricts contact with the shaft, thereby significantly reducing friction and wear. The material used for the energising ring can be adapted to suit operating conditions. The angle on both sides of the polyurethane ring prevents extrusion into the extrusion gap.

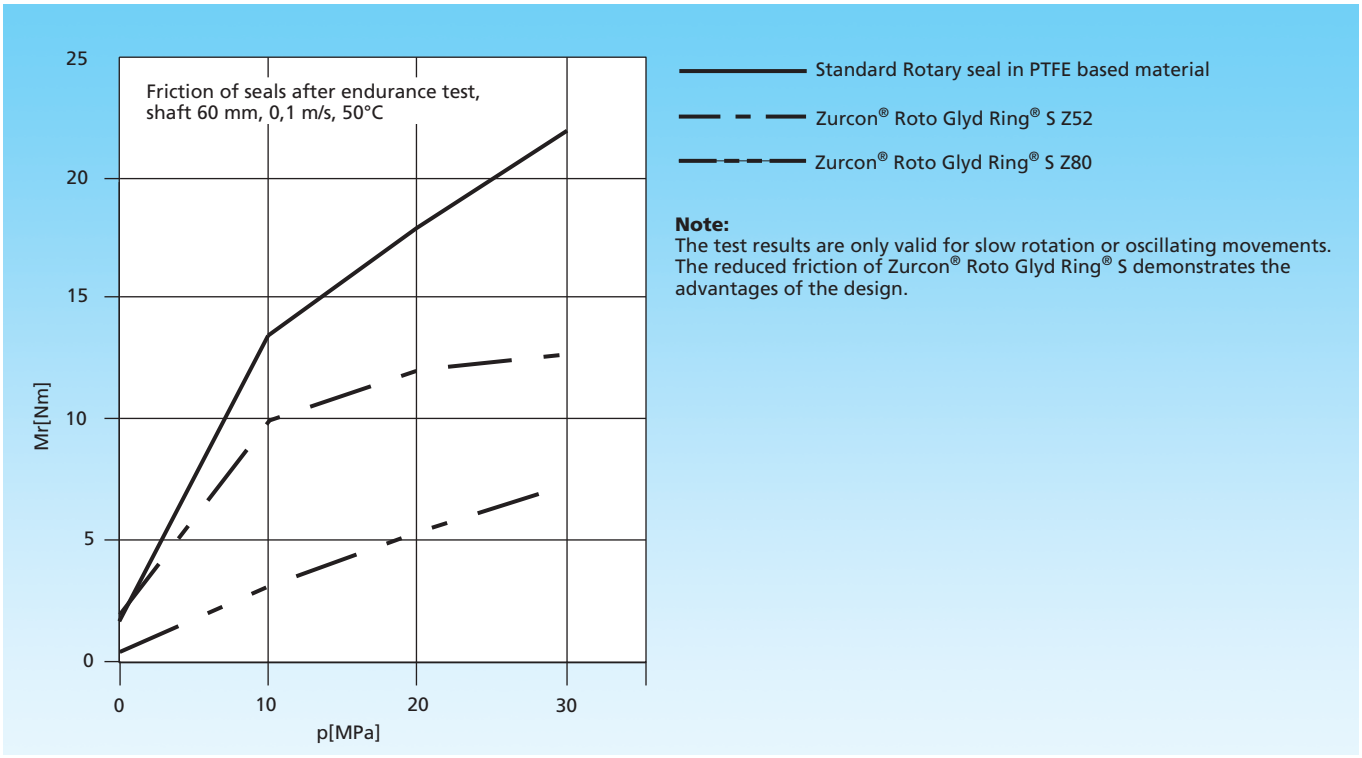

Figure 3 Friction of seals after endurance test

Table I Zurcon® Materials for Roto Glyd Ring® S

Material, Applications, Properties	Code	O-Ring Material	Code	O-Ring Operating Temp.* °C	Mating Surface Material	MPa max.
Zurcon® Z51** For lubricating hydraulic fluids, **high abrasion resistance, high extrusion resistance,** limited chemical resistance. Cast polyurethane Colour: Yellow to light-brown	Z51	NBR - 70 Shore A	N	-30 to +100	Steel Steel, chromeplated Cast iron Ceramic coating Stainless steel	40
		NBR - Low temp. 70 Shore A	T	-45 to +80		
Zurcon® Z52 For lubricating hydraulic fluids, **good abrasion resistance, good extrusion resistance,** limited chemical resistance. Cast polyurethane Colour: Turquoise	Z52	NBR - 70 Shore A	N	-30 to +100	Steel Steel, chromeplated Cast iron Ceramic coating Stainless steel	30
		NBR - Low temp. 70 Shore A	T	-45 to +80		
Zurcon® Z80 For lubricating and non-lubricating hydraulic fluids***, high abrasion resistance, very good chemical resistance, limited temperature resistance. Ultra high molecular weight polyethylen Colour: White to off-white	Z80	NBR - 70 Shore A	N	-30 to +80	Steel Steel, chromeplated Stainless steel Aluminium Bronze Ceramic coating	30
		NBR - Low temp. 70 Shore A	T	-45 to +80		
		FKM - 70 Shore A	V	-10 to +80		

* The O-Ring Operation Temperature is only valid in mineral hydraulic oil. ** max. Ø 2200 mm *** e.g. coolant fluids
Highlighted material is standard.

Lead-in chamfers

In order to avoid damage during installation, lead-in chamfers and rounded edges must be provided on the housing and on the shaft (Figures 4 and 5). If this is not possible for design reasons, a separate installation tool is recommended.

The minimum length of the lead-in chamfer depends on the profile size of the seal and can be seen from the following tables. If concentricity between the parts is not ensured during installation the lead-in chamfers must be increased correspondingly.

For the surface quality of the lead-in chamfer, the same recommendations apply as given for the sealing surfaces in Table I.

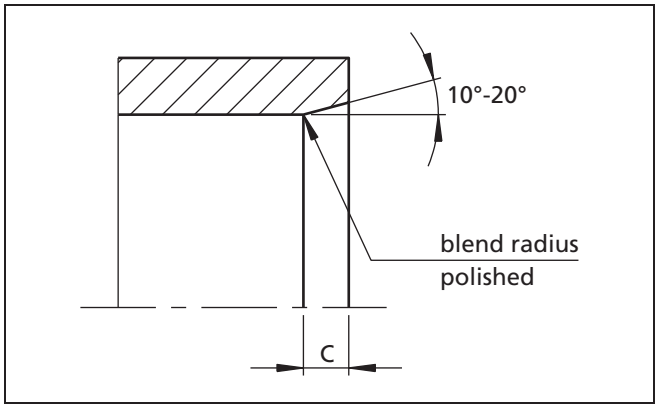

Figure 4 Lead-in chamfer on bore

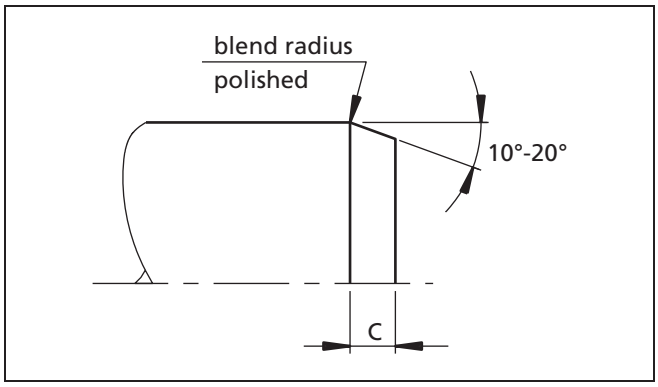

Figure 5 Lead-in chamfer on shaft

Table II Lead-in chamfers for Zurcon® Roto Glyd Ring® S

Series no.		Lead-in chamfers length C min.
Shaft	Bore	
TG50	TG60	2.0
TG51	TG61	2.5
TG52	TG62	3.5
TG53	TG63	5.0
TG54	TG64	6.5
TG55	TG65	7.5

Table III Surface roughness

Surface roughness µm		
Parameter	Mating surface	Groove surface
	Zurcon® materials	
R_{max}	0.63 - 2.50	< 16.0
$R_{z\ DIN}$	0.40 - 1.60	< 10.0
R_a	0.05 - 0.20	< 1.6

The material contact area R_{mr} should be approx. 50 to 70%, determined at a cut depth c = 0.25 x R_z, relative to a reference line of C_{ref}. 5%.

For ceramic coated surfaces, like plasma sprayed, additional focus on surface texture is necessary. Peaks and sharp edges from pores have to be polished away (e.g. with diamond paste on soft "pad") to avoid premature seal wear.

Closed grooves

Zurcon® Roto Glyd Ring® S for shaft and bore sealing can be installed in closed grooves at diameters from Ø 12. Seal cross sections used outside of their recommended diameter range require split grooves according to table IV below.

Table IV Groove type - closed or split

Series no.		Split grooves required below		
Shaft	Bore	Zurcon® Z51	Zurcon® Z52	Zurcon® Z80
TG50	-	ø 18	ø 12	ø 18
TG51	-	ø 25	ø 19	ø 25
TG52	-	ø 33	ø 33	ø 33
TG53	-	ø 60	ø 60	ø 60
-	TG60	ø 25	ø 12	ø 25
-	TG61	ø 38	ø 25	ø 38
-	TG62	ø 50	ø 32	ø 50
-	TG63	ø 75	ø 50	ø 75

■ Installation of Zurcon® Roto Glyd Ring® S

Installation instructions

The following points should be observed before installation of the seals:

- Check whether housing or shaft has a lead-in chamfer; if not, use an installation sleeve
- Deburr and chamfer or round sharp edges, cover the tips of any screw threads
- Remove machining residues such as chips, dirt and other foreign particles and carefully clean all parts
- The seals can be installed more easily if they are greased or oiled. Attention must be paid to the compatibility of the seal materials with these lubricants. Use only grease without solid additives (e.g. molybdenum disulphide or zinc sulphide)
- Do not use installation tools with sharp edges

Installation of Zurcon®Roto Glyd Ring® S in split grooves

"shaft and bore sealing"

Installation in split grooves is simple. During final assembly - insertion of the shaft - the Zurcon®Roto Glyd Ring® S must be sized. The shaft itself can be used for this purpose, provided it has a long lead-in chamfer. Alternatively a corresponding mandrel can be used.

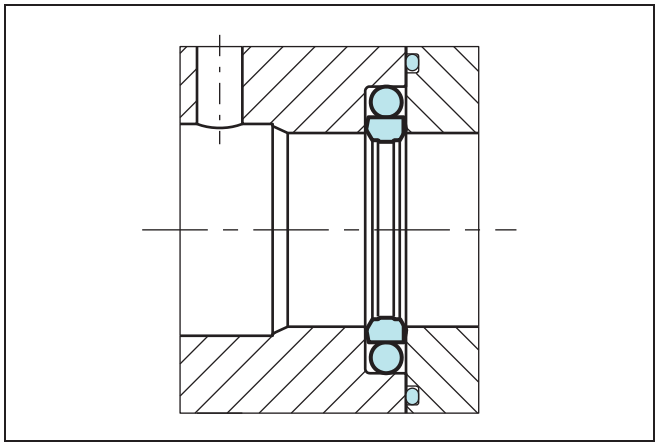

Figure 6 Installation in a split groove

The following installation sequence is recommended:

- Pull the O-Ring onto the Roto Glyd Ring® S
- Press the seal element into the groove. The O-Ring must not be allowed to twist

Installation of Zurcon® Roto Glyd Ring® S in closed grooves

"shaft sealing"

The installation of our seal elements is unproblematical.

- Place the O-Ring into the groove (avoid twisting the ring!)
- Compress the Zurcon® Roto Glyd Ring® S into a kidney shape. The seal must have no sharp bends

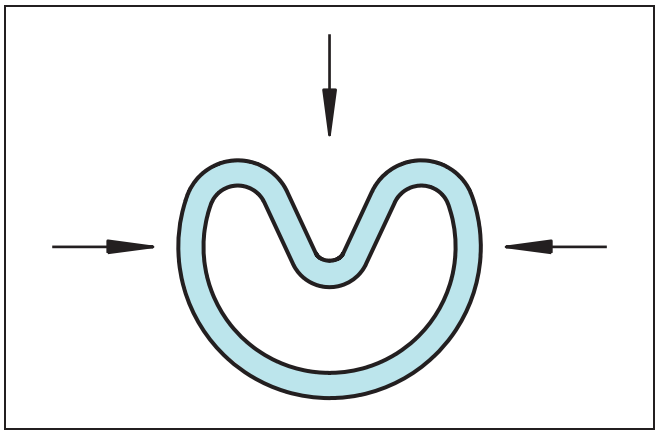

Figure 7 Kidney-shaped deformation of the seal ring

- Place the seal ring in compressed form into the groove and push against the O-Ring in the direction of the arrow (Figure 8)

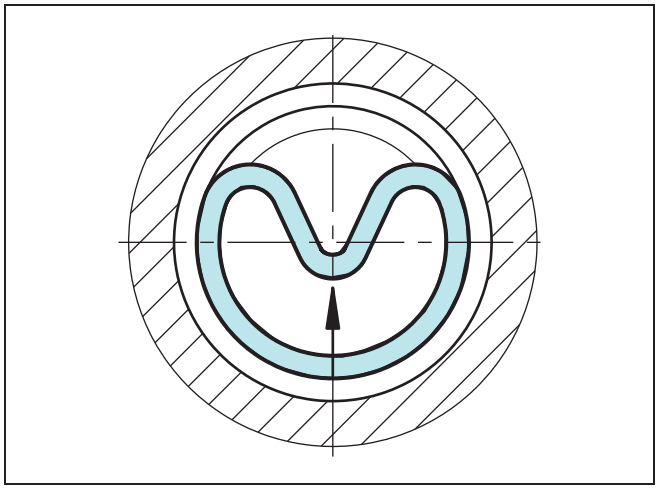

Figure 8 Inserting the seal ring into the closed groove

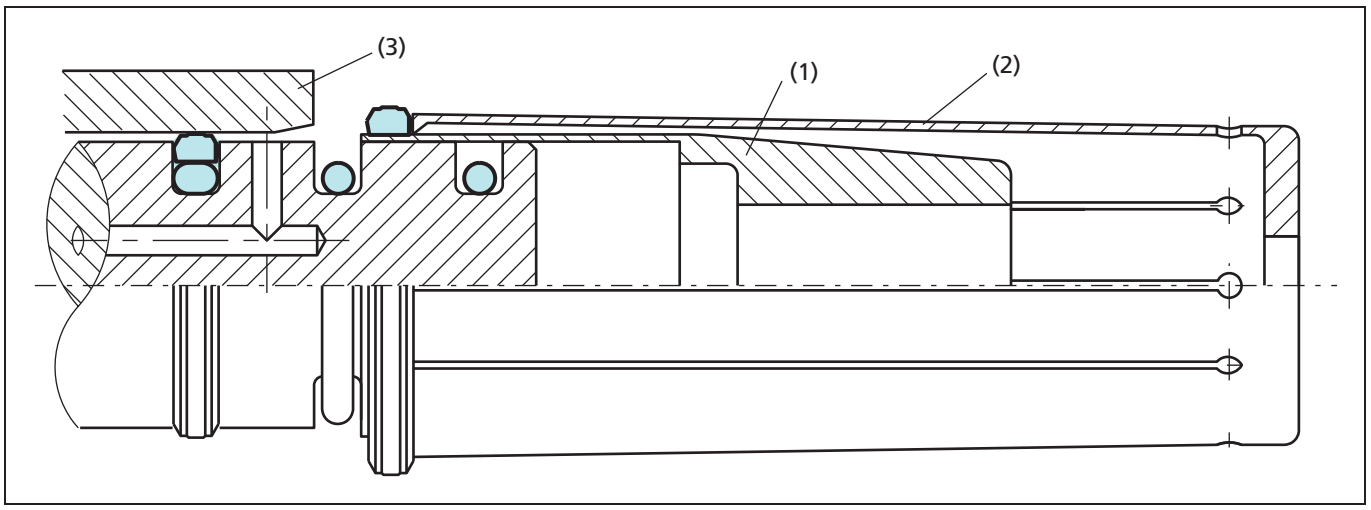

Figure 9 Expanding the Zurcon® Roto Glyd Ring® S over the installation sleeve using an expanding sleeve

Installation with installation tools (bore sealing)

Use of a three-piece installation tool is recommended for series production installation of the Zurcon® Roto Glyd Ring® S.

The tool consists of:

- Installation sleeve (1)
- Expanding sleeve (2)
- Sizing sleeve (3).

All parts should be made of a polymer material (e.g. polyamide) with a good surface finish to avoid damage to the seals.

The O-Ring should be pulled over the piston into the groove (take care not to burst the O-Ring).

The Roto Glyd Ring® S element should be expanded over the Installation sleeve using the Expanding sleeve with a fast but smooth movement.

If the cylinder bore has a sufficient lead-in chamfer, see Fig. 4, it is in general possible to install Zurcon® Roto Glyd Ring® S in material Z51, Z52 and Z80 without using the Sizing sleeve shown in Fig. 9.

In view of the large number of sizes and the application-specific installation conditions, this installation tool cannot be supplied as standard by Trelleborg Sealing Solutions.

Drawings for installation tools are available on request.

Installation without installation tools (bore sealing)

If installation has to be performed without installation tools, however, the following points should be observed:

- The Roto Glyd Ring® S can be installed more easily by heating in oil or using a hot air fan to approx. 80°C
- Use no sharp edged tools to expand the seal rings
- Installation should be performed as quickly as possible so that an optimum snap-back of the seal element is assured

■ Installation recommendation - shaft sealing

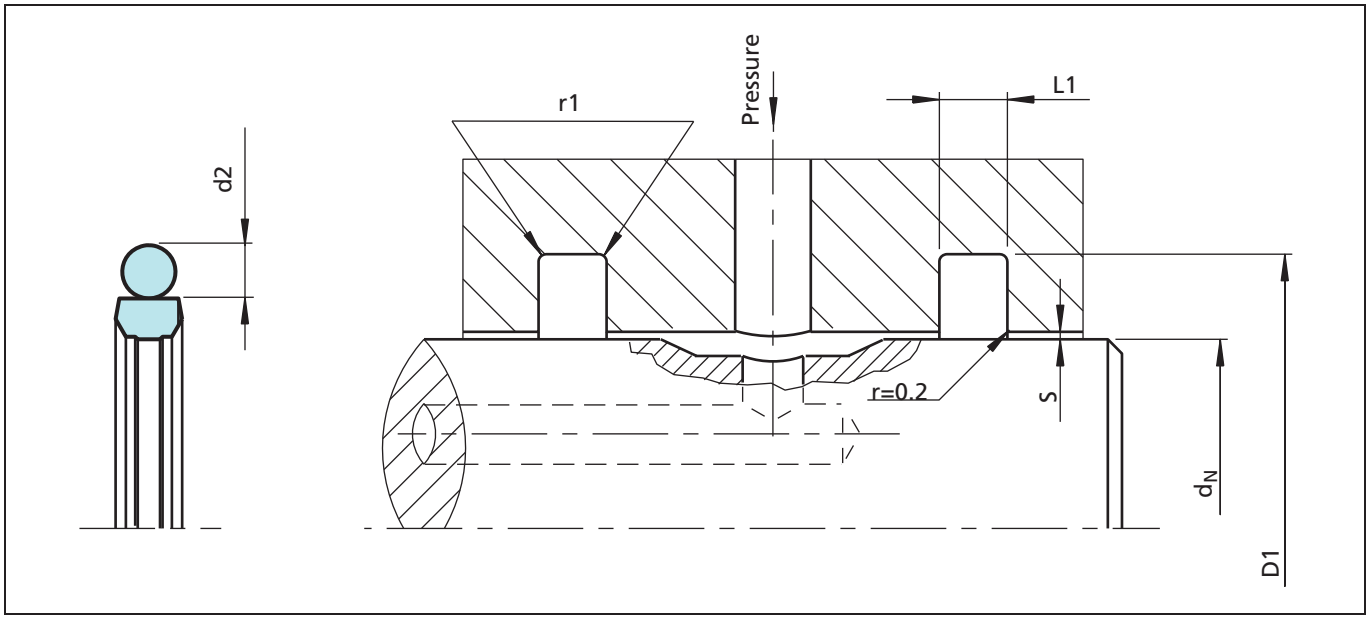

Figure 10 Installation drawing

Table V Installation dimensions

Series No.	Shaft diameter d_N f8/h9		Groove diameter	Groove width	Radial clearance S max*		Radius	O-Ring cross sec.
	Standard range	Available range	D_1 H9	L_1 +0.2	10 MPa	30 MPa	r_1	d_2
TG50	12 - 18.9	10 - 18.9	d_N+ 4.9	2.20	0.20	0.10	0.40	1.78
TG51	19 - 37.9	12 - 59.9	d_N+ 7.5	3.20	0.25	0.15	0.60	2.62
TG52	38 - 132.9	19 - 199,9	d_N+ 11.0	4.20	0.30	0.20	1.00	3.53
TG53	133 - 255.9	38 - 329.9	d_N+ 15.5	6.30	0.35	0.25	1.30	5.33
TG54	256 - 649.9	120 - 655.0	d_N+ 21.0	8.10	0.40	0.25	1.80	7.00
TG55	650 - 999.9	650 - 999.9	d_N+ 28.0	9.50	0.50	0.30	2.50	8.40

* For max. temperature = 60° C at the seal.

Ordering example

Zurcon®Roto Glyd Ring® S, complete with O-Ring, shaft sealing, series TG52 (from Table V).

Shaft diameter: d_N = 80.0 mm
TSS Part No.: TG5200800 (from Table VI)

Select the material from Table I. The corresponding code numbers are appended to the TSS Part No. Together they form the TSS Article No.
For all intermediate sizes not shown in Table VI, the TSS Article No. can be determined from the example below.
** For diameters ≥ 1000.0 mm multiply only by factor 1.
Example: TG55 for diamter 1200.0 mm.
TSS Article No.: TG55**X1200** - Z52N.

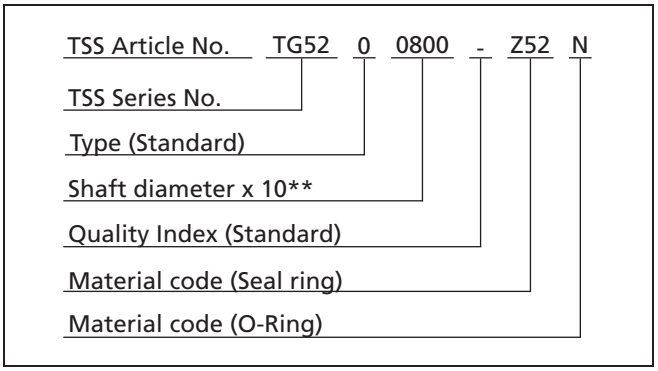

Table VI Preferred dimensions / TSS Part No.

Shaft diameter	Groove diameter	Groove width	TSS Part No.	O-Ring size
d_N f8/h9	D_1 H9	L_1 +0.2		
10.0	**14.9**	**2.2**	**TG5000100**	**11.80 x 1.80**
12.0	**16.9**	**2.2**	**TG5000120**	**14.00 x 1.78**
14.0	**18.9**	**2.2**	**TG5000140**	**15.60 x 1.78**
15.0	19.9	2.2	TG5000150	17.17 x 1.78
16.0	**20.9**	**2.2**	**TG5000160**	**18.77 x 1.78**
16.0	**23.5**	**3.2**	**TG5100160**	**18.72 x 2.62**
18.0	**22.9**	**2.2**	**TG5000180**	**20.35 x 1.78**
18.0	**25.5**	**3.2**	**TG5100180**	**21.89 x 2.62**
20.0	**27.5**	**3.2**	**TG5100200**	**23.47 x 2.62**
22.0	**29.5**	**3.2**	**TG5100220**	**25.07 x 2.62**
25.0	**32.5**	**3.2**	**TG5100250**	**28.24 x 2.62**
28.0	**35.5**	**3.2**	**TG5100280**	**31.42 x 2.62**
30.0	37.5	3.2	TG5100300	32.99 x 2.62
32.0	**39.5**	**3.2**	**TG5100320**	**34.59 x 2.62**
32.0	**43.0**	**4.2**	**TG5200320**	**36.09 x 3.53**
35.0	42.5	3.2	TG5100350	37.77 x 2.62
36.0	**43.5**	**3.2**	**TG5100360**	**37.77 x 2.62**
36.0	**47.0**	**4.2**	**TG5200360**	**40.87 x 3.53**
38.0	**49.0**	**4.2**	**TG5200380**	**44.04 x 3.53**
40.0	**51.0**	**4.2**	**TG5200400**	**47.22 x 3.53**
42.0	53.0	4.2	TG5200420	47.22 x 3.53

The shaft diameters printed in **bold** type conform to the recommendations of ISO 3320.
Other dimensions and all intermediate sizes up to 2.200 mm diameter for Z51 and Z52 (2.600 mm for Z80) including imperial (inch) sizes can be supplied.



Zurcon® Roto Glyd Ring® S

Shaft diameter	Groove diameter	Groove width	TSS Part No.	O-Ring size
d_N f8/h9	D_1 H9	L_1 +0.2		
45.0	**56.0**	**4.2**	**TG5200450**	**50.39 x 3.53**
48.0	59.0	4.2	TG5200480	53.57 x 3.53
48.0	63.5	6.3	TG5300480	56.52 x 5.33
50.0	**61.0**	**4.2**	**TG5200500**	**56.74 x 3.53**
50.0	**65.5**	**6.3**	**TG5300500**	**56.52 x 5.33**
52.0	63.0	4.2	TG5200520	56.74 x 3.53
55.0	66.0	4.2	TG5200550	59.92 x 3.53
55.0	70.5	6.3	TG5300550	62.87 x 5.33
56.0	**67.0**	**4.2**	**TG5200560**	**59.92 x 3.53**
60.0	71.0	4.2	TG5200600	66.27 x 3.53
60.0	75.5	6.3	TG5300600	66.04 x 5.33
63.0	**74.0**	**4.2**	**TG5200630**	**69.44 x 3.53**
63.0	**78.5**	**6.3**	**TG5300630**	**69.22 x 5.33**
65.0	76.0	4.2	TG5200650	69.44 x 3.53
65.0	80.5	6.3	TG5300650	72.39 x 5.33
70.0	**81.0**	**4.2**	**TG5200700**	**75.79 x 3.53**
70.0	**85.5**	**6.3**	**TG5300700**	**75.57 x 3.53**
75.0	86.0	4.2	TG5200750	82.15 x 3.53
75.0	90.5	6.3	TG5300750	81.92 x 5.33
80.0	**91.0**	**4.2**	**TG5200800**	**85.32 x 3.53**
80.0	**95.5**	**6.3**	**TG5300800**	**88.27 x 5.33**
85.0	96.0	4.2	TG5200850	91.67 x 3.53
85.0	100.5	6.3	TG5300850	91.44 x 5.33
90.0	**101.0**	**4.2**	**TG5200900**	**94.84 x 3.53**
90.0	**105.5**	**6.3**	**TG5300900**	**97.79 x 5.33**
92.0	**103.0**	**4.2**	**TG5200920**	**98.02 x 5.33**
95.0	106.0	4.2	TG5200950	101.19 x 3.53
95.0	110.5	6.3	TG5300950	100.97 x 5.33
100.0	**111.0**	**4.2**	**TG5201000**	**107.54 x 3.53**
100.0	**115.5**	**6.3**	**TG5301000**	**107.32 x 5.33**
105.0	116.0	4.2	TG5201050	110.72 x 3.53
110.0	**121.0**	**4.2**	**TG5201100**	**117.07 x 3.53**
115.0	126.0	4.2	TG5201150	120.24 x 3.53

The shaft diameters printed in **bold** type conform to the recommendations of ISO 3320.
Other dimensions and all intermediate sizes up to 2.200 mm diameter for Z51 and Z52 (2.600 mm for Z80) including imperial (inch) sizes can be supplied.



Shaft diameter	Groove diameter	Groove width	TSS Part No.	O-Ring size
d_N f8/h9	D_1 H9	L_1 +0.2		
120.0	131.0	4.2	TG5201200	126.59 x 3.53
125.0	**136.0**	**4.2**	**TG5201250**	**129.77 x 3.53**
130.0	141.0	4.2	TG5201300	136.12 x 3.53
130.0	145.5	6.3	TG5301300	139.07 x 5.33
135.0	150.5	6.3	TG5301350	142.24 x 5.33
138.0	153.5	6.3	TG5301380	145.42 x 5.33
140.0	**155.5**	**6.3**	**TG5301400**	**148.59 x 5.33**
145.0	160.5	6.3	TG5301450	151.77 x 5.33
150.0	165.5	6.3	TG5301500	158.12 x 5.33
160.0	**175.5**	**6.3**	**TG5301600**	**170.82 x 5.33**
170.0	185.5	6.3	TG5301700	177.17 x 5.33
180.0	**195.5**	**6.3**	**TG5301800**	**189.87 5.33**
190.0	205.5	6.3	TG5301900	202.57 x 5.33
200.0	**215.5**	**6.3**	**TG5302000**	**208.92 x 5.33**
210.0	225.5	6.3	TG5302100	221.62 x 5.33
220.0	**235.5**	**6.3**	**TG5302200**	**227.97 x 5.33**
240.0	255.5	6.3	TG5302400	247.02 x 5.33
250.0	**265.5**	**6.3**	**TG5302500**	**258.00 x 5.30**
280.0	**301.0**	**8.1**	**TG5402800**	**291.47 x 7.00**
300.0	321.0	8.1	TG5403000	310.00 x 7.00
320.0	**341.0**	**8.1**	**TG5403200**	**329.57 x 7.00**
350.0	371.0	8.1	TG5403500	365.00 x 7.00
360.0	**381.0**	**8.1**	**TG5403600**	**375.00 x 7.00**
400.0	421.0	8.1	TG5404000	412.00 x 7.00
420.0	441.0	8.1	TG5404200	430.66 x 7.00
450.0	471.0	8.1	TG5404500	462.00 x 7.00
480.0	501.0	8.1	TG5404800	494.16 x 7.00
500.0	521.0	8.1	TG5405000	515.00 x 7.00
600.0	621.0	8.1	TG5406000	615.00 x 7.00
700.0	728.0	9.5	TG5507000	713.00 x 8.40

The shaft diameters printed in **bold** type conform to the recommendations of ISO 3320.
Other dimensions and all intermediate sizes up to 2.200 mm diameter for Z51 and Z52 (2.600 mm for Z80) including imperial (inch) sizes can be supplied.

■ Installation recommendation - bore sealing

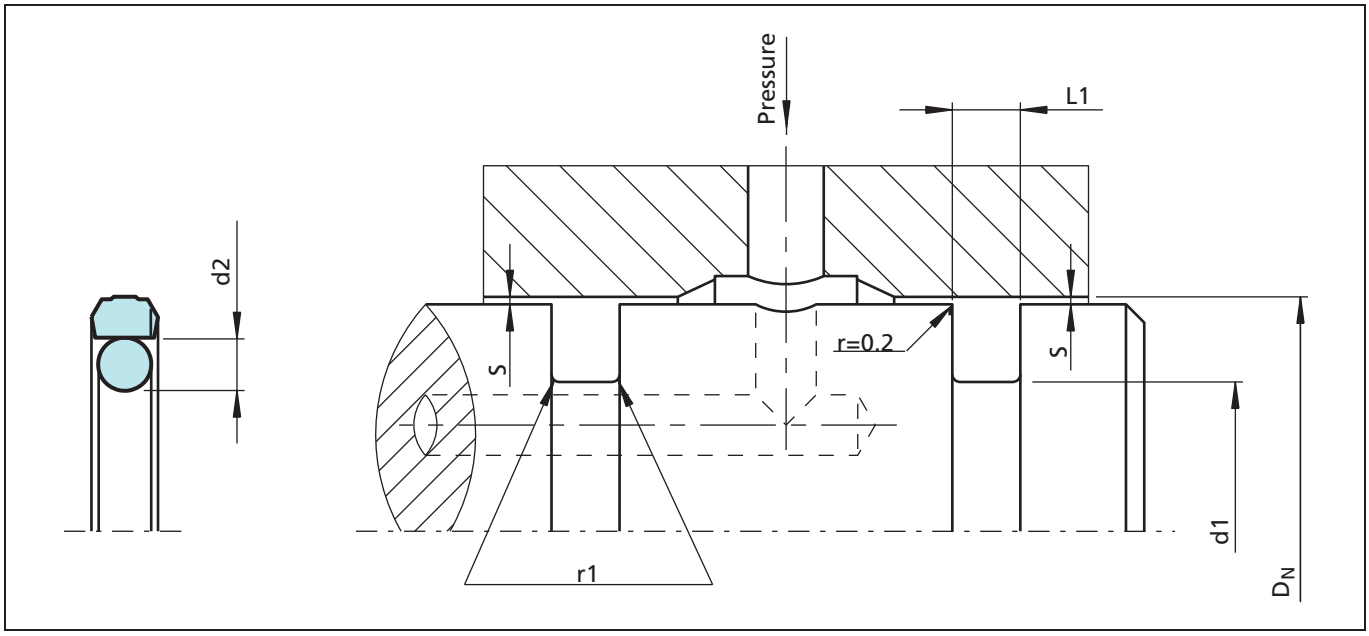

Figure 11 Installation drawing

Table VII Installation dimensions

Series No.	Bore diameter D_N H9		Groove diameter	Groove width	Radial clearance S max*		Radius	O-Ring cross sec.
	Standard range	Available range	d_1 h9	L_1 +0.2	10 MPa	30 MPa	r_1	d_2
TG60	12 - 19.9	10 - 24.9	D_N- 4.9	2.20	0.20	0.10	0.40	1.78
TG61	20 - 39.9	14 - 69.9	D_N- 7.5	3.20	0.25	0.15	0.60	2.62
TG62	40 - 132.9	22 - 199.9	D_N- 11.0	4.20	0.30	0.20	1.00	3.53
TG63	133 - 255.9	40 - 329.9	D_N- 15.5	6.30	0.35	0.25	1.30	5.33
TG64	256 - 669.9	133 - 690.0	D_N- 21.0	8.10	0.40	0.25	1.80	7.00
TG65	670 - 999.9	670 - 999.9	D_N- 28.0	9.50	0.50	0.30	2.50	8.40

* For max. temperature = 60° C at the seal.



Ordering Example

Zurcon®Roto Glyd Ring® S, complete with O-Ring, bore sealing, series TG62 (from Table VII).

Bore diameter: D_N = 80.0 mm
TSS Part No.: TG6200800 (from Table VIII)

Select the material from Table I. The corresponding code numbers are appended to the TSS Part No. (from Table VIII). Together they form the TSS Article No.
For all intermediate sizes not shown in Table VIII, the TSS Article No. can be determined from the example opposite.
** For diameters ≥ 1000.0 mm multiply only by factor 1.
Example: TG65 for diamter 1200.0 mm.
TSS Article No.: TG65**X1200** - Z52N.

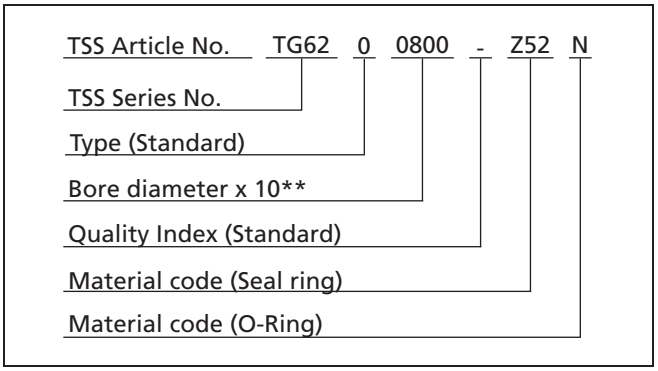

Table VIII Installation Dimensions / TSS Part No.

Bore diameter	Groove diameter	Groove width	TSS Part No.	O-Ring size
D_N H9	d_1 h9	L_1 +0.2		
12.0	**7.1**	**2.2**	**TG6000120**	**7.65 x 1.78**
14.0	9.1	2.2	TG6000140	9.25 x 1.78
15.0	10.1	2.2	TG6000150	10.82 x 1.78
16.0	**11.1**	**2.2**	**TG6000160**	**10.82 x 1.78**
18.0	13.1	2.2	TG6000180	13.20 x 1.80
20.0	**12.5**	**3.2**	**TG6100200**	**12.37 x 2.62**
22.0	14.5	3.2	TG6100220	13.94 x 2.62
25.0	**17.5**	**3.2**	**TG6100250**	**17.12 x 2.62**
28.0	20.5	3.2	TG6100280	20.29 x 2.62
30.0	22.5	3.2	TG6100300	23.47 x 2.62
32.0	24.5	3.2	TG6100320	25.07 x 2.62
35.0	27.5	3.2	TG6100350	28.24 x 2.62
40.0	**29.0**	**4.2**	**TG6200400**	**29.74 x 3.53**
42.0	31.0	4.2	TG6200420	31.32 x 3.53
45.0	34.0	4.2	TG6200450	34.52 x 3.53
48.0	37.0	4.2	TG6200480	37.69 x 3.53
50.0	**39.0**	**4.2**	**TG6200500**	**40.87 x 3.53**
52.0	41.0	4.2	TG6200520	42.00 x 3.50
55.0	44.0	4.2	TG6200550	44.04 x 3.53
60.0	49.0	4.2	TG6200600	50.39 x 3.53
63.0	**52.0**	**4.2**	**TG6200630**	**53.34 x 3.53**

The bore diameters printed in **bold** type conform to the recommendations of ISO 3320.
Other dimensions and all intermediate sizes up to 2.300 mm diameter for Z51 and Z52 (2.700 mm for Z80) including imperial (inch) sizes can be supplied.



Zurcon® Roto Glyd Ring® S

Bore diameter	Groove diameter	Groove width	TSS Part No.	O-Ring size
D_N H9	d_1 h9	L_1 +0.2		
65.0	49.5	6.3	TG6300650	50.17 x 5.33
70.0	59.0	4.2	TG6200700	59.92 x 3.53
75.0	64.0	4.2	TG6200750	65.00 x 3.50
80.0	**64.5**	**6.3**	**TG6300800**	**66.04 x 5.33**
80.0	**69.0**	**4.2**	**TG6200800**	**69.44 x 3.53**
84.0	**73.0**	**4.2**	**TG6200840**	**72.62 x 3.53**
85.0	74.0	4.2	TG6200850	75.79 x 3.53
90.0	79.0	4.2	TG6200900	78.97 x 3.53
95.0	84.0	4.2	TG6200950	85.32 x 3.53
100.0	**89.0**	**4.2**	**TG6201000**	**91.67 x 3.53**
105.0	94.0	4.2	TG6201050	94.84 x 3.53
110.0	99.0	4.2	TG6201100	101.19 x 3.53
115.0	104.0	4.2	TG6201150	104.37 x 3.53
120.0	109.0	4.2	TG6201200	110.72 x 3.53
125.0	**114.0**	**4.2**	**TG6201250**	**113.89 x 3.53**
130.0	119.0	4.2	TG6201300	120.24 x 3.53
135.0	119.5	6.3	TG6301350	120.02 x 5.33
140.0	124.5	6.3	TG6301400	126.37 x 5.33
150.0	134.5	6.3	TG6301500	135.89 x 5.33
150.0	139.0	4.2	TG6201500	139.29 x 3.53
160.0	**144.5**	**6.3**	**TG6301600**	**145.42 x 5.33**
170.0	154.5	6.3	TG6301700	158.12 x 5.33
180.0	164.5	6.3	TG6301800	164.47 x 5.33
190.0	174.5	6.3	TG6301900	177.17 x 5.33
200.0	**184.5**	**6.3**	**TG6302000**	**189.87 x 5.33**
210.0	194.5	6.3	TG6302100	196.22 x 5.33
220.0	204.5	6.3	TG6302200	208.92 x 5.33
230.0	214.5	6.3	TG6302300	215.27 x 5.33
240.0	224.5	6.3	TG6302400	227.92 x 5.33
250.0	**234.5**	**6.3**	**TG6302500**	**240.67 x 5.33**
280.0	259.0	8.1	TG6402800	260.00 x 7.00
300.0	279.0	8.1	TG6403000	280.00 x 7.00
320.0	**299.0**	**8.1**	**TG6403200**	**300.00 x 7.00**

The bore diameters printed in **bold** type conform to the recommendations of ISO 3320.
Other dimensions and all intermediate sizes up to 2.300 mm diameter for Z51 and Z52 (2.700 mm for Z80) including imperial (inch) sizes can be supplied.



Bore diameter	Groove diameter	Groove width	TSS Part No.	O-Ring size
D_N H9	d_1 h9	L_1 +0.2		
350.0	329.0	8.1	TG643500	329.57 x 7.00
400.0	**379.0**	**8.1**	**TG6404000**	**380.37 x 7.00**
420.0	399.0	8.1	TG6404200	400.00 x 7.00
450.0	429.0	8.1	TG6404500	430.66 x 7.00
480.0	459.0	8.1	TG6404800	462.00 x 7.00
500.0	**479.0**	**8.1**	**TG6405000**	**481.38 x 7.00**
600.0	579.0	8.1	TG6406000	582.68 x 7.00
700.0	672.0	9.5	TG6507000	670.00 x 8.40

The bore diameters printed in **bold** type conform to the recommendations of ISO 3320.
Other dimensions and all intermediate sizes up to 2.300 mm diameter for Z51 and Z52 (2.700 mm for Z80) including imperial (inch) sizes can be supplied.

Notes

Contact your local marketing company for further information:

Europe	Telephone
AUSTRIA - Vienna (ALBANIA, BOSNIA AND HERZEGOVINA, MACEDONIA, SERBIA AND MONTENEGRO, SLOVENIA)	+43 (0) 1 406 47 33
BELGIUM - Dion-Valmont (LUXEMBOURG)	+32 (0) 10 22 57 50
BULGARIA - Sofia (ROMANIA)	+359 (0)2 969 95 99
CROATIA - Zagreb	+385 (0) 1 24 56 387
CZECH REPUBLIC - Rakovnik (SLOVAKIA)	+420 313 529 111
DENMARK - Hillerød	+45 48 22 80 80
FINLAND - Vantaa (ESTONIA, LATVIA)	+358 (0) 207 12 13 50
FRANCE - Maisons-Laffitte	+33 (0) 1 30 86 56 00
GERMANY - Stuttgart	+49 (0) 711 7864 0
GREECE	+41 (0) 21 631 41 11
HUNGARY - Budaörs	+36 (0) 23 50 21 21
ITALY - Livorno	+39 0586 22 6111
THE NETHERLANDS - Barendrecht	+31 (0) 10 29 22 111
NORWAY - Oslo	+47 22 64 60 80
POLAND - Warsaw (LITHUANIA, UKRAINE, BELARUS)	+48 (0) 22 863 30 11
RUSSIA - Moscow	+7 495 982 39 21
SPAIN - Madrid (PORTUGAL)	+34 (0) 91 71057 30
SWEDEN - Jönköping	+46 (0) 36 34 15 00
SWITZERLAND - Crissier	+41 (0) 21 631 41 11
TURKEY	+41 (0) 21 631 41 11
UNITED KINGDOM - Solihull (EIRE)	+44 (0) 121 744 1221
AFRICA REGIONAL	+41 (0) 21 631 41 11
MIDDLE EAST REGIONAL	+41 (0) 21 631 41 11

Americas	Telephone
AMERICAS - REGIONAL	+1 260 749 9631
BRAZIL - São Paulo	+55 11 3372 4500
CANADA - Etobicoke, ON	+1 416 213 9444
MEXICO - Mexico City	+52 55 57 19 50 05
USA, East - Conshohocken, PA	+1 610 828 3209
USA, Great Lakes - Fort Wayne, IN	+1 260 482 4050
USA, Midwest - Lombard, IL	+1 630 268 9915
USA, Mountain - Broomfield, CO	+1 303 469 1357
USA, Northern California - Fresno, CA	+1 559 449 6070
USA, Northwest - Portland, OR	+1 503 595 6565
USA, South - N. Charleston, SC	+1 843 747 7656
USA, Southwest - Houston, TX	+1 713 461 3495
USA, West - Torrance, CA	+1 310 371 1025

Asia Pacific	Telephone
ASIA PACIFIC REGIONAL	+65 6 577 1778
CHINA - Hong Kong	+852 2366 9165
CHINA - Shanghai	+86 (0) 21 6145 1830
INDIA - Bangalore	+91 (0) 80 2245 5157
JAPAN - Tokyo	+81 (0) 3 5633 8008
KOREA - Anyang	+82 (0) 31 386 3283
MALAYSIA - Kuala Lumpur	+60 (0) 3 9059 6388
TAIWAN - Taichung	+886 4 2382 8886
THAILAND - Bangkok	+66 (0) 2732-2861
SINGAPORE and all other countries in Asia	+65 6 577 1778

www.tss.trelleborg.com

TRELLEBORG
SEALING SOLUTIONS

99GBTLCATAE0808