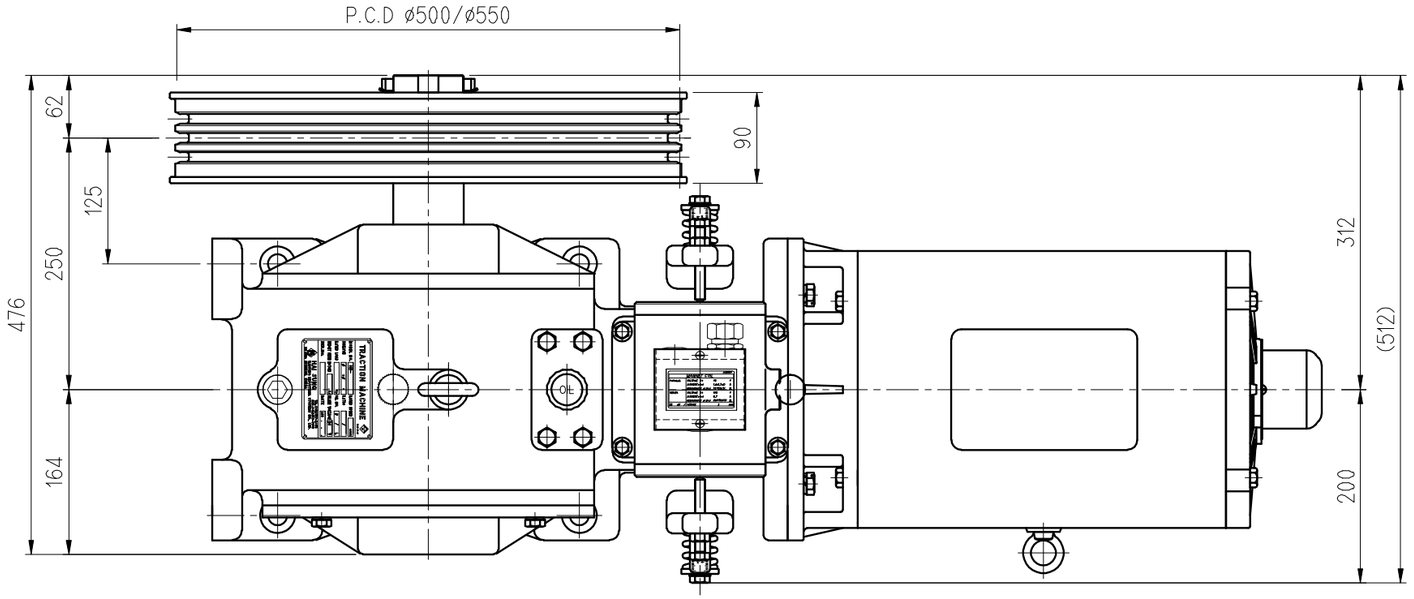
P.C.D ø500/ø550
62
125
250
476
164
90
312
(512)
200

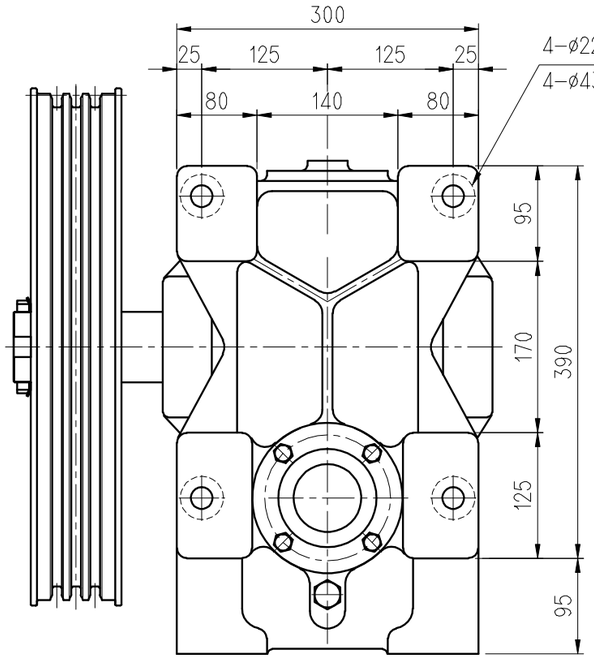
300
25
125
125
25
80
140
80
95
170
390
125
95

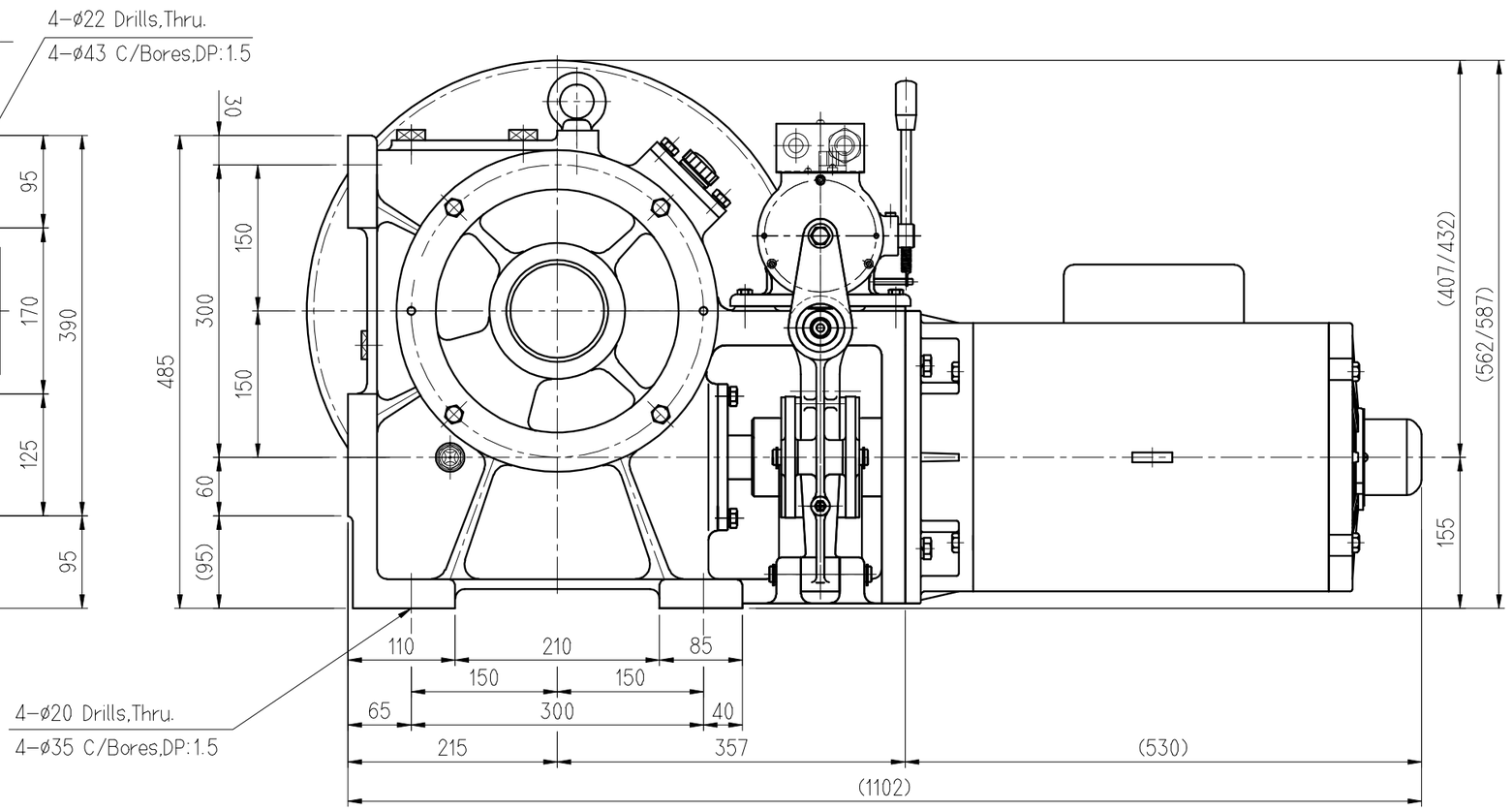
4–ø22 Drills,Thru.
4–ø43 C/Bores,DP:1.5
30
150
300
150
485
60
(95)
(407/432)
(562/587)
155
110
210
85
150
150
65
300
40
215
357
(530)
(1102)
4–ø20 Drills,Thru.
4–ø35 C/Bores,DP:1.5