Scrapers

Selection criteria for Scrapers

Seal	Application				Standard	Size range	Groove type	Technical Data*		Recommended Seal Material
Type	Field of Application							Temp. range**	Speed	
		Light	Medium	Heavy	ISO/DIN	mm	mm	°C	m/s	
Turcon® Excluder® 2 	산업용 유압 장치	•	•	•	6195 Type D	4–2600	Split<30 Closed>30	–45/+200	15	M12
	공작기계	•	•	•						
	사출 성형기	•	•	•						
	서버 유압 실린더	•	•	•						T46
	로봇 분야	•	•	•						
Turcon® Excluder® 5 	유압 실린더	•	•	•	6195 Type D	20–2600	Split<30 Closed>30	–45/+200	15	M12
	프레스	•	•	•		20–2200		–45/+110	2	T46
	제철 설비	•	•	•						Z54
Zurcon® Excluder® 500 	이동식 유압 장비	•	•	•	6195 Type D	12–130	Split<25 Closed>25	–30/+80	1	Z05
Turcon® Excluder® F 	기계 장비	•	•		–	19–1000	Closed<19	–45/+200	15	M12
	자동화	•	•							
	밸브	•	•							T46
	소형 산업용 유압장비	•	•							
Turcon® Excluder® 1 & 113 	유압 실린더	•	•		6195 Type D	12–1000	Split<30 Closed>30	–45/+200	15	M12
	공작기계	•	•							T46
	서버 유압 실린더	•	•					–45/+110	2	Z80/Z82
Scraper DA17 	산업용 유압장비	•	•		–	10–440	Split<18 Closed>18	–30/+110	1	NBR
	기계장비	•	•							
	프레스	•	•							
Zurcon® Scraper DA22 	유압 실린더	•	•	•	6195 Type C	5–180	Split<18 Closed>18	–35/+100	1	Z201
	산업용 유압 실린더	•	•	•						

* The data above are maximum values, and cannot be used at the same time.
**Temperature range is depending on choice of Elastomer material & media.

Scrapers

Selection criteria for Scrapers

Seal	Application				Standard	Size range	Technical Data*			Recommended Seal Material
Type	Field of Application						Temp. range**	Speed	Pressure	
		Light	Medium	Heavy	ISO/DIN	mm	°C	m/s	MPa max.	
Zurcon® Scraper DA24 	이동식 유압 장비	•	•	•	–	45–290	Closed	–35/ +110	0.5	Z201
	건설 기계	•	•	•						
	농업 기계	•	•	•						
Scraper WRM 	농기계용 실린더	•	•		–	12–260	Closed	–30/ +110	1	NBR
	Handling equipment	•	•							
Zurcon® Scraper ASW 	농기계용 실린더	•	•		–	8–125	Split<14 Closed>14	–35/ +100	1	Z201
	이동식 유압 기계	•	•							
Zurcon® Scraper WNE 	농기계용 실린더	•	•	•	–	8–250	Closed	–35/ +100	1	Z201
	이동식 유압 기계	•	•	•						
Zurcon® Scraper WNV 	농기계용 실린더	•	•	•	6195 Type A	16–100	Closed	–35/ +100	1	Z201
	이동식 유압 기계	•	•	•						
	유압 실린더	•	•	•						
	리프트 트럭 유압실린더	•	•	•						
	특장 차량	•	•	•						
	조향 유압실린더	•	•	•						
Scraper WRM/C-WSA 	농기계용 실린더	•	•		–	16–120	Open	–30/ +110	1	NBR + Metal
	유압 실린더	•	•							
Zurcon® Scraper SWP 	건설 기계		•	•	–	25–290	Open	–35/ +135	1	Z201 + Metal
	링크 핀 씰링		•	•						
Metal Scraper 	농기계용 실린더	•	•	•	–	12–220	Open	–40/ +110	1	Metal + NBR + Brass
	이동식 유압 기계	•	•	•						
	유압 실린더	•	•	•						

* The data above are maximum values, and cannot be used at the same time.
**Temperature range is depending on choice of Elastomer material & media.

Turcon® Excluder® 5

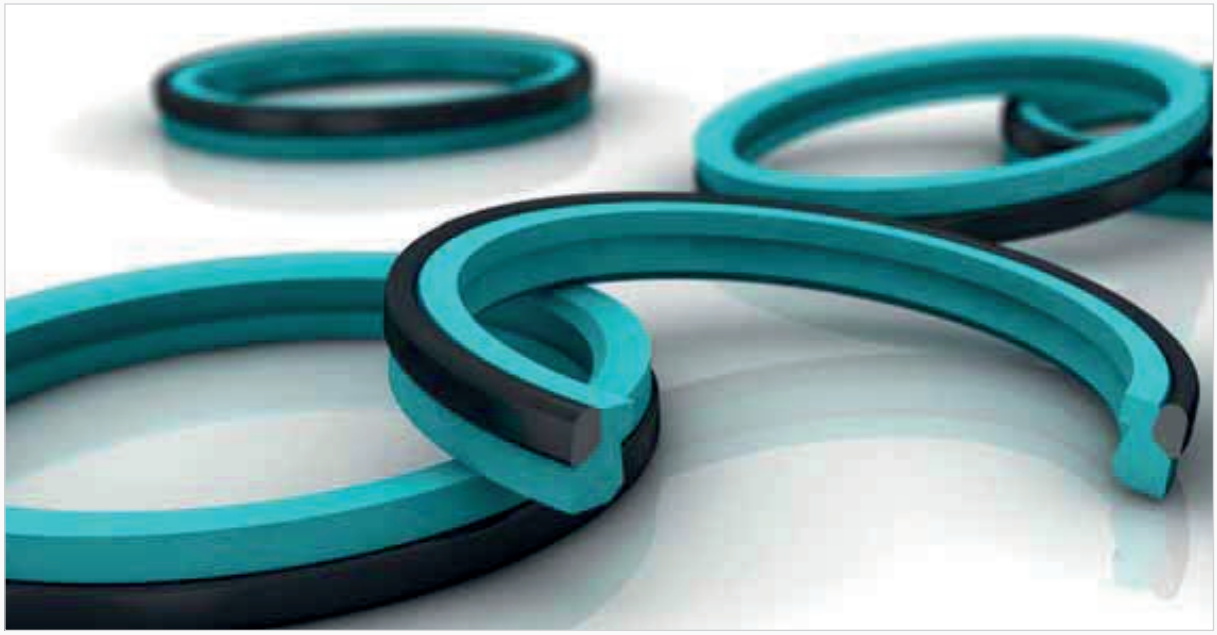

Double-Acting
Rubber Energized Double-acting Scraper

Materials: Turcon®, Zurcon® & Elastomer



개요

Scraper Ring은 유압 실린더에서 수직으로 움직이는 플랜저, 로드 등에 고정시켜 사용한다.

유압 시스템이 작동 중에 오염 물질이 유입되면 Seal, Guide, Wear Ring에 상처를 주어 내구성에 영향을 준다. 따라서 Scraper는 오염 물질을 막아주는 역할을 하여 Seal, Guide, Bearing 등의 내구성 향상에 도움을 준다.

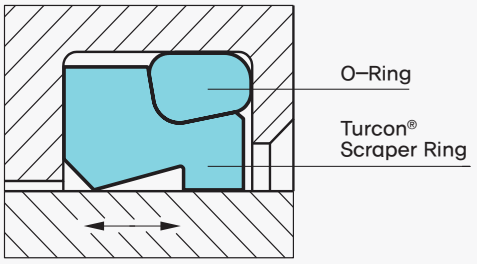

Turcon® Excluder® 5

적용 범위

- 속도 : 최대 15 m/s for Turcon®
  최대 2 m/s for Zurcon®
- 온도 : −45 ℃ ~ +200 ℃ (Turcon®)
  −45 ℃ ~ +110 ℃ (Zurcon® Z53/Z54)
  −60 ℃ ~ + 80 ℃ (Zurcon® Z80)
  (O-Ring 재질에 따라)
- 매체 : 광물 베이스의 유압 작동유,
  난연성 유압유,
  친환경 유압유 (Bio-oils),
  인산 에스테르,
  물, 공기,
  Scraper와 O-Ring 재질에 따른 매체류.

※ 주의사항

- 위에 제시된 최대 수치는 같은 동작 시간대에 동시에 유효할 수는 없다.
- 최대 속도는 재질, 타입, 압력, 온도, 틈새 크기에 따라 좌우된다.
- 온도 범위 또한, 매체 조건에 따라 영향을 받는다.

장점

- 작은 공간에 설치가 용이하다.
- Groove 배열이 간단하다.
- 표면에 점성 물질 존재 시, Wiping 효과가 우수하다.
- 작동 시, Stick-Slip 현상이 없다.
- 내마모성이 매우 좋아, 장기간 사용이 가능하다.

특징

Turcon® Excluder® 5는 탄성체 O-Ring과 Turcon® 재질의 고체 Seal로 구성되었다.

Scraper 기능은 Excluder® Ring에 의해서 수행되고, 탄성체 O-Ring은 일정하게 이동되는 표면에 대해 Scraper Lip을 효과적으로 밀착시키는 역할을 한다.

Excluder® 5는 로드와 플렌저에 대해 Scraper 역할을 하며 왕복 운동, 진동, 또는 나선 운동이 있는 유.공압, 화학공업, 식품공업 등에 적용된다.

재질

아래 오일 환경에서의 유압 왕복 운동, 짧은 구간 운동, 또는 나선형 운동에 적용되는 가장 포괄적인 재질이다.
(광물류, 난연성 유압유 HFC, 인산 에스테르, Bio-oils, 윤활성이 적은 오일류.)

• Turcon® Excluder® 5	:	Turcon® M12
• O-Ring	:	NBR, 70 Shore A N FKM, 70 Shore A V
• Set Code	:	M12N, or M12V

윤활 조건이 좋거나 광물 베이스의 유압유 조건에서 Heavy한 왕복 적용 시,

• Turcon® Excluder® 5	:	Turcon® T46
• O-Ring	:	NBR, 70 Shore A N FKM, 70 Shore A V
• Set Code	:	T46N, or T46V

*다양한 적용을 위한 재질 선택은 표 참조.

재질 / Materials for Turcon® Excluder® 5

Material, Application Properties	Code	O-Ring Material Shore A	Code	O-Ring Operating Temp. °C*	Mating Surface Material	Speed max. m/s
Turcon® M12 • **First material choice** for Seals for Linear Motion. • Overall improved properties. • For new constructions and updating. • For all commonly applied Hydraulic Fluids, including Fluids with Low Lubrication performance. • Lowest Friction & best Sliding properties. • Lowest Wear on scrapers. • Improved Absorption of abrasive contaminants. • No wear, or abrasion of counter surface. • Mineral Fiber & Additives filled. Colour : **Dark grey.**	M12	NBR–70	N	–30 ~ +100	Steel Steel hardened Steel Chrome–plated (Rod) Cast iron Stainless Steel Titanium	15
		NBR–70 Low Temp.	T	–45 ~ +80		
		FKM–70	V	–10 ~ +200		
Turcon® T40 • For Lubricating & Non–Lubricating Fluids. • High Frequency & Short Strokes. • **Water Hydraulics.** • Surface texture is NOT suitable for Gas sealing. Colour : **Grey.**	T40	NBR–70	N	–30 ~ +100	Steel Steel Chrome–plated (Rod) Cast iron Stainless Steel Aluminium	15
		NBR–70 Low Temp.	T	–45 ~ +80		
		FKM–70	V	–10 ~ +200		
		EPDM–70	E**	–45 ~ +145		
Turcon® T46 • For Lubricated Hydraulics in Linear Motion. • High Compressive strength. • High Extrusion Resistance. • Very good Sliding & Wear properties. • BAM Tested. • Bronze filled. Colour : **Light to Dark brown,** (which may have variations in shading.)	T46	NBR–70	N	–30 ~ +100	Steel hardened Steel Chrome–plated (Rod) Cast iron	15
		NBR–70 Low Temp.	T	–45 ~ +80		
		FKM–70	V	–10 ~ +200		
Zurcon® Z53 • For Mineral oil based Fluids. • Very High Abrasion & Extrusion resistance. • For counter surface with rougher surface finish. • Limited Chemical Resistance. • Max. working Temperature 110 ℃. • Cast Polyurethane. Colour : **Yellow to Light brown.**	Z53	NBR–70	N	–30 ~ +100	Steel Steel hardened Cast iron Stainless Steel Ceramic coating	2
		NBR–70 Low Temp.	T	–45 ~ +80		
Zurcon® Z80 • For Lubricating & Non–Lubricating Fluids. • Water based fluids, air & gases. • Dry air pneumatics. • High Abrasion & Extrusion Resistance. • For service in Abrasive conditions & media with particles. • Good Chemical Resistance. • Limited Temperature capability. (–60 ℃ ~ +80 ℃) • UHMWPE (Ultra High Molecular Weight Polyethylene) Colour : **White to Off–white.**	Z80	NBR–70	N	–30 ~ (+100)	Steel Steel Chrome–plated (Rod) Stainless Steel Aluminium Ceramic coating	2
		NBR–70 Low Temp.	T	–45 ~ +80		
		EPDM–70	E**	–45 ~ (+145)		

* The O–Ring Operating Temperature is only valid in Mineral Hydraulic Oil. (except EPDM)
** Material NOT suitable for Mineral oils.
BAM : Tested by "Bundesantalt Materialprufung, Germany."

Highlighted Materials are standard.

Installation Recommendation

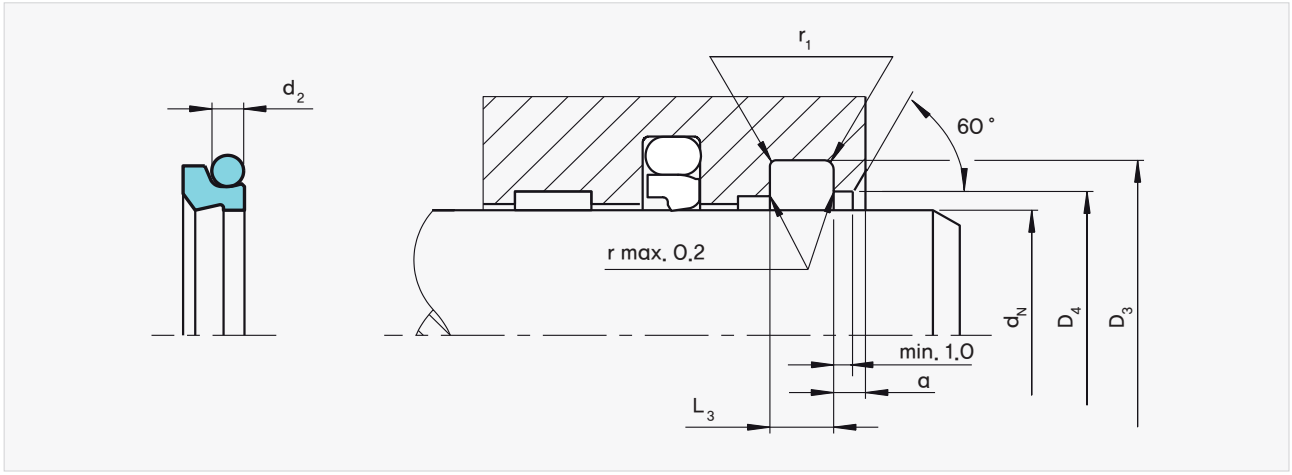

Installation drawing

Installation Dimensions – Standard Recommendations

Series No.	Rod Diameter d_N f8/h9		Groove Diameter	Groove Width	Bore Diameter	Step Width	O-Ring Cross section
	Recommended Range	Extended Range	D_3 H9	L_3 +0.2	D_4 H11	a min.	d_2
WE50	19.0 – 39.9	19.0 – 100.0	d_N + 7.6	4.2	d_N + 1.5	3.0	2.62
WE51	40.0 – 69.9	30.0 – 200.0	d_N + 8.8	6.3	d_N + 1.5	3.0	2.62
WE52	70.0 – 139.9	70.0 – 360.0	d_N + 12.2	8.1	d_N + 2.0	4.0	3.53
WE53	140.0 – 399.9	100.0 – 650.0	d_N + 16.0	9.5	d_N + 2.5	5.0	5.33
WE54	400.0 – 649.9	200.0 – 650.0	d_N + 24.0	14.0	d_N + 2.5	8.0	7.00
WE55	650.0 – 999.9	400.0 – 999.9	d_N + 27.3	16.0	d_N + 2.5	10.0	8.40
WE55X	1000 – 2600		d_N + 27.3	16.0	d_N + 2.5	10.0	8.40

주문 예

Turcon® Excluder® 5와 함께 적용되는 O-Ring 규격과 재질 선택은, 표를 참고하시기 바랍니다.

- Rod diameter : d_N = 50.0mm
- TSS Series No. WE51
- TSS Part No. WE5100500

TSS Article No. WE51 00500 – M12 N

- WE51 — TSS Series No.
- 00500 — Rod diameter x 10*
- M12 — Quality Index (Standard)
- N — Material Code (Scraper)
- Material Code (O-Ring)

* For diameters ≥ 1000.0mm multiply only by factor 1.
Example : WE55 for diameter 1200.0mm
TSS Article No. : WE55**X1200** – M12N.

Installation Dimensions / TSS Part No.

Rod Diameter	Groove Diameter	Groove Width	Bore Diameter	Radius	Step Width	TSS Part No.	O-Ring Dimensions
d_N f8/h9	D_3 H9	L_3 +0.2	D_4 H11	r_1 max.	a min.		
20.0	27.6	4.2	21.5	0.8	3.0	WE5000200	21.89 × 2.62
25.0	32.6	4.2	26.5	0.8	3.0	WE5000250	28.24 × 2.62
28.0	35.6	4.2	29.5	0.8	3.0	WE5000280	29.82 × 2.62
30.0	37.6	4.2	31.5	0.8	3.0	WE5000300	32.99 × 2.62
32.0	39.6	4.2	33.5	0.8	3.0	WE5000320	34.59 × 2.62
36.0	43.6	4.2	37.5	0.8	3.0	WE5000360	37.77 × 2.62
40.0*	48.8	6.3	41.5	0.8	3.0	WE5100400	44.12 × 2.62
42.0	50.8	6.3	43.5	0.8	3.0	WE5100420	45.69 × 2.62
45.0*	53.8	6.3	46.5	0.8	3.0	WE5100450	48.90 × 2.62
50.0*	58.8	6.3	51.5	0.8	3.0	WE5100500	53.64 × 2.62
55.0	63.8	6.3	56.5	0.8	3.0	WE5100550	58.42 × 2.62
56.0*	64.8	6.3	57.5	0.8	3.0	WE5100560	59.99 × 2.62
60.0	68.8	6.3	61.5	0.8	3.0	WE5100600	63.17 × 2.62
63.0*	71.8	6.3	64.5	0.8	3.0	WE5100630	66.34 × 2.62
65.0	73.8	6.3	66.5	0.8	3.0	WE5100650	67.95 × 2.62
70.0*	78.8	6.3	71.5	0.8	3.0	WE5100700	72.69 × 2.62
70.0*	82.2	8.1	72.0	1.0	4.0	WE5200700	75.79 × 3.53
75.0	87.2	8.1	77.0	1.0	4.0	WE5200750	78.97 × 3.53
80.0*	88.8	6.3	81.5	1.0	3.0	WE5100800	82.22 × 2.62
80.0*	92.2	8.1	82.0	1.0	4.0	WE5200800	85.32 × 3.53
85.0	97.2	8.1	87.0	1.0	4.0	WE5200850	88.49 × 3.53
90.0*	98.8	6.3	91.5	1.0	3.0	WE5100900	94.92 × 2.62
90.0*	102.2	8.1	92.0	1.0	4.0	WE5200900	94.84 × 3.53
97.0	109.2	8.1	99.0	1.0	4.0	WE5200970	101.19 × 3.53
99.0	111.2	8.1	101.0	1.0	4.0	WE5200990	104.37 × 3.53
100.0*	108.8	6.3	101.5	1.0	3.0	WE5101000	101.27 × 2.62
100.0*	112.2	8.1	102.0	1.0	4.0	WE5201000	104.37 × 3.53
105.0	117.2	8.1	107.0	1.0	4.0	WE5201050	110.72 × 3.53
110.0*	118.8	6.3	111.5	1.0	3.0	WE5101100	113.97 × 2.62
110.0*	122.2	8.1	112.0	1.0	4.0	WE5201100	113.89 × 3.53
115.0	127.2	8.1	117.0	1.0	4.0	WE5201150	120.24 × 3.53
120.0	132.2	8.1	122.0	1.0	4.0	WE5201200	123.42 × 3.53
125.0*	133.8	6.3	126.5	1.0	3.0	WE5101250	126.67 × 2.62
125.0*	137.2	8.1	127.0	1.0	4.0	WE5201250	129.77 × 3.53
125.4	137.6	8.1	127.4	1.0	4.0	WE5201254	129.77 × 3.53
130.0	142.2	8.1	132.0	1.0	4.0	WE5201300	136.12 × 3.53

*Installation in Grooves according to ISO 6195, Type D.

Installation Dimensions / TSS Part No.

Rod Diameter	Groove Diameter	Groove Width	Bore Diameter	Radius	Step Width	TSS Part No.	O-Ring Dimensions
d_N f8/h9	D_3 H9	L_3 +0.2	D_4 H11	r_1 max.	a min.		
135.0	147.2	8.1	137.0	1.0	4.0	WE5201350	139.29 × 3.53
140.0*	152.2	8.1	142.0	1.0	4.0	WE5201400	145.64 × 3.53
140.0*	156.0	9.5	142.5	1.5	5.0	WE5301400	145.42 × 5.33
140.5	156.5	9.5	143.0	1.5	5.0	WE5301405	145.42 × 5.33
150.0	166.0	9.5	152.5	1.5	5.0	WE5301500	151.77 × 5.33
153.0	169.0	9.5	155.5	1.5	5.0	WE5301530	158.12 × 5.33
155.0	171.0	9.5	157.5	1.5	5.0	WE5301550	158.12 × 5.33
160.0*	172.2	8.1	162.0	1.0	4.0	WE5201600	164.69 × 3.53
160.0*	176.0	9.5	162.5	1.5	5.0	WE5301600	164.47 × 5.33
165.0	181.0	9.5	167.5	1.5	5.0	WE5301650	170.82 × 5.33
170.0	186.0	9.5	172.5	1.5	5.0	WE5301700	177.17 × 5.33
175.0	191.0	9.5	177.5	1.5	5.0	WE5301750	177.17 × 5.33
180.0*	192.2	8.1	182.0	1.0	4.0	WE5201800	183.74 × 3.53
180.0*	196.0	9.5	182.5	1.5	5.0	WE5301800	183.52 × 5.33
188.2	204.2	9.5	190.7	1.5	5.0	WE5301882	189.87 × 5.33
190.0	206.0	9.5	192.5	1.5	5.0	WE5301900	196.22 × 5.33
192.0	208.0	9.5	194.5	1.5	5.0	WE5301920	196.22 × 5.33
200.0*	212.2	8.1	202.0	1.0	4.0	WE5202000	202.79 × 3.53
200.0*	216.0	9.5	202.5	1.5	5.0	WE5302000	202.57 × 5.33
211.0	227.0	9.5	213.5	1.5	5.0	WE5302110	215.27 × 5.33
220.0*	232.2	8.1	222.0	1.0	4.0	WE5202200	221.84 × 3.53
220.0*	236.0	9.5	222.5	1.5	5.0	WE5302200	221.62 × 5.33
240.0	256.0	9.5	242.5	1.5	5.0	WE5302400	247.02 × 5.33
250.0*	262.2	8.1	252.0	1.0	4.0	WE5202500	253.59 × 3.53
250.0*	266.0	9.5	252.5	1.5	5.0	WE5302500	253.37 × 5.33
260.0	276.0	9.5	262.5	1.5	5.0	WE5302600	266.07 × 5.33
270.0	286.0	9.5	272.5	1.5	5.0	WE5302700	278.77 × 5.33
280.0*	292.2	8.1	282.0	1.5	4.0	WE5202800	278.99 × 3.53
280.0*	296.0	9.5	282.5	1.5	5.0	WE5302800	278.77 × 5.33
300.0	316.0	9.5	302.5	1.5	5.0	WE5303000	304.17 × 5.33
320.0*	332.2	8.1	322.0	1.5	4.0	WE5203200	329.79 × 3.53
320.0*	336.0	9.5	322.5	1.5	5.0	WE5303200	329.57 × 5.33
330.0	346.0	9.5	332.5	1.5	5.0	WE5303300	329.57 × 5.33
350.0	366.0	9.5	352.5	1.5	5.0	WE5303500	354.97 × 5.33
360.0*	372.2	8.1	362.0	1.5	4.0	WE5203600	355.19 × 3.53
360.0*	376.0	9.5	362.5	1.5	5.0	WE5303600	365.00 × 5.30

*Installation in Grooves according to ISO 6195, Type D.

Installation Dimensions / TSS Part No.

Rod Diameter	Groove Diameter	Groove Width	Bore Diameter	Radius	Step Width	TSS Part No.	O-Ring Dimensions
d_N f8/h9	D_3 H9	L_3 +0.2	D_4 H11	r_1 max.	a min.		
380.0	396.0	9.5	382.5	1.5	5.0	WE5303800	380.37 × 5.33
400.0	424.0	14.0	402.5	1.5	8.0	WE5404000	405.26 × 7.00
440.0	464.0	14.0	442.5	1.5	8.0	WE5404400	443.36 × 7.00
450.0	474.0	14.0	452.5	1.5	8.0	WE5404500	456.06 × 7.00
480.0	504.0	14.0	482.5	1.5	8.0	WE5404800	481.46 × 7.00
500.0	524.0	14.0	502.5	1.5	8.0	WE5405000	506.86 × 7.00
560.0	584.0	14.0	562.5	1.5	8.0	WE5405600	557.66 × 7.00
600.0	624.0	14.0	602.5	1.5	8.0	WE5406000	608.08 × 7.00
650.0	677.3	16.0	652.5	2.0	10.0	WE5506500	649.00 × 8.40
680.0	707.3	16.0	682.5	2.0	10.0	WE5506800	692.00 × 8.40
700.0	727.3	16.0	702.5	2.0	10.0	WE5507000	712.00 × 8.40
750.0	777.3	16.0	752.5	2.0	10.0	WE5507500	762.00 × 8.40
800.0	827.3	16.0	802.5	2.0	10.0	WE5508000	812.00 × 8.40
850.0	877.3	16.0	852.5	2.0	10.0	WE5508500	862.00 × 8.40
900.0	927.3	16.0	902.5	2.0	10.0	WE5509000	912.00 × 8.40
950.0	977.3	16.0	952.5	2.0	10.0	WE5509500	962.0 × 8.40
1000.0	1027.3	16.0	1002.5	2.0	10.0	WE55X1000	1012.0 × 8.40
1800.0	1827.3	16.0	1802.5	2.0	10.0	WE55X1800	1812.0 × 8.40
2600.0	2627.3	16.0	2602.5	2.0	10.0	WE55X2600	2612.0 × 8.40

Turcon® Excluder® 2

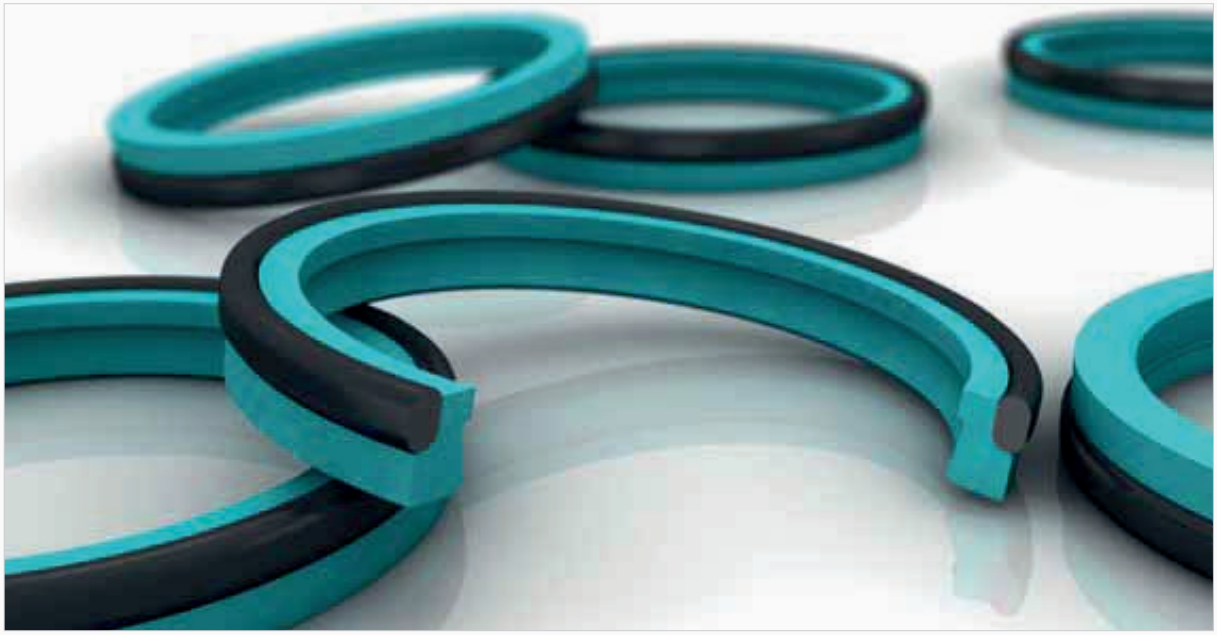

Double-Acting
Rubber Energized Double-acting Scraper

Materials: Turcon®, Zurcon® & Elastomer

Installation Recommendation

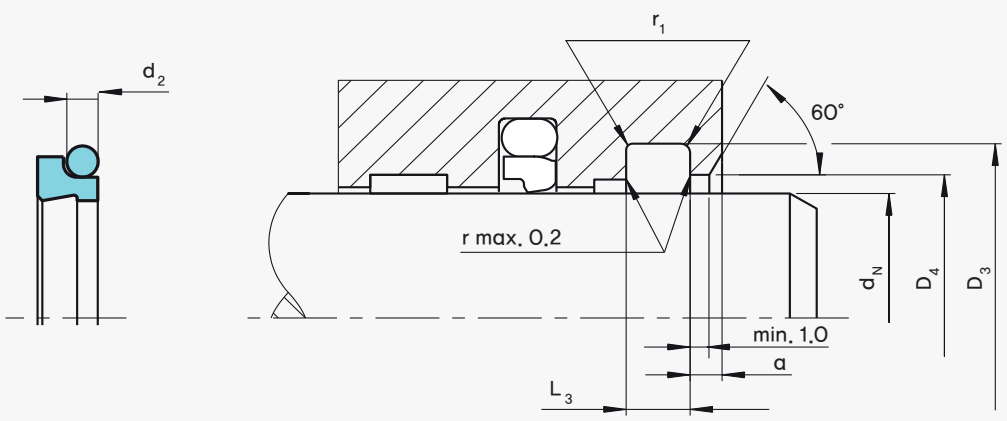

Installation drawing

Installation Dimensions – Standard Recommendations

Series No.	Rod Diameter d_N f8/h9		Groove Diameter	Groove Width	Bore Diameter	Step Width	O-Ring Cross section
	Recommended Range	Extended Range	D_3 H9	L_3 +0.2	D_4 H11	a min.	d_2
WE30	4.0 – 11.9	4.0 – 130.0	d_N + 4.8	3.7	d_N + 1.5	2.0	1.78
WE31	12.0 – 64.9	10.0 – 245.0	d_N + 6.8	5.0	d_N + 1.5	2.0	2.62
WE32	65.0 – 250.9	25.0 – 400.0	d_N + 8.8	6.0	d_N + 1.5	3.0	3.53
WE33	251.0 – 420.9	40.0 – 655.0	d_N + 12.2	8.4	d_N + 2.0	4.0	5.33
WE34	421.0 – 650.9	110.0 – 655.0	d_N + 16.0	11.0	d_N + 2.0	4.0	7.00
WE35	651.0 – 999.9	140.0 – 999.9	d_N + 20.0	14.0	d_N + 2.5	5.0	8.40
WE35X	1000 – 2600		d_N + 20.0	14.0	d_N + 2.5	5.0	8.40

For diameters > 400mm, we recommend the use of Turcon® Excluder® 5.

주문 예

Turcon® Excluder® 2와 함께 적용되는 O-Ring 규격과 재질 선택은, 표를 참고하시기 바랍니다.

- Rod diameter : d_N = 50.0mm
- TSS Series No. WE31
- TSS Part No. WE3100500

TSS Article No. WE31 00500 – M12 N

- TSS Series No.
- Rod diameter x 10*
- Quality Index (Standard)
- Material Code (Scraper)
- Material Code (O-Ring)

* For diameters ≥ 1000.0mm multiply only by factor 1.
Example : WE35 for diameter 1200.0mm
TSS Article No. : WE35 **X1200** – M12N.

Installation Dimensions / TSS Part No.

Rod Diameter	Groove Diameter	Groove Width	Bore Diameter	Radius	Step Width	TSS Part No.	O-Ring Dimensions
d_N f8/h9	D_3 H9	L_3 +0.2	D_4 H11	r_1 max.	a min.		
4.0*	8.8	3.7	5.5	0.4	2.0	WE3000040	5.60 × 1.80
5.0*	9.8	3.7	6.5	0.4	2.0	WE3000050	6.70 × 1.80
6.0*	10.8	3.7	7.5	0.4	2.0	WE3000060	7.65 × 1.78
8.0*	12.8	3.7	9.5	0.4	2.0	WE3000080	9.50 × 1.80
10.0*	14.8	3.7	11.5	0.4	2.0	WE3000100	11.80 × 1.80
12.0*	18.8	5.0	13.5	0.8	2.0	WE3100120	13.94 × 2.62
14.0*	20.8	5.0	15.5	0.8	2.0	WE3100140	15.54 × 2.62
15.0	21.8	5.0	16.5	0.8	2.0	WE3100150	17.12 × 2.62
16.0	20.8	3.7	17.5	0.4	2.0	WE3000160	17.17 × 1.78
16.0*	22.8	5.0	17.5	0.8	2.0	WE3100160	18.00 × 2.65
18.0	22.8	3.7	19.5	0.4	2.0	WE3000180	19.00 × 1.80
18.0*	24.8	5.0	19.5	0.8	2.0	WE3100180	20.29 × 2.62
20.0*	26.8	5.0	21.5	0.8	2.0	WE3100200	21.89 × 2.62
22.0*	28.8	5.0	23.5	0.8	2.0	WE3100220	23.52 × 2.62
25.0*	31.8	5.0	26.5	0.8	2.0	WE3100250	26.64 × 2.62
28.0*	34.8	5.0	29.5	0.8	2.0	WE3100280	29.82 × 2.62
30.0	34.8	3.7	31.5	0.4	2.0	WE3000300	31.47 × 1.78
30.0	36.8	5.0	31.5	0.8	2.0	WE3100300	31.42 × 2.62
32.0*	38.8	5.0	33.5	0.8	2.0	WE3100320	34.59 × 2.62
35.0	41.8	5.0	36.5	0.8	2.0	WE3100350	36.17 × 2.62
36.0*	42.8	5.0	37.5	0.8	2.0	WE3100360	37.77 × 2.62
37.0	43.8	5.0	38.5	0.8	2.0	WE3100370	39.34 × 2.62
40.0*	46.8	5.0	41.5	0.8	2.0	WE3100400	42.52 × 2.62
42.0	48.8	5.0	43.5	0.8	2.0	WE3100420	44.12 × 2.62
45.0*	51.8	5.0	46.5	0.8	2.0	WE3100450	47.29 × 2.62
49.0	55.8	5.0	50.5	0.8	2.0	WE3100490	50.47 × 2.62
50.0*	56.8	5.0	51.5	0.8	2.0	WE3100500	52.07 × 2.62
50.8	57.6	5.0	52.3	0.8	2.0	WE3100508	52.07 × 2.62
54.0	60.8	5.0	55.5	0.8	2.0	WE3100540	55.25 × 2.62
55.0	61.8	5.0	56.5	0.8	2.0	WE3100550	56.82 × 2.62
56.0*	62.8	5.0	57.5	0.8	2.0	WE3100560	58.42 × 2.62
60.0	66.8	5.0	61.5	0.8	2.0	WE3100600	61.60 × 2.62
63.0*	69.8	5.0	64.5	0.8	2.0	WE3100630	64.77 × 2.62
65.0	73.8	6.0	66.5	1.0	3.0	WE3200650	66.27 × 3.53
70.0	78.8	6.0	71.5	1.0	3.0	WE3200700	72.62 × 3.53
75.0	83.8	6.0	76.5	1.0	3.0	WE3200750	75.79 × 3.53
80.0	88.8	6.0	81.5	1.0	3.0	WE3200800	82.14 × 3.53
85.0	93.8	6.0	86.5	1.0	3.0	WE3200850	83.52 × 3.53
90.0	98.8	6.0	91.5	1.0	3.0	WE3200900	91.67 × 3.53
95.0	103.8	6.0	96.5	1.0	3.0	WE3200950	98.02 × 3.53
100.0	108.8	6.0	101.5	1.0	3.0	WE3201000	101.19 × 3.53
105.0	113.8	6.0	106.5	1.0	3.0	WE3201050	107.54 × 3.53

*Installation in Grooves according to ISO 6195, Type D.

Installation Dimensions / TSS Part No.

Rod Diameter	Groove Diameter	Groove Width	Bore Diameter	Radius	Step Width	TSS Part No.	O-Ring Dimensions
d_N f8/h9	D_3 H9	L_3 +0.2	D_4 H11	r_1 max.	a min.		
110.0	118.8	6.0	111.5	1.0	3.0	WE3201100	110.72 × 3.53
115.0	123.8	6.0	116.5	1.0	3.0	WE3201150	117.07 × 3.53
120.0	128.8	6.0	121.5	1.0	3.0	WE3201200	120.24 × 3.53
125.0	133.8	6.0	126.5	1.0	3.0	WE3201250	126.59 × 3.53
130.0	138.8	6.0	131.5	1.0	3.0	WE3201300	132.94 × 3.53
135.0	143.8	6.0	136.5	1.0	3.0	WE3201350	136.12 × 3.53
137.0	145.8	6.0	138.5	1.0	3.0	WE3201370	139.29 × 3.53
140.0	148.8	6.0	141.5	1.0	3.0	WE3201400	142.47 × 3.53
145.0	153.8	6.0	146.5	1.0	3.0	WE3201450	145.64 × 3.53
150.0	158.8	6.0	151.5	1.0	3.0	WE3201500	151.99 × 3.53
160.0	168.8	6.0	161.5	1.0	3.0	WE3201600	158.34 × 3.53
170.0	178.8	6.0	171.5	1.0	3.0	WE3201700	171.04 × 3.53
180.0	188.8	6.0	181.5	1.0	3.0	WE3201800	177.39 × 3.53
190.0	198.8	6.0	191.5	1.0	3.0	WE3201900	190.09 × 3.53
200.0	208.8	6.0	201.5	1.0	3.0	WE3202000	202.79 × 3.53
210.0	218.8	6.0	211.5	1.0	3.0	WE3202100	209.14 × 3.53
220.0	228.8	6.0	221.5	1.0	3.0	WE3202200	221.84 × 3.53
230.0	238.8	6.0	231.5	1.0	3.0	WE3202300	228.19 × 3.53
240.0	248.8	6.0	241.5	1.0	3.0	WE3202400	240.89 × 3.53
250.0	258.8	6.0	251.5	1.0	3.0	WE3202500	253.59 × 3.53
260.0	272.2	8.4	262.0	1.5	4.0	WE3302600	253.37 × 5.33
280.0	292.2	8.4	282.0	1.5	4.0	WE3302800	278.77 × 5.33
300.0	312.2	8.4	302.0	1.5	4.0	WE3303000	304.17 × 5.33
320.0	332.2	8.4	322.0	1.5	4.0	WE3303200	329.57 × 5.33
350.0	362.2	8.4	352.0	1.5	4.0	WE3303500	354.97 × 5.33
360.0	372.2	8.4	362.0	1.5	4.0	WE3303600	354.97 × 5.33
370.0	382.2	8.4	372.0	1.5	4.0	WE3303700	365.00 × 5.30
400.0	412.2	8.4	402.0	1.5	4.0	WE3304000	405.26 × 5.33
500.0	516.0	11.0	502.0	1.5	4.0	WE3405000	494.16 × 7.00
600.0	616.0	11.0	602.0	1.5	4.0	WE3406000	608.08 × 7.00
700.0	720.0	14.0	702.5	2.0	5.0	WE3507000	705.00 × 8.40
800.0	820.0	14.0	802.5	2.0	5.0	WE3508000	805.00 × 8.40
900.0	920.0	14.0	902.5	2.0	5.0	WE3509000	905.00 × 8.40
1200.0	1220.0	14.0	1202.5	2.0	5.0	WE35X1200	1205.0 × 8.40
1800.0	1820.0	14.0	1802.5	2.0	5.0	WE35X1800	1805.0 × 8.40
2600.0	2620.0	14.0	2602.5	2.0	5.0	WE35X2600	2605.0 × 8.40

Scraper DA17



Double-Acting

Materials : Rubber

DA 17

개요

DA 17 형식의 Dust Wiper는 내마모성이 우수한 합성 고무로 되어있어, Scraper 역할뿐만 아니라 2차 Seal-ing 역할까지 가능하며 특히, 1차 Sealing을 통과한 유체를 실린더 내부로 되돌리는데 효과가 크다.

Wiper Sealing은 유압 실린더 등이 왕복운동을 할 때, 피스톤 로드와 플랜저 부분에 장착하여 사용된다.

유압 시스템이 작동 중에 오염 물질이 유입되면 Seal, Wear Ring 등에 치명적인 손상을 주게 되어, 내구성에 영향을 준다.

DA 17을 사용함으로써, 이 같은 문제를 방지할 수 있다.

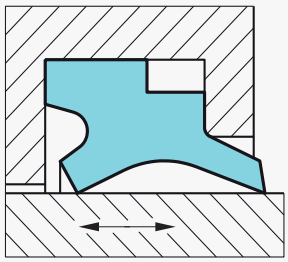

Scraper DA 17

특징

DA 17 Wiper는 기하학적으로 다른 두 개의 부드러운 Sealing Lip으로 설계되어 있다. Wiper Lip은 먼지를 닦아내는 동시에, 로드에 오일 유막이 잔존해 있지 않도록 설계되어 있다.

이와 같은 것은 입자, 먼지, 물 등을 제거하는 반경 장력의 장점을 갖고 있다. 압착이 되었을 때, 안쪽 Lip은 밀폐 기능 역할을 한다.

Double Wiper DA 17은 왕복 운동이 적용되는 로드와 플랜저에서 매우 유용하게 사용된다.

장점

- 접착성 먼지 등이 있는 장소에서 우수한 효과를 나타낸다.
- 형상이 단순하다.
- 특별한 기구 없이 분해 및 조립이 용이하다.
- 가공 홈을 단순하게 설계할 수 있다.
- 가벼운 회전 및 상하 운동으로 작동에 영향을 받지 않는다.
- 내마모성이 우수하다.

적용 범위

- 속도 : 최대 1 m/s
- 온도 : −30 ℃ ~ +110 ℃
- 매체 : 오일,
  공기,
  물속의 오일 에멀젼.

※ 주의사항

- 위에 제시된 최대 수치는 같은 동작 시간대에 동시에 유효할 수는 없다.
- 최대 속도는 재질, 타입, 압력, 온도, 틈새 크기에 따라 좌우된다.
- 온도 범위 또한, 매체 조건에 따라 영향을 받는다.

재질

- **표준 재질 (Standard Material) :**

  NBR, 90 Shore A

Installation Recommendation

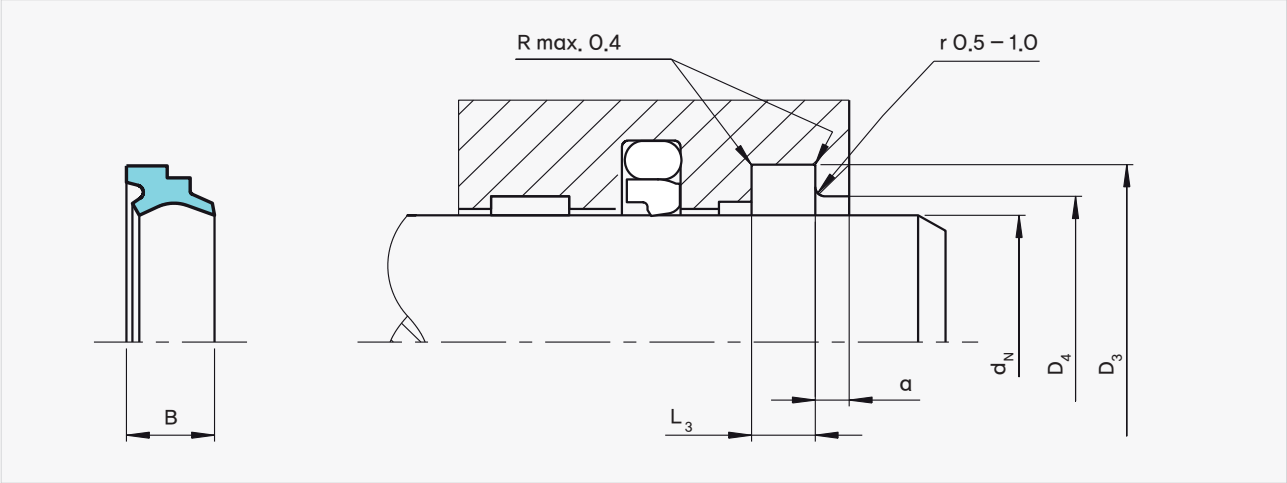

Installation drawing

주문 예

Scraper DA 17

- **Rod diameter :** d_N = 50.0mm
- **TSS Part No.** WD1700500
- **Material :** Standard material NBR, 90 Shore A
- **Material Code :** N9

TSS Article No. WD17 0 0500 – N9

- TSS Series No.
- Type (Standard)
- Rod diameter x 10
- Quality Index
- Material Code

DA 17

Installation Dimensions / TSS Part No.

Rod Diameter	Groove Diameter	Groove Width	Bore Diameter	Step Width	Width	TSS Part No.
d_N f8/h9	D_3 H9	L_3 +0.2	D_4 H11	a min.	B	
10.0	**18.0**	**6.0**	**13.5**	**2.0**	**8.0**	**WD1700100**
12.0	**20.0**	**6.0**	**15.5**	**2.0**	**8.0**	**WD1700120**
14.0	**22.0**	**6.0**	**17.5**	**2.0**	**8.0**	**WD1700140**
15.0	23.0	6.0	18.5	2.0	8.0	WD1700150
16.0	**24.0**	**6.0**	**19.5**	**2.0**	**8.0**	**WD1700160**
18.0	**26.0**	**6.0**	**21.5**	**2.0**	**8.0**	**WD1700180**
20.0	**28.0**	**6.0**	**23.5**	**2.0**	**8.0**	**WD1700200**
22.0	**30.0**	**6.0**	**25.5**	**2.0**	**8.0**	**WD1700220**
24.0	32.0	6.0	27.5	2.0	8.0	WD1700240
25.0	**33.0**	**6.0**	**28.5**	**2.0**	**8.0**	**WD1700250**
28.0	**36.0**	**6.0**	**31.5**	**2.0**	**8.0**	**WD1700280**
30.0	38.0	6.0	33.5	2.0	8.0	WD1700300
32.0	**40.0**	**6.0**	**35.5**	**2.0**	**8.0**	**WD1700320**
35.0	43.0	6.0	38.5	2.0	8.0	WD1700350
36.0	44.0	6.0	39.5	2.0	8.0	WD1700360
37.0	45.0	6.0	40.5	2.0	8.0	WD1700370
38.0	46.0	6.0	41.5	2.0	8.0	WD1700380
40.0	**48.0**	**6.0**	**43.5**	**2.0**	**8.0**	**WD1700400**
42.0	50.0	6.0	45.5	2.0	8.0	WD1700420
45.0	**53.0**	**6.0**	**48.5**	**2.0**	**8.0**	**WD1700450**
46.0	54.0	6.0	49.5	2.0	8.0	WD1700460
48.0	56.0	6.0	51.5	2.0	8.0	WD1700480
50.0	**58.0**	**6.0**	**53.5**	**2.0**	**8.0**	**WD1700500**
52.0	60.0	6.0	55.5	2.0	8.0	WD1700520
55.0	63.0	6.0	58.5	2.0	8.0	WD1700550
56.0	**64.0**	**6.0**	**59.5**	**2.0**	**8.0**	**WD1700560**
60.0	68.0	6.0	63.5	2.0	8.0	WD1700600
63.0	**71.0**	**6.0**	**66.5**	**2.0**	**8.0**	**WD1700630**
65.0	73.0	6.0	68.5	2.0	8.0	WD1700650
68.0	76.0	6.0	71.5	2.0	8.0	WD1700680
70.0	**78.0**	**6.0**	**73.5**	**2.0**	**8.0**	**WD1700700**
75.0	83.0	6.0	78.5	2.0	8.0	WD1700750
80.0	**88.0**	**6.0**	**83.5**	**2.0**	**8.0**	**WD1700800**
85.0	93.0	6.0	88.5	2.0	8.0	WD1700850
90.0	**98.0**	**6.0**	**93.5**	**2.0**	**8.0**	**WD1700900**
95.0	103.0	6.0	98.5	2.0	8.0	WD1700950
100.0	**108.0**	**6.0**	**103.5**	**2.0**	**8.0**	**WD1701000**
105.0	117.0	8.2	110.0	3.0	11.0	WD1701050
110.0	**122.0**	**8.2**	**115.0**	**3.0**	**11.0**	**WD1701100**

The Rod diameters in **bold** type comply with the recommendations of ISO 3320.
Intermediate sizes above 125mm diameter can also be supplied in impact vulcanised form.
Other dimensions on request. Up to 18mm diameters, we recommend a Split Groove.

Installation Dimensions / TSS Part No.

Rod Diameter	Groove Diameter	Groove Width	Bore Diameter	Step Width	Width	TSS Part No.
d_N f8/h9	D_3 H9	L_3 +0.2	D_4 H11	a min.	B	
115.0	127.0	8.2	120.0	3.0	11.0	WD1701150
120.0	132.0	8.2	125.0	3.0	11.0	WD1701200
125.0	**137.0**	**8.2**	**130.0**	**3.0**	**11.0**	**WD1701250**
130.0	142.0	8.2	135.0	3.0	11.0	WD1701300
135.0	147.0	8.2	140.0	3.0	11.0	WD1701350
140.0	**152.0**	**8.2**	**145.0**	**3.0**	**11.0**	**WD1701400**
145.0	157.0	8.2	150.0	3.0	11.0	WD1701450
150.0	162.0	8.2	155.0	3.0	11.0	WD1701500
155.0	167.0	8.2	160.0	3.0	11.0	WD1701550
160.0	**172.0**	**8.2**	**165.0**	**3.0**	**11.0**	**WD1701600**
165.0	177.0	8.2	170.0	3.0	11.0	WD1701650
170.0	182.0	8.2	175.0	3.0	11.0	WD1701700
180.0	**192.0**	**8.2**	**185.0**	**3.0**	**11.0**	**WD1701800**
185.0	197.0	8.2	190.0	3.0	11.0	WD1701850
190.0	202.0	8.2	195.0	3.0	11.0	WD1701900
195.0	207.0	8.2	200.0	3.0	11.0	WD1701950
200.0	**212.0**	**8.2**	**205.0**	**3.0**	**11.0**	**WD1702000**
205.0	220.0	9.5	212.0	3.0	13.0	WD1702050
210.0	225.0	9.5	217.0	3.0	13.0	WD1702100
220.0	**235.0**	**9.5**	**227.0**	**3.0**	**13.0**	**WD1702200**
225.0	240.0	9.5	232.0	3.0	13.0	WD1702250
240.0	255.0	9.5	247.0	3.0	13.0	WD1702400
250.0	**265.0**	**9.5**	**257.0**	**3.0**	**13.0**	**WD1702500**
260.0	275.0	9.5	267.0	3.0	13.0	WD1702600
275.0	290.0	9.5	282.0	3.0	13.0	WD1702750
280.0	**295.0**	**9.5**	**287.0**	**3.0**	**13.0**	**WD1702800**
290.0	305.0	9.5	297.0	3.0	13.0	WD1702900
300.0	315.0	9.5	307.0	3.0	13.0	WD1703000
310.0	325.0	9.5	317.0	3.0	13.0	WD1703100
320.0	**335.0**	**9.5**	**327.0**	**3.0**	**13.0**	**WD1703200**
350.0	365.0	9.5	357.0	3.0	13.0	WD1703500
360.0	**375.0**	**9.5**	**367.0**	**3.0**	**13.0**	**WD1703600**
370.0	385.0	9.5	377.0	3.0	13.0	WD1703700
400.0	415.0	9.5	407.0	3.0	13.0	WD1704000
440.0	455.0	9.5	447.0	3.0	13.0	WD1704400

The Rod diameters in **bold** type comply with the recommendations of ISO 3320.
Intermediate sizes above 125mm diameter can also be supplied in impact vulcanised form.
Other dimensions on request. Up to 18mm diameters, we recommend a Split Groove.

Zurcon® Scraper DA 22



Double-Acting

Materials: Zurcon®

개요

Scraper DA 22는 밀폐형 Groove (ISO 6195 housing)에 조립되는 폴리우레탄 소재의 복동형 Wiper이다.

Scraper Lip은 외부 머리와 남은 Oil Film을 효과적으로 스크래핑 하도록 디자인되었다.

안쪽으로 향한 Scraping Lip은 저압에서도 Sealing 역할을 수행한다.

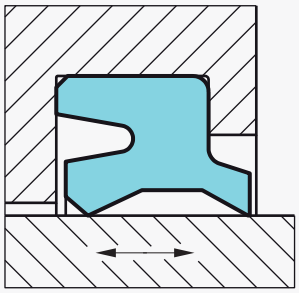

Scraper DA 22

재질

표준 재질 (Standard Material) :

Standard Application

- Zurcon® Polyurethane : 92 Shore A
- Material Code : Z201
- Colour : Turquoise

장점

- 뛰어난 Scraping 효과.
- 내마모성.
- 내구성.

적용 분야

- ISO 표준 실린더
- 유압 범용 실린더
- 농기계 분야

적용 범위

- Scraper Side 압력 : Atmospheric Pressure.
  Seal Side 압력 : 최대 2 MPa (20 bar)
  A relief bore must be provided with higher pressures.
- 속도 : 최대 1 m/s
- 온도 : −35 ℃ ~ +100 ℃
- 매체 : 미네랄 오일 & 그리스.
- Groove Type : 밀폐형.

※ 주의사항

- 위에 제시된 최대 수치는 같은 동작 시간대에 동시에 유효할 수는 없다.
- 최대 속도는 재질, 타입, 압력, 온도, 틈새 크기에 따라 좌우된다.
- 온도 범위 또한, 매체 조건에 따라 영향을 받는다.

DA 22

Installation Recommendation

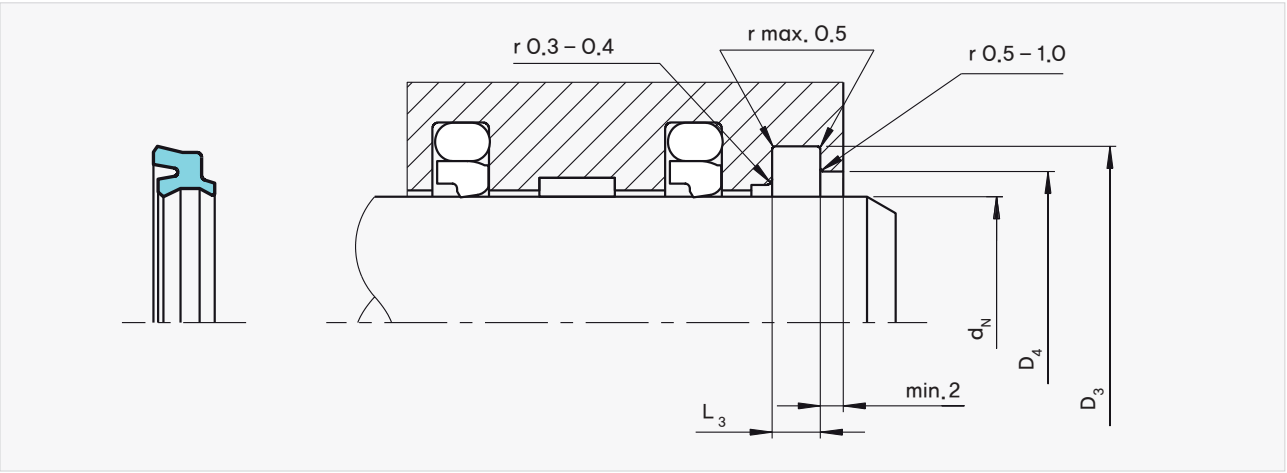

Installation drawing

주문 예

Scraper DA 22

- Rod diameter : d_N = 36.0mm
- Groove diameter : D_3 = 44.0mm

- TSS Part No. WD2200360
- Material Code : Z201

TSS Article No. WD22 0 0360 – Z201
TSS Series No.
Type (Standard)
Rod diameter x 10
Quality Index
Material Code

Installation Dimensions / TSS Part No.

Rod Diameter	Groove Diameter	Groove Width	Bore Diameter	TSS Part No.
d_N f8/h9	D_3 H9	L_3 +0.1	D_4 H11	
5.0	10.0	3.5	7.5	WD2200050
8.0	13.0	3.5	10.5	WD2200080
10.0	16.0	4.0	12.5	WD2200100
12.0	**18.0**	**4.0**	**14.5**	**WD2200120**
12.0	18.6	3.8	15.0	WD2210120
14.0	**20.0**	**4.0**	**16.5**	**WD2200140**
14.0	20.6	3.8	17.0	WD2210140
16.0	22.0	4.0	18.5	WD2200160
18.0	**24.0**	**4.0**	**20.5**	**WD2200180**
18.0	24.6	3.8	21.0	WD2210180
20.0	26.0	4.0	22.5	WD2200200
20.0	28.6	5.3	23.0	WD2210200
22.0	**28.0**	**4.0**	**24.5**	**WD2200220**
22.0	30.6	5.3	25.0	WD2210220
24.0	32.6	5.3	27.0	WD2210240
25.0	31.0	4.0	27.5	WD2200250
25.0	33.6	5.3	28.0	WD2210250
28.0	**36.0**	**5.0**	**31.0**	**WD2200280**
28.0	36.6	5.3	31.0	WD2210280
30.0	38.0	5.0	33.0	WD2200300
30.0	38.6	5.3	33.0	WD2210300
32.0	40.0	5.0	35.0	WD2200320
32.0	40.6	5.3	35.0	WD2210320
35.0	43.0	5.0	38.0	WD2200350
35.0	43.6	5.3	38.0	WD2210350
36.0	**44.0**	**5.0**	**39.0**	**WD2200360**
36.0	44.6	5.3	39.0	WD2210360
40.0	48.0	5.0	43.0	WD2200400
40.0	48.6	5.3	43.0	WD2210400
45.0	**53.0**	**5.0**	**48.0**	**WD2200450**
45.0	53.6	5.3	48.0	WD2210450
50.0	58.0	5.0	53.0	WD2200500
50.0	58.6	5.3	53.0	WD2210500
55.0	63.6	5.3	58.0	WD2210550
55.0	65.0	6.0	58.0	WD2200550
56.0	64.6	5.3	59.0	WD2210560

The sizes in **bold** type comply with ISO 6195. Installation Groove Type C. Up to 18mm diameter we recommend a Split Groove. Other sizes on request.

DA 22

Installation Dimensions / TSS Part No.

Rod Diameter	Groove Diameter	Groove Width	Bore Diameter	TSS Part No.
d_N f8/h9	D_3 H9	L_3 +0.1	D_4 H11	
56.0	**66.0**	**6.0**	**59.0**	**WD2200560**
58.0	68.0	6.0	61.0	WD2200580
60.0	68.6	5.3	63.0	WD2210600
60.0	70.0	6.0	63.0	WD2200600
63.0	71.6	5.3	66.0	WD2210630
63.0	73.0	6.0	66.0	WD2200630
65.0	73.6	5.3	68.0	WD2210650
65.0	75.0	6.0	68.0	WD2200650
70.0	78.6	5.3	73.0	WD2210700
70.0	**80.0**	**6.0**	**73.0**	**WD2200700**
75.0	83.6	5.3	78.0	WD2210750
75.0	85.0	6.0	78.0	WD2200750
78.0	88.0	6.0	81.0	WD2200780
80.0	88.6	5.3	83.0	WD2210800
80.0	90.0	6.0	83.0	WD2200800
85.0	95.0	6.0	88.0	WD2200850
85.0	97.2	7.1	91.0	WD2210850
90.0	**100.0**	**6.0**	**93.0**	**WD2200900**
90.0	102.2	7.1	96.0	WD2210900
100.0	110.0	6.0	103.0	WD2201000
100.0	112.2	7.1	106.0	WD2211000
110.0	122.2	7.1	116.6	WD2211100
110.0	**125.0**	**8.5**	**114.0**	**WD2201100**
120.0	135.0	8.5	124.0	WD2201200
125.0	140.0	8.5	129.0	WD2201250
140.0	**155.0**	**8.5**	**144.0**	**WD2201400**
150.0	165.0	8.5	154.0	WD2201500
160.0	175.0	8.5	164.0	WD2201600
180.0	195.0	8.5	184.0	WD2201800

The sizes in **bold** type comply with ISO 6195. Installation Groove Type C.
Up to 18mm diameter we recommend a Split Groove.
Other sizes on request.

Scraper WSA



Single-Acting with Metal Case
For Open Groove Assembly

Materials: NBR & Metal

WSA

개요

Scraper WSA는 메탈 케이스 내부에 유황 처리된 형상화되어 있는 고무를 이용한 한 방향 Scraper이다.

Scraper WSA는 개방되어 있는 홈에 억지 끼워 맞춤식으로 조립하여 사용된다. Scraper WSA는 외경이 홈 경보다 약간 크게 되어 있으나, 홈에 의해서 정확한 자리를 잡게 된다.

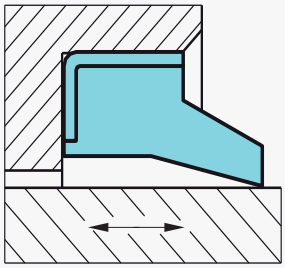

Scraper WSA

재질

Standard Material

- Material : NBR, 90 Shore A + Metal
- Material Code : N9MN

장점

- 단순한 홈 가공.
- 견고한 조립에 의한 견고한 조립.
- 손쉬운 조립.
- 저비용.

적용 분야

- 유압 실린더
- 농기계
- 건설 장비
- 리프트 트럭
- 모바일 유압 장치

적용 범위

- 속도 : 최대 1 m/s
- 온도 : −30℃ ~ +110℃
- 매체 : 오일,
  공기,
  물속의 오일 에멀젼.
- Groove type : Open.

※ 주의사항

- 위에 제시된 최대 수치는 같은 동작 시간대에 동시에 유효할 수는 없다.
- 최대 속도는 재질, 타입, 압력, 온도, 틈새 크기에 따라 좌우된다.
- 온도 범위 또한, 매체 조건에 따라 영향을 받는다.

Installation Recommendation

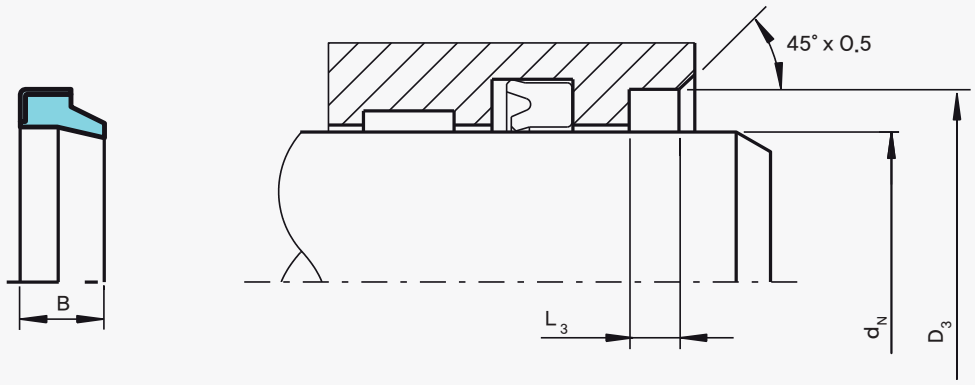

Installation drawing

주문 예

Scraper DA 22

- Rod diameter : d_N = 35mm
- Groove diameter : D_3 = 45mm
- TSS Part No. WSA000350
- Material Set-Code : N9MN

TSS Article No. WSA0 0 0350 – N9MN

- WSA0 — TSS Series No.
- 0 — Type (Standard)
- 0350 — Rod diameter x 10
- N — Quality Index (See table)
- 9MN — Material Set-Code

Installation Dimensions / TSS Part No.

Rod Diameter	Groove Diameter	Groove Width	Width	TSS Part No.
d_N h9	D_3 H8	L_3 +0.1	B	
6.0	**13.0**	**3.0**	**4.5**	**WSA000060**
10.0	**16.0**	**3.0**	**4.5**	**WSA000100**
10.0	**18.0**	**5.0**	**7.0**	**WSA100100**
12.0	**20.0**	**4.0**	**6.0**	**WSA000120**
12.0	**22.0**	**5.0**	**8.0**	**WSA100120**
13.0	18.0	3.0	4.5	WSA000130
14.0	**22.0**	**3.0**	**4.0**	**WSA000140**
16.0	**22.0**	**3.0**	**4.0**	**WSA000160**
16.0	**26.0**	**5.0**	**8.0**	**WSA200160**
18.0	**26.0**	**5.0**	**7.0**	**WSA000180**
18.0	**28.0**	**7.0**	**10.0**	**WSA100180**
20.0	26.0	4.0	7.0	WSA000200
20.0	**28.0**	**3.5**	**5.0**	**WSA200200**
20.0	**28.0**	**5.0**	**8.0**	**WSA300200**
20.0	**30.0**	**4.0**	**6.0**	**WSA400200**
20.0	**30.0**	**5.0**	**7.0**	**WSA500200**
20.0	**30.0**	**7.0**	**10.0**	**WSA600200**
22.0	**28.0**	**5.0**	**9.0**	**WSA000220**
22.0	**32.0**	**7.0**	**10.0**	**WSA100220**
24.0	35.0	5.0	8.0	WSA000240
25.0	**35.0**	**5.0**	**7.0**	**WSA000250**
25.0	**35.0**	**7.0**	**10.0**	**WSA100250**
28.0	**38.0**	**5.0**	**8.0**	**WSA000280**
28.0	**40.0**	**7.0**	**10.0**	**WSA100280**
30.0	40.0	5.0	8.0	WSA000300
30.0	40.0	7.0	10.0	WSA100300
30.0	45.0	5.0	8.0	WSA200300
32.0	**42.0**	**5.0**	**7.0**	**WSA000320**
32.0	**45.0**	**4.0**	**8.0**	**WSA100320**
32.0	**45.0**	**7.0**	**10.0**	**WSA200320**
35.0	45.0	7.0	10.0	WSA000350
36.0	**45.0**	**7.0**	**10.0**	**WSA000360**
38.0	48.0	7.0	10.0	WSA000380
40.0	**50.0**	**5.0**	**7.0**	**WSA000400**
40.0	**50.0**	**5.0**	**8.0**	**WSA100400**
40.0	**50.0**	**7.0**	**10.0**	**WSA200400**
42.0	52.0	7.0	10.0	WSA000420
45.0	**55.0**	**7.0**	**10.0**	**WSA000450**
50.0	56.0	5.0	7.0	WSA000500
50.0	60.0	5.0	7.0	WSA200500
50.0	60.0	7.0	10.0	WSA300500
50.0	65.0	7.0	10.0	WSA400500

The sizes in **bold** type comply with ISO 6195, installation Groove Type B.
Other sizes on request.
The listed products are technically equivalent, but availability and pricing may vary.

Installation Dimensions / TSS Part No.

Rod Diameter	Groove Diameter	Groove Width	Width	TSS Part No.
d_N h9	D_3 H8	L_3 +0.1	B	
52.0	62.0	7.0	10.0	WSA000520
55.0	63.0	7.0	10.0	WSA000550
55.0	65.0	7.0	10.0	WSA100550
56.0	**66.0**	**7.0**	**10.0**	**WSA000560**
60.0	70.0	7.0	10.0	WSA000600
60.0	74.0	5.0	8.0	WSA100600
63.0	**75.0**	**7.0**	**10.0**	**WSA000630**
65.0	75.0	7.0	10.0	WSA000650
70.0	**80.0**	**7.0**	**10.0**	**WSA000700**
75.0	85.0	7.0	10.0	WSA000750
80.0	**90.0**	**7.0**	**10.0**	**WSA000800**
85.0	95.0	7.0	10.0	WSA000850
90.0	**100.0**	**7.0**	**10.0**	**WSA000900**
95.0	105.0	7.0	10.0	WSA000950
100.0	**110.0**	**7.0**	**10.0**	**WSA001000**
105.0	115.0	7.0	10.0	WSA001050
110.0	**120.0**	**7.0**	**10.0**	**WSA001100**
115.0	125.0	7.0	10.0	WSA001150
120.0	130.0	7.0	10.0	WSA001200
120.0	135.0	7.0	10.0	WSA101200
125.0	**140.0**	**9.0**	**12.0**	**WSA001250**
130.0	145.0	9.0	12.0	WSA001300
140.0	**155.0**	**9.0**	**12.0**	**WSA001400**
150.0	165.0	9.0	12.0	WSA001500
160.0	**175.0**	**9.0**	**12.0**	**WSA001600**
170.0	185.0	10.0	14.0	WSA001700
180.0	**195.0**	**10.0**	**14.0**	**WSA001800**
200.0	**220.0**	**12.0**	**16.0**	**WSA002000**
220.0	**235.0**	**10.0**	**14.0**	**WSA002200**
270.0	295.0	12.0	16.0	WSA002700

The sizes in **bold** type comply with ISO 6195. installation Groove Type B.
Other sizes on request.
The listed products are technically equivalent, but availability and pricing may vary.