

POWER SUPPLY UNIT

POWER SUPPLY UNIT



SA-132/250/520/960

MODEL	INPUT	OUTPUT	SIZE(mm)	TRANSFORMER
SA-132	AC220V 1PH 60Hz	DC24V 5.5A	W163 x H225 x D130	interior
SA-250	AC440V 3PH 60Hz	DC24V 10A	W180 x H250 x D170	interior
SA-520	AC440V 3PH 60Hz	DC24V 20A	W180 x H300 x D180	interior
SA-960	AC220V 3PH 60Hz	DC24V 40A	W204 x H310 x D160	exterior

SCHEMATIC DIAGRAM

SA-132

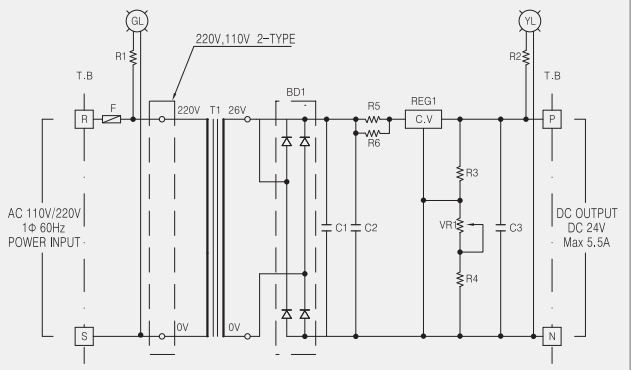

SA-250

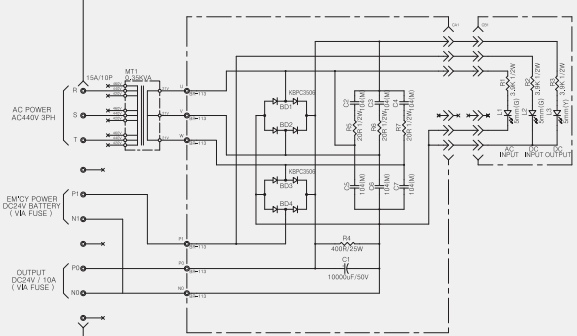

SA-520

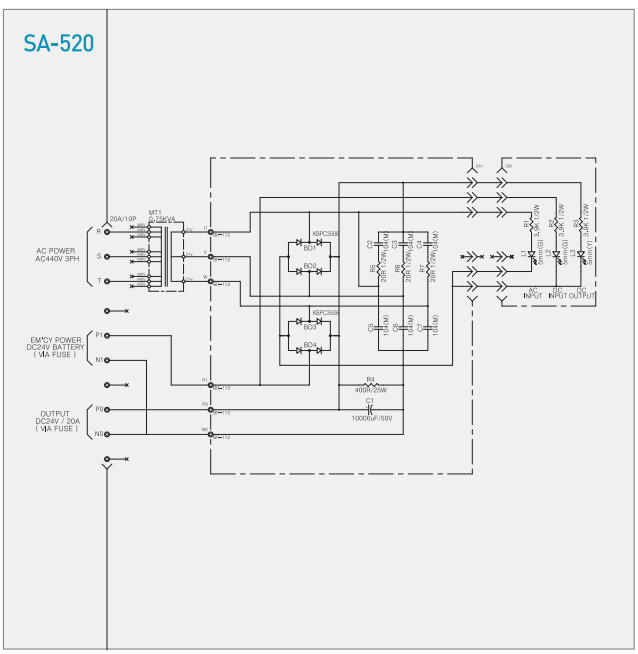

SA-960

