DC-DC CONVERTER

MODEL DSC DC-DC CONVERTER

Dong-Suh Control Co.,Ltd.



PRODUCTS RANGE

Nominal Input Voltage (V dc)	Peak Power Rating (W)	Output Voltage (V dc)
24/36/48	300	12.5 or 13.5
72/80	300	12.5 or 13.5

DESCRIPTION

The DSC DC-DC converters are designed and manufactured to the exacting requirements of most of electric powered vehicles. * Peak power rating and the continuous power rating is affected by the installation and the ambient temperature.

DIMENSIONS mm

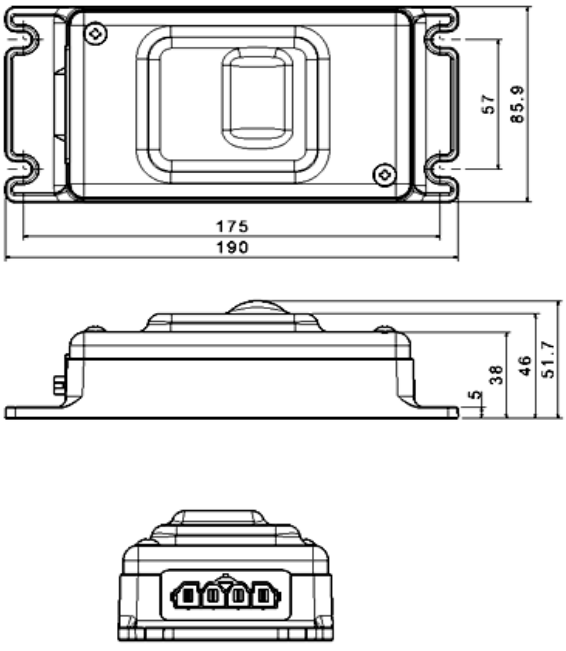

APPLICATION

The DSC DC-DC converters are used for electrical vehicle converted from DC 24, 36, 48, 72 and 80 volts of battery to DC12.5 and DC13.5 volts and it can be used for lamps and accessories.

FEATURES

- Compact design
- Metal cover used
- High efficiency
- 300Watts : Molex 4 pins Mini-Fit Senior
  * 5 pins connector for the enable function is available
- Fully isolated
- IP65 protection rating
- Vibration : 6G, 0 to 200 Hz, 1 hour in x, y and z axis
- Operating Temperature : -30℃ to +55℃
- Storage Temperature : -40℃ to +70℃
- UL approved product available

300W

www.dscontrol.co.kr

Note: As all contents in this catalogue is the typical information, it is subject to change without notice for product improvement and it could be different depending on the products.