구 분	케이싱 (Casing)	임펠러 (Impeller)	주축 (Shaft)	축봉장치 (Sealing)
기본재질 (Standard)	GC200	GC200	STS304	Mechanical Seal
옵션재질 (Option)	SSC13, SSC14, GCD450	BC6, SSC13, SSC14	STS316	

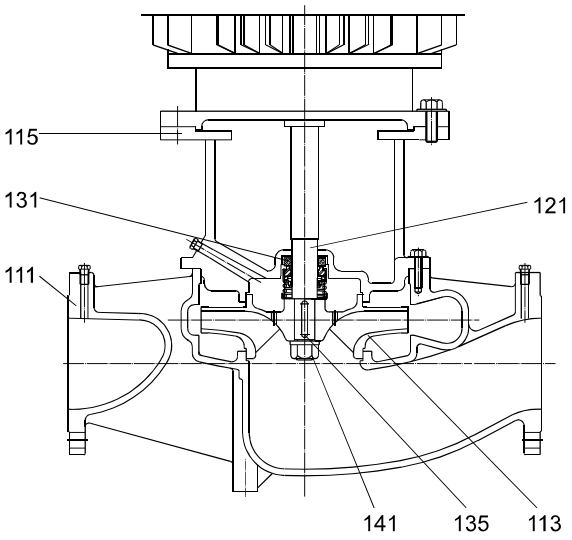

Item NO	Part Name	Material
111	Casing	GC200
113	Impeller	GC200
115	Motor Bracket	GC200
121	Shaft	STS304
131	Mechanical Seal	SIC/CARBON
135	Impeller Key	STS304
141	Hexagon Nut	STS304



