Loudspeaker Specification Sheet

Model Number : 15BM304

Revision : Rev 00.
Date : 28.JUN.17

Features:

- Driver Type : ME Series (Music Enhancement)
- Size : 380mm (15inch)
- Magnet : Ferrite
- Frame : Steel
- Diaphragm : Papar



Specifications:

- Rated Power Handling : 300W (RMS)
- Characteristic Sensitivity : 93.0dB ± 2dB (1W/1m)
- Nominal Impedance : 4Ω
- Free Air Resonance Frequency, fs : 43Hz ± 20%
- Frequency Range : fs ~ 2.5kHz ± 20%
- Voice Coil Inner Diameter : Ø65.7 (mm)
- Net Weight : 5000g (176oz)

Dimensions & Mounting Information:

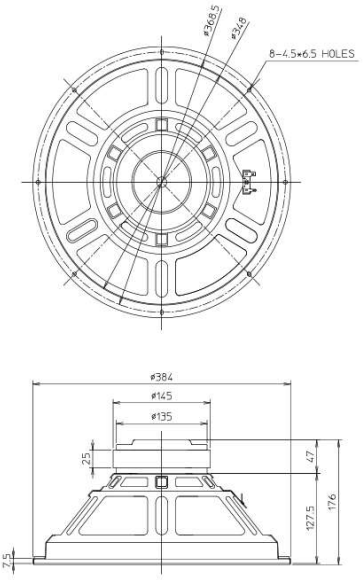

Frequency & Impedance Response:

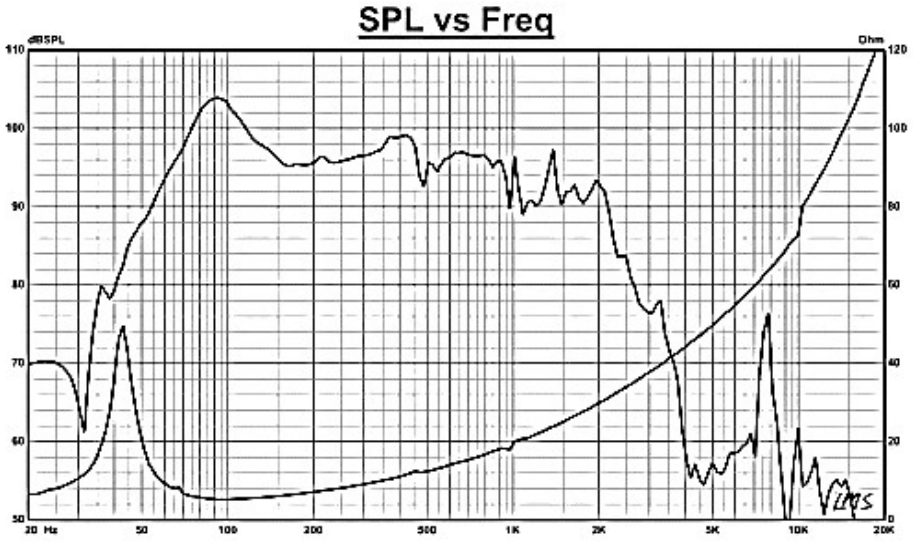

http://www.bhacoustic.com
105, Sinwon-ro, Yeongtong-gu, Suwon-si, Gyeonggi-do, Republic of Korea 16678
Tel : +82(31)-206-5477 Fax : +82-(21)-206-5473