Communal Aerial System

Inter-communication Entertainment System for TV and Radio Broadcasting (MAD-100)



- COMMUNAL AERIAL SYSTEM (CAS).

MAD-100 system is a maritime antenna system specially designed for vessels, and includes a broadband amplifier that can amplifies and distributes signals from all band radio broadcasting in MF/HF/SW and FM, TV broadcasting in VHF/UHF, and VTR/SATELLITE TV/ CCTV signal interface.

It uses an Omni-directional antenna that can receive stable propagation signal during sailing for TV, and AM /FM radio signal. It has a built in broadband amplifier with AGC (Automatic Gain Control) to prevent the degradation of output when signal is weak.

In addition, it is maintenance free after installation due to the robust design. After installation, once power is 'ON', all functions are fully operational automatically.

The Communal Aerial System is tested according to IEC60945 and certified for CE by DNV.





- General Description

-1. Minimum reception level of TV (Standard) : 60dB
-2. Minimum reception level of radio (Standard) : 40dB
-3. Maximum Out-Let Box per a system : 96EA
-4. Maximum Out-Let Box per a line : DB-2/3/4/8
-5. Impedance of Terminal Resistor : 75 ohm

- Components

1) Main amplifier (MAD-100): maximum subscriber (96EA), Included AGC and power supply for MF/SW/FM/VHF/UHF
2) Sub amplifier (MAD-100A): additional subscriber (96EA), Included AGC and power supply for MF/SW/FM/VHF/UHF
3) VTR Amplifier (UP-40B, Option)
4) Omni-Directional Antenna (AT-100): For AM/FM, TV
5) Distributor
6) Terminal for radio and TV
7) Radio/TV, telephone and AC-220 RP terminal
8) Radio/TV cord set
9) Installation materials: End Resister (75 Ohms and connector)
10) Spare parts: Manufacturer standard

- Specification for amplifier

- MF/SW/FM/VHF/UHF Amplifier Unit (MAD-100, MAD-100A)
-1. Freq. : MF/SW (150 kHz - 30MHz), Min. 20dB
: VHF.L (45MHz - 110MHz), Min. 20dB
: VHF.H (170MHz - 225MHz), Min. 20dB
: UHF (470MHz - 850MHz), Min. 20dB
-2. AGC : 0 - 37dB
-3. Gain Deviation: MF/SW (0.8dB), VHF (1.0dB), UHF (2.0dB)
-4. Noise Figure: MF/SW (7dB), VHF (8dB), UHF (8dB)
-5. Maximum Output: MF/SW (85dB), FM/VHF/UHF (110dB)
-6. Power Consumption : DC-12V, 380mA, Max. 45VA
: AC-220V, 20mA, Max. 50VA
-7. Weight : Approx. 6.8Kg
-8. Temperature : -20℃ ~ +40℃
-9. In/Out Impedance : 75 ohm

- Power Supply (inside Main Unit)

-1. Power Source : AC110/220V, 1-ph, 50/60Hz
-2. Output Power : DC-12V, 1.2A
-3. Fuse : 250V, 1A

ISO 9001 & OHSAS 18001 Certified, for more information, visit www.mrckorea.com

MRC www.mrckorea.com CE DNV·GL

This document contains proprietary information and may not be copied, reproduced, or utilized in anyway, in all or in part without written permission from Marine Radio Co., Ltd. Copyright © 2014 Marine Radio Co., Ltd. All rights reserved.

Communal Aerial System (MAD-100)

Inter-communication Entertainment System for TV and Radio Broadcasting (MAD-100)

- Omni-Directional Antenna (AT-100)

-1. Frequency Range	: 0.1MHz ~ 850MHz
-2. Rx Pattern & Polarization	: Omni-Directional Type
-3. Gain	: 20dB ± 3dB
-4. Automatic Gain Control	: 0 ~ 25dB
-5. Output Impedance	: 75 ohm
-6. Maximum Output Level	: 110dB
-7. Power Consumption	: 120mA
-8. Input Voltage	: DC-12V
-9. Stand Rate for Wind	: Max. 60m/s
-10. Operation Temperature	: -40℃ ~ +50℃
-11. Weight	: Approx 6Kg

- VTR Amplifier (UP-40B, Option)

-1. Frequency Gain	: VHF.L (45MHz - 110MHz), Min. 30dB
	: VHF.H (170MHz - 225MHz), Min. 30dB
	: UHF (470MHz - 750MHz), Min. 30dB
-2. Gain Deviation	: VHF (1.0dB), UHF (2.0dB)
-3. Noise Figure	: VHF (8dB), UHF (8dB)
-4. Maximum Output	: FM/VHF/UHF (105dB)
-5. Power Consumption	: AC110/220V, 50mA, Ma x. 11VA
-6. Weight	: Approx. 1.7Kg
-7. Color	: Black
-8. Temperature	: -20℃ ~ +40℃
-9. In/Out Impedance	: 75 ohm

- Single Amplifier at Single Rack Type Wiring Diagram

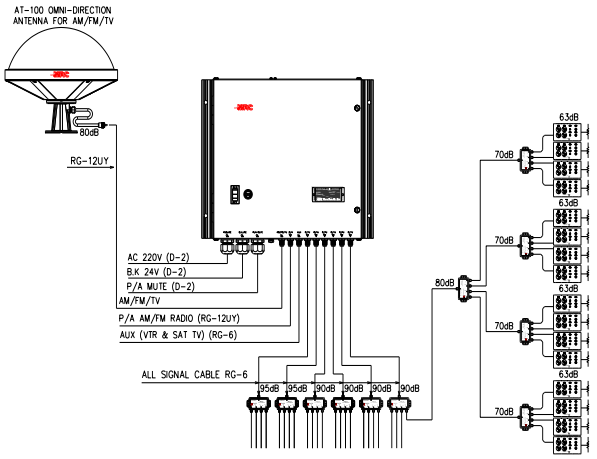

Connection Diagram of the System,

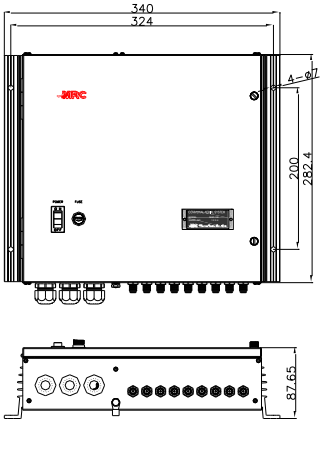

MAD-100 Main Amplifier,

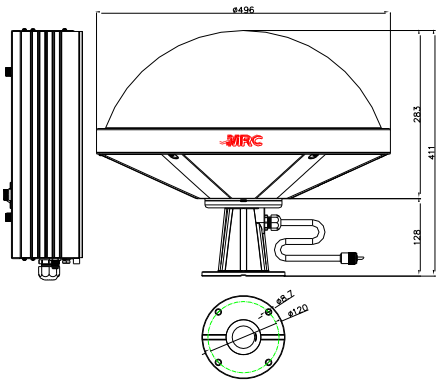

AT-100 AM/TV/FM Antenna

Agent of MRC

Headquarters

MRC (Marine Radio Co., Ltd.)

1. Address: 6-19, Namhangseo-ro, Yeongdo-gu, Busan, Korea
2. Tel: +82-51-414-7891~7
3. Fax: +82-51-413-2604
4. Zip Code: 606-033
5. Homepage: www.mrckorea.com,
6. E-Mail: verygood@mrckorea.com

ISO 9001 & OHSAS 18001 Certified, for more information, visit www.mrckorea.com

This document contains proprietary information and may not be copied, reproduced, or utilized in anyway, in all or in part without written permission from Marine Radio Co., Ltd. Copyright © 2014 Marine Radio Co., Ltd. All rights reserved.