Copyright 2020. HITROL CO., LTD all rights reserved.

ORIFICE

HOP / HOR / HOF / HRO Series



ISO 9001 ISO 14001 ASME

www.hitrol.com

Always The Best Solution

HITROL CO., LTD.

Orifice Plate
Model : HOP

Overview

Even though the orifice plate has a disadvantage of permitting a greater pressure loss than other differential pressure type flow meter such as flow nozzle and venturi tube, etc., the orifice plate is popularly used for flow measurement due to high reliability, low cost, easy manufacturing and simple shape.
As for bore type of orifice plate, there are Concentric, Eccentric, Segmental and Quadrant Edged types, and sizing calculation and design for the orifice plate are based on the standard codes of ISO-5167, ASME MFC-3M within a tolerance in compliance with these ISO & ASME Standards.

Concentric Bore Type

Concentric bore type is a traditional and universal type with sharp edge, one side of the bore beveled with 45° angle and it also has a simple structure. This type of orifice plate can be easily mounted and dismounted. Pressure taps for differential pressure measurement can be considered among flange tap, radius tap, pipe tap, vena contracta tap and corner tap by its characteristic.

Eccentric Bore Type

Eccentric bore type is generally used to prevent stay of solid materials in the pipe line and it is useful to measure flow of fluids such as sediment, liquid containing solid, water mixed oil and wet steam. This orifice plate is used with its eccentric bore at the bottom of the pipe in order to prevent accumulation of sediment. Likewise, for gas or vapor, eccentric bore can be located at the top of the pipe to avoid stay of gas or vapor in the pipe. Eccentric orifice plate can be used with flange or vena contracta taps but these taps should be located at 180° or 90° to the eccentric opening.

Segmental Bore Type

Segmental bore type is generally used for the same service as the eccentric orifice plate. Segmental bore opening can be placed either at the top or bottom of the pipe. However, it is generally used in service which requires the bore at the bottom of the pipe. For the best accuracy, the tap should be located at 180° from the center of tangency.

Quadrant Edged Type

Quadrant edged type is specially designed for flow measurement of viscous fluids such as heavy crude oil, syrup and slurry that have a low Reynolds number, and the inlet of the bore is machined with rounded edge.

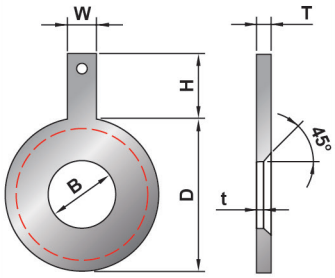	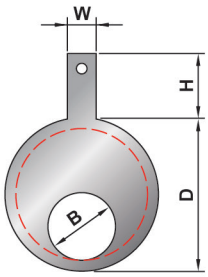	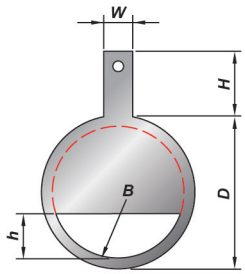	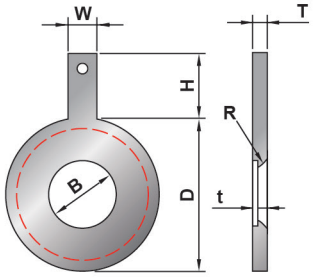
Concentric Bore Type	**Eccentric Bore Type**	**Segmental Bore Type**	**Quadrant Edged Type**
Suitable for standard service such for clean liquid, gas and vapor, and special material should be considered for harsh service.	Applicable for liquids containing gases or solids. This orifice plate is used with its eccentric bore at the bottom to avoid stay of solid, or at the top to avoid stay of gas or vapor.	Applicable for fluids containing heavy sediments. B is 98% ofline I.D and h is a height of circular segment.	Applicable for fluids that have high viscosity and/or low Reynolds number. High durability and life cycle can be affected by the thickness of plate and rounded edge of bore.

Application of Orifice Plate

Bore Type \ Fluid Type	Fluid Type					Nominal Line Size Normally Used	
	Gas (Vapor)		Liquid				
	Clean	Dirty	Clean	Dirty	Viscous	mm	inch
Concentric Square Edge	E	X	E	O	X	40 to 1500	1-1/2 to 60
Concentric Quadrant Edge	X	X	E	O	E	40 to 250	1-1/2 to 10
Eccentric Square Edge	O	O	O	E	X	100 to 350	4 to 14
Segmental Square Edge	O	O	O	E	X	100 to 350	4 to 14

- E : Designed for this application
- X : Not designed for this application
- O : Normally applicable for this application

Specification

Operating Conditions	Line fluid capability	Clean liquids, gases, and low-velocity vapor(steam)flow.
	Temperature Rating	Depends on material of construction
	Pressure Rating	Maximum working pressure is per ANSI B16.5
Line Size Capabilities	Line sizes between 1/2″ through 36″	
Plate Material	304SS or 316SS Stainless steel. Monel, Hastelloy or other as required.	
Beta Ratio Capability	Custom sized and designed for Beta ratio range between 0.20 through 0.75	
Minimum Pipe Reynolds Number	Must be Greater than 10,000	
Head Loss of Differential	Varies from 50% to 70% of differential depending on application conditions and beta ratio.	
Accuracy	Between ±0.5% to ±2.0% of full scale.	

Dimension Table of Orifice Plate

■ Unit : inch

NOMINAL PIPE SIZE (inches)	ANSI 125# 150# D	ANSI 250# 300# D	ANSI 400# D	ANSI 600# D	ANSI 900# D	ANSI 1500# D	ANSI 2500# D	FOR ALL PRESSURE RATINGS					
								H	W	(AGA) T	t	Blank Weight (lbs)	(ISA) t
1/2″	1.875	2.125	2.125	2.125	2.500	2.500	2.750	4	1	.125	.015	1	.125
3/4″	2.250	2.625	2.625	2.625	2.750	2.750	3.000	4	1	.125	.015	1	.125
1″	2.625	2.875	2.875	2.875	3.125	3.125	3.375	4	1	.125	.020	1	.125
1-1/4″	3.000	3.250	3.250	3.250	3.500	3.500	4.125	4	1	.125	.020	1	.125
1-1/2″	3.375	3.750	3.750	3.750	3.875	3.875	4.625	4	1	.125	.030	1	.125
2″	4.125	4.375	4.375	4.375	5.625	5.625	5.750	4	1	.125	.030	1	.125
2-1/2″	4.875	5.125	5.125	5.125	6.500	6.500	6.625	4	1	.125	.030	1	.125
3″	5.375	5.875	5.875	5.875	6.625	6.875	7.750	4	1	.125	.030	1	.125
4″	6.875	7.125	7.000	7.625	8.125	8.250	9.250	4	1	.125	.060	2	.125
5″	7.750	8.500	8.375	9.500	9.750	10.000	11.000	4	1	.125	.060	2	.125
6″	8.750	9.875	9.750	10.500	11.375	11.125	12.125	6	1-1/2	.125	.060	3	.125
8″	11.000	12.125	12.000	12.625	14.125	13.875	15.250	6	1-1/2	.125	.125	5	.125
10″	13.375	14.250	14.125	15.750	17.125	17.125	18.750	6	1-1/2	.125	.125	7	.125
12″	16.125	16.250	16.500	18.000	19.625	20.500	21.625	6	1-1/2	.250	.250	18	.125
14″	17.750	19.125	19.000	19.375	20.500	22.750		6	1-1/2	.250	.250	24	.125
16″	20.250	21.250	21.125	22.250	22.625	25.250		6	1-1/2	.375	.375	40	.250
18″	21.500	23.375	23.250	24.000	25.000	27.625		6	1-1/2	.375	.375	50	.250
20″	23.750	25.625	25.375	26.750	27.375	29.625		6	1-1/2	.375	.375	65	.250
22″	26.000	27.750	27.500	28.875				6	1-1/2	.375	.375	72	.250
24″	28.125	30.375	30.125	31.000	32.875	35.500		6	1-1/2	.375	.375	90	.250
30″	34.625	37.375	37.250	38.125				6	1-1/2	.500	.500	160	.250
36″	41.125	43.875	43.875	44.375				6	1-1/2	.500	.500	220	.375



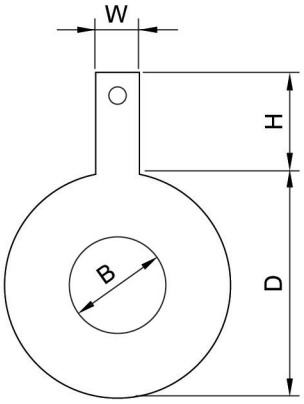

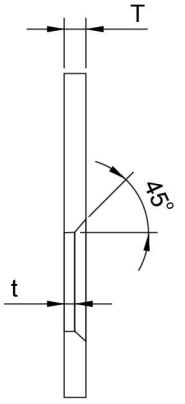

Dimension Table of Orifice Assembly

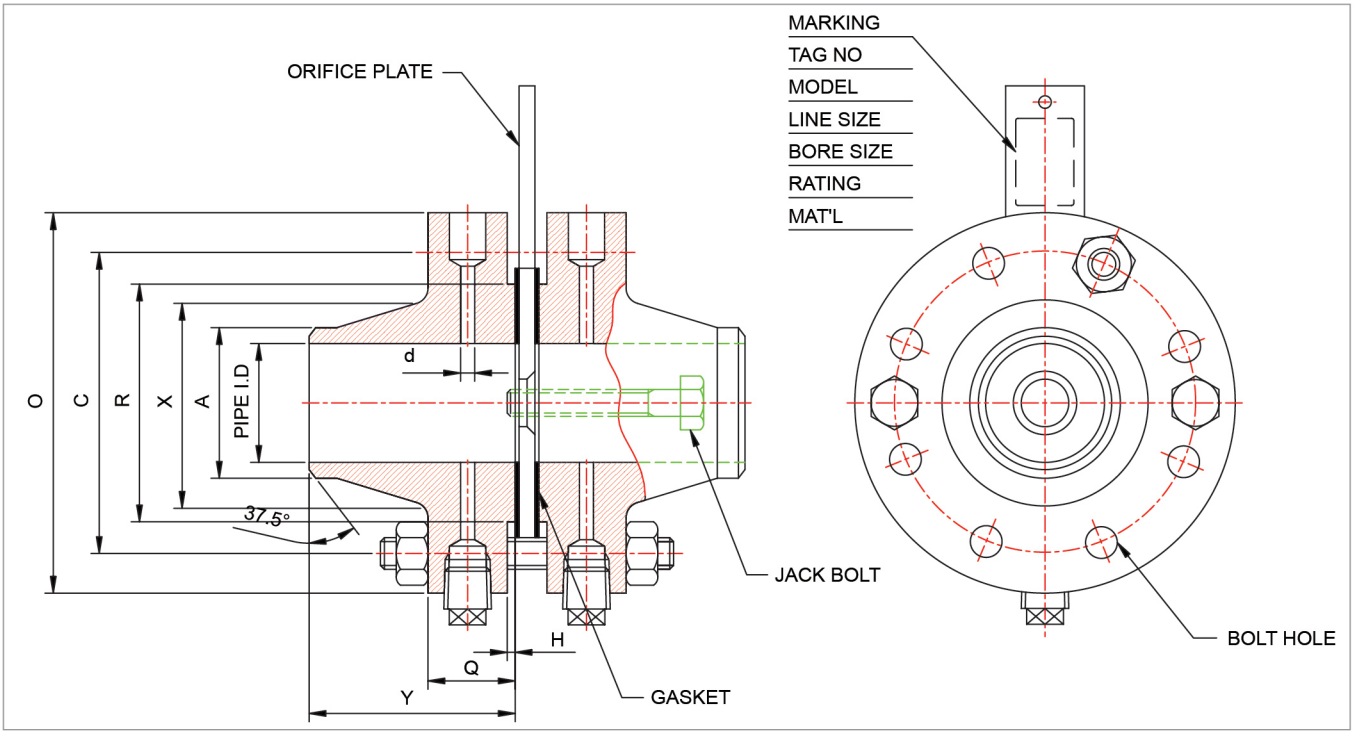

FOR ANSI 300 FLANGES

Unit : mm

Nominal Pipe Size	Diam of Flange O	Thickness of Flange Q	D.of Hub at of Weld'g A	Diam of Hub X	Length Through Hub Y	O.D of Raised Face R	Depth of Groove H	Diam of Tab Holes d	Diam of Bolts Circle C	Number of Bolt	Bolt Size& Length
1/2″	95.3	38.1	21.3	38.1	76.2	35.1	1.5	6.4	66.5	4	1/2″x140
3/4″	117.3	38.1	26.7	47.8	79.5	42.9	1.5	6.4	82.6	4	5/8″x150
1″	124	38.1	33.5	53.8	82.6	50.8	1.5	6.4	88.9	4	5/8″x150
1-1/2″	155.4	38.1	48.3	69.9	85.9	73.2	1.5	6.4	114.3	4	3/4″x165
2″	165.1	38.1	60.5	84.1	85.9	91.9	1.5	6.4	127	8	5/8″x150
2-1/2″	190.5	38.1	73.2	100.1	88.9	104.6	1.5	6.4	149.4	8	3/4″x165
3″	209.6	38.1	88.9	117.3	88.9	127	1.5	9.5	168.1	8	3/4″x165
4″	254	38.1	114.3	146.1	91.9	157.2	1.5	12.7	200.2	8	3/4″x165
6″	317.5	38.1	168.4	206.2	100.1	215.9	1.5	12.7	269.7	12	3/4″x165
8″	381	41.2	219.2	260.4	111.3	269.7	1.5	12.7	330.2	12	7/8″x185
10″	444.5	47.8	273.1	320.5	117.3	323.9	1.5	12.7	387.4	16	1″x210
12″	520.7	50.8	323.9	374.7	130	381	1.5	12.7	450.9	16	1-1/8″x230
14″	584.2	53.8	355.6	425.5	142.7	412.8	1.5	12.7	514.4	20	1-1/8″x235
16″	647.2	57.2	406.4	482.6	146.1	469.9	1.5	12.7	571.5	20	1-1/4″x260
18″	711.2	60.5	457.2	533.4	158.8	533.4	1.5	12.7	628.7	24	1-1/4″x265
20″	774.7	63.5	508	587.2	162.1	584.2	1.5	12.7	585.8	24	1-1/4″x270
24″	914.4	69.9	609.6	701.5	168.1	692.2	1.5	12.7	812.8	24	1-1/2″x310

FOR ANSI 600 FLANGES

■ Unit : mm

Nominal Pipe Size	Diam of Flange O	Thickness of Flange Q	D.of Hub at of Weld'g A	Diam of Hub X	Length Through Hub Y	O.D of Raised Face R	Depth of Groove H	Diam of Tab Holes d	Diam of Bolts Circle C	Number of Bolt	Bolt Size& Length
1/2″	95.3	38.1	21.3	38.1	76.2	35.1	1.5	6.4	66.5	4	1/2″x140
3/4″	117.3	38.1	26.7	47.8	79.5	42.9	1.5	6.4	82.6	4	5/8″x150
1″	124	38.1	33.5	53.8	82.6	50.8	1.5	6.4	88.9	4	5/8″x150
1-1/2″	155.4	38.1	48.3	69.9	85.9	73.2	1.5	6.4	114.3	4	3/4″x165
2″	165.1	38.1	60.5	84.1	85.9	91.9	1.5	6.4	127	8	5/8″x150
2-1/2″	190.5	38.1	73.2	100.1	88.9	104.6	1.5	6.4	149.4	8	3/4″x165
3″	209.6	38.1	88.9	117.3	88.9	127	1.5	9.5	168.1	8	3/4″x165
4″	273.1	44.5	114.3	152.4	108	157.2	6.4	12.7	216	8	7/8″x190
6″	355.6	54.2	168.4	222.3	123.7	215.9	6.4	12.7	292.1	12	1″x220
8″	419.1	62	219.2	273.1	139.8	269.7	6.4	12.7	349.3	12	1-1/8″x250
10″	508	69.9	273.1	342.9	158.8	323.9	6.4	12.7	431.8	16	1-1/4″x280
12″	558.8	72.9	323.9	400.1	161.8	381	6.4	12.7	489	20	1-1/4″x285
14″	603.3	76.3	355.6	431.8	171.5	412.8	6.4	12.7	527.1	20	1-3/8″x305
16″	685.8	82.6	406.4	495.3	184.2	469.9	6.4	12.7	603.3	20	1-1/2″x335
18″	743	89	457.2	546.1	190.6	533.4	6.4	12.7	654.1	20	1-5/8″x360
20″	812.8	95.3	508	609.6	196.9	584.2	6.4	12.7	723.9	24	1-5/8″x375
24″	939.8	108	609.6	717.6	209.6	692.2	6.4	12.7	838.2	24	1-7/8″x425

FOR ANSI 900 FLANGES

■ Unit : mm

Nominal Pipe Size	Diam of Flange O	Thickness of Flange Q	D.of Hub at of Weld'g A	Diam of Hub X	Length Through Hub Y	O.D of Raised Face R	Depth of Groove H	Diam of Tab Holes d	Diam of Bolts Circle C	Number of Bolt	Bolt Size& Length
1/2″	120.7	44.5	21.3	38.1	82.6	35.1	6.4	6.4	82.6	4	3/4″x175
3/4″	130	44.5	26.7	44.5	89	42.9	6.4	6.4	88.9	4	3/4″x175
1″	149.4	44.5	33.5	52.3	89	50.8	6.4	6.4	101.6	4	7/8″x190
1-1/2″	177.8	44.5	48.3	69.9	95.3	73.2	6.4	6.4	124	4	1″x200
2″	215.9	44.5	60.5	104.6	108	91.9	6.4	6.4	165.1	8	7/8″x190
2-1/2″	244.3	47.5	73.2	124	111	104.6	6.4	6.4	190.5	8	1″x205
3″	241.3	44.5	88.9	127	108	127	6.4	9.5	190.5	8	7/8″x190
4″	292.1	50.9	114.3	158.8	120.7	157.2	6.4	12.7	235	8	1-1/8″x225
6″	381	62	168.4	235	146.1	215.9	6.4	12.7	317.5	12	1-1/8″x250
8″	469.9	69.9	219.2	298.5	168.5	269.7	6.4	12.7	393.7	12	1-3/8″x290
10″	546.1	76.3	273.1	368.3	190.6	323.9	6.4	12.7	469.9	16	1-3/8″x305
12″	609.6	85.6	323.9	419.1	206.6	381	6.4	12.7	533.4	20	1-3/8″x325
14″	641.4	92.3	355.6	450.9	219.3	412.8	6.4	12.7	558.8	20	1-1/2″x350
16″	704.9	95.3	406.4	508	222.3	469.9	6.4	12.7	616	20	1-5/8″x370
18″	787.4	108	457.2	565.2	235	533.4	6.4	12.7	685.8	20	1-7/8″x425
20″	857.3	114.4	508	622.3	254.1	584.2	6.4	12.7	749.3	20	2″x450
24″	1041.4	146.1	609.6	749.3	298.5	692.2	6.4	12.7	901.7	20	2-1/2″x560

FOR ANSI 1500 FLANGES

Unit : mm

Nominal Pipe Size	Diam of Flange O	Thickness of Flange Q	D.of Hub at of Weld'g A	Diam of Hub X	Length Through Hub Y	O.D of Raised Face R	Depth of Groove H	Diam of Tab Holes d	Diam of Bolts Circle C	Number of Bolt	Bolt Size& Length
1/2″	120.7	44.5	21.3	38.1	82.6	35.1	6.4	6.4	82.6	4	3/4″x175
3/4″	130	44.5	26.7	44.5	89	42.9	6.4	6.4	88.9	4	3/4″x175
1″	149.4	44.5	33.5	52.3	89	50.8	6.4	6.4	101.6	4	7/8″x190
1-1/2″	177.8	44.5	48.3	69.9	95.3	73.2	6.4	6.4	124	4	1″x200
2″	215.9	44.5	60.5	104.6	108	91.9	6.4	6.4	165.1	8	7/8″x190
2-1/2″	244.3	47.5	73.2	124	111	104.6	6.4	6.4	190.5	8	1″x205
3″	266.7	54.2	88.9	133.4	123.7	127	6.4	9.5	203.2	8	1-1/8″x235
4″	311.2	60.2	114.3	162.1	130.4	157.2	6.4	12.7	241.3	8	1-1/4″x260
6″	393.7	89	168.4	228.6	177.9	215.9	6.4	12.7	317.5	12	1-3/8″x330
8″	482.6	98.3	219.2	292.1	219.3	269.7	6.4	12.7	393.7	12	1-5/8″x375
10″	584.2	114.4	273.1	368.3	260.4	323.9	6.4	12.7	482.6	12	1-7/8″x435
12″	673.1	130.4	323.9	450.9	288.8	381	6.4	12.7	571.5	16	2″x480
14″	749.3	139.8	355.6	495.3	304.9	412.8	6.4	12.7	635	16	2-1/4″x525
16″	825.5	152.5	406.4	552.5	317.6	469.9	6.4	12.7	704.9	16	2-1/2″x580
18″	914.4	168.5	457.2	596.9	333.6	533.4	6.4	12.7	774.7	16	2-3/4″x635
20″	984.3	184.2	508	641.4	362	584.2	6.4	12.7	831.9	16	3″x695
24″	1168.4	209.6	609.6	762	412.8	692.2	6.4	12.7	990.6	16	3-1/2″x795

Required Straight Pipe Length

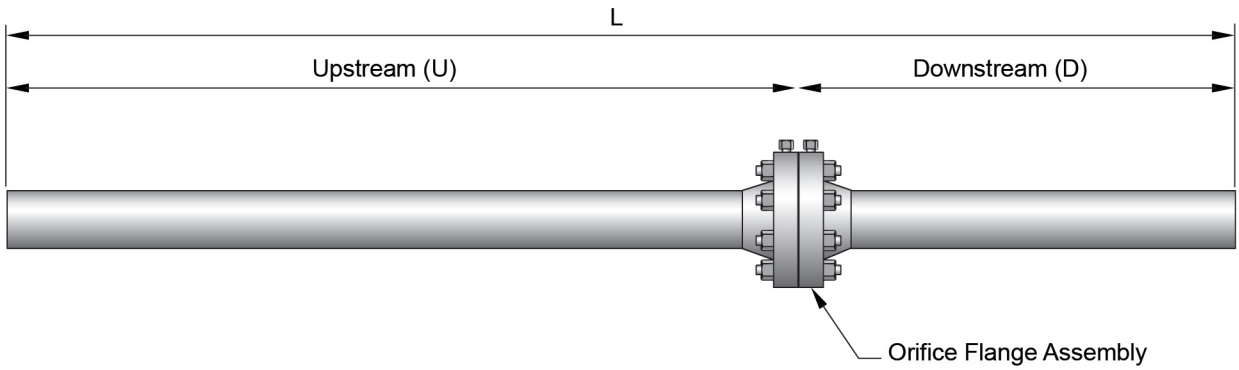

	Straight Unobstructed Meter Tube Length from the Upstream Side of the Orifice Plate		Overall Laying Length	Pipe I.D (inches)	
Pipe Size	U	D	L	Sch. 40	Sch. 80
2″	5′-0″	3′-0″	8′-0″	2.067″	1.939″
3″	6′-0″	4′-0″	10′-0″	3.068″	2.900″
4″	8′-0″	4′-0″	12′-0″	4.026″	3.826″
6″	12′-0″	5′-0″	17′-0″	6.065″	5.761″
8″	15′-0″	5′-0″	20′-0″	7.981″	7.625″
10″	19′-0″	6′-0″	25′-0″	10.020″	9.564″
12″	21′-0″	7′-0″	28′-0″	11.938″	11.376″

Orifice Plate with Holder Ring
Model : HOP-RJ

Overview

Holder Ring Assembly is a combination of holder ring and orifice plate which is designed for RTJ (Ring Type Joint) flange. The holder ring has a function of holder for orifice plate and gasket to prevent a leakage of fluid. Metallic Sealing System is appropriate for high temperature and pressure condition. Flange tap is generally used as pressure taps.

Specification

Line Size Capabilities **End Arrangement**	Line sizes between 1/2" through 24" Octagonal Ring Type, Oval Formed Type
Material	304SS or 316SS Stainless steel. Monel, Hastelloy or other as required.
Flange Rating	ANSI 300#, 600#, 900#, and 1500# Ring Type Joint(RTJ)
Pressure Taps	Flange Taps
Drain and Vent Hole	Per ASME recommendations. Not drilled for orifice bores smaller than 25.4mm

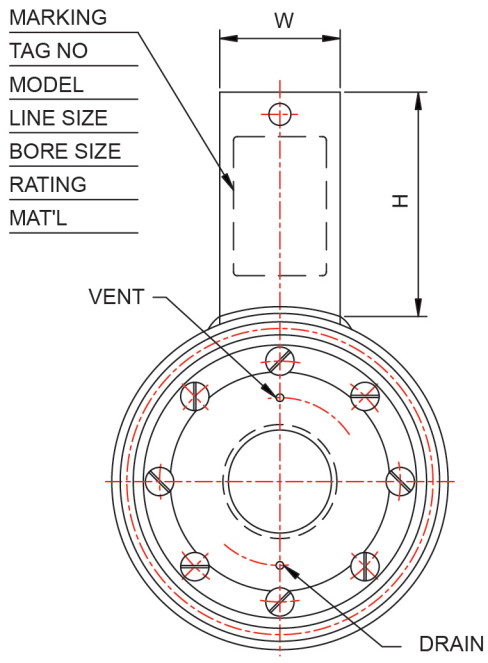

ORIFICE HANDLE (W & H)

1/2"~3" : W =25, H=100
4"~8" : W =38, H=120
10"~14" : W =38, H=140
16"~18" : W =38, H=160
20"~24" : W =38, H=190

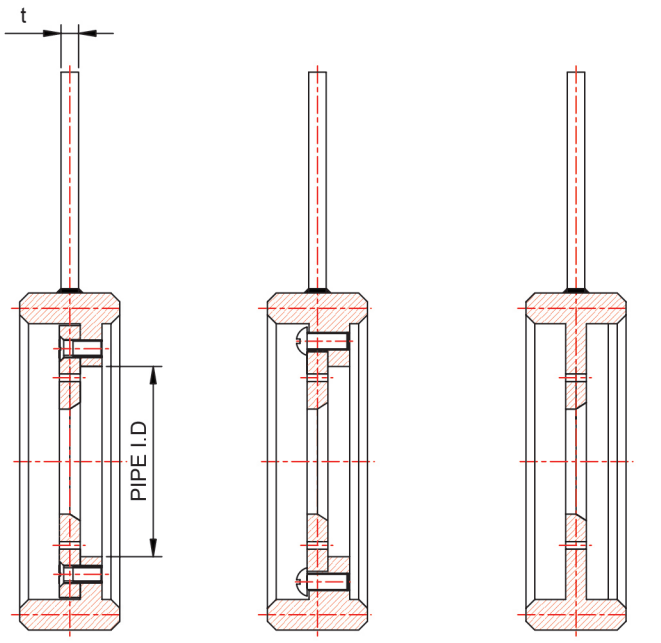

(1/2"-2-1/2") (3"-24") INTEGRAL TYPE

RING TYPE : OCTAGONAL or OVAL FORMED

Orifice Ring Assembly
Model : HOR

Overview

Orifice Ring Assembly is used for the flow measurement, especially for small sized pipe line with low pressure. It is composed of an orifice plate and two orifice rings, and corner tap is used as pressure taps.

Specification

Line Size Capabilities	Line sizes between 1/2" through 24"
Material	304SS or 316SS Stainless steel. Monel, Hastelloy or other as required.
Gasket Material / Thickness	Asbestos, Non-Asbestos, Teflon / 1.5mm, 2.0mm, 3.0mm
Pressure Taps / Size	Corner Taps / PT 1/2", NPT 1/2" or other as required.
Flange Rating	ANSI 150#, 300#

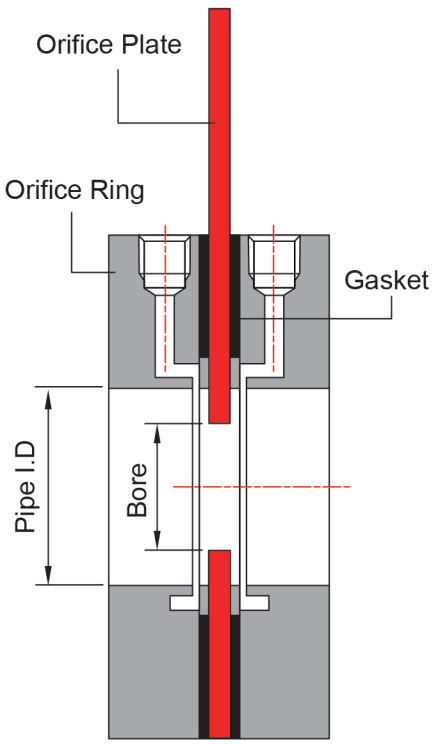

ORIFICE RING ASSEMBLIES

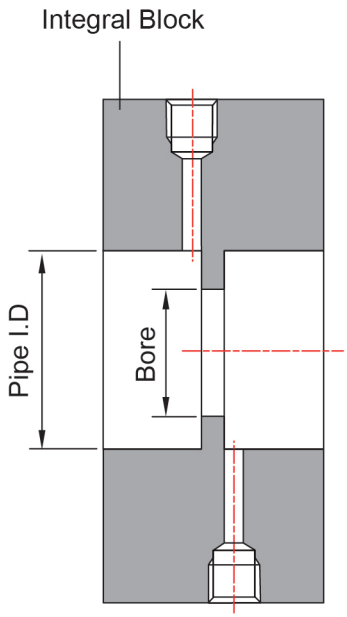

ORIFICE BLOCKS

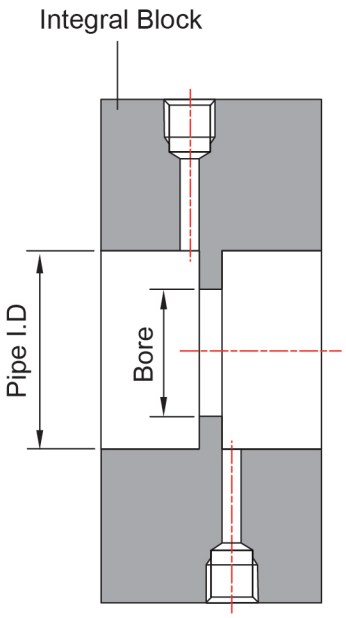

RING TYPE ORIFICE BLOCKS

Orifice Flange Assembly
Model : HOF

Typical Components of Orifice Assembly

Orifice plate requires flange assembly to be installed at the site after precisely machining of bore diameter. It is assembled between flanges together with gasket and pressure taps are machined on the flanges for accurate differential pressure measurement.

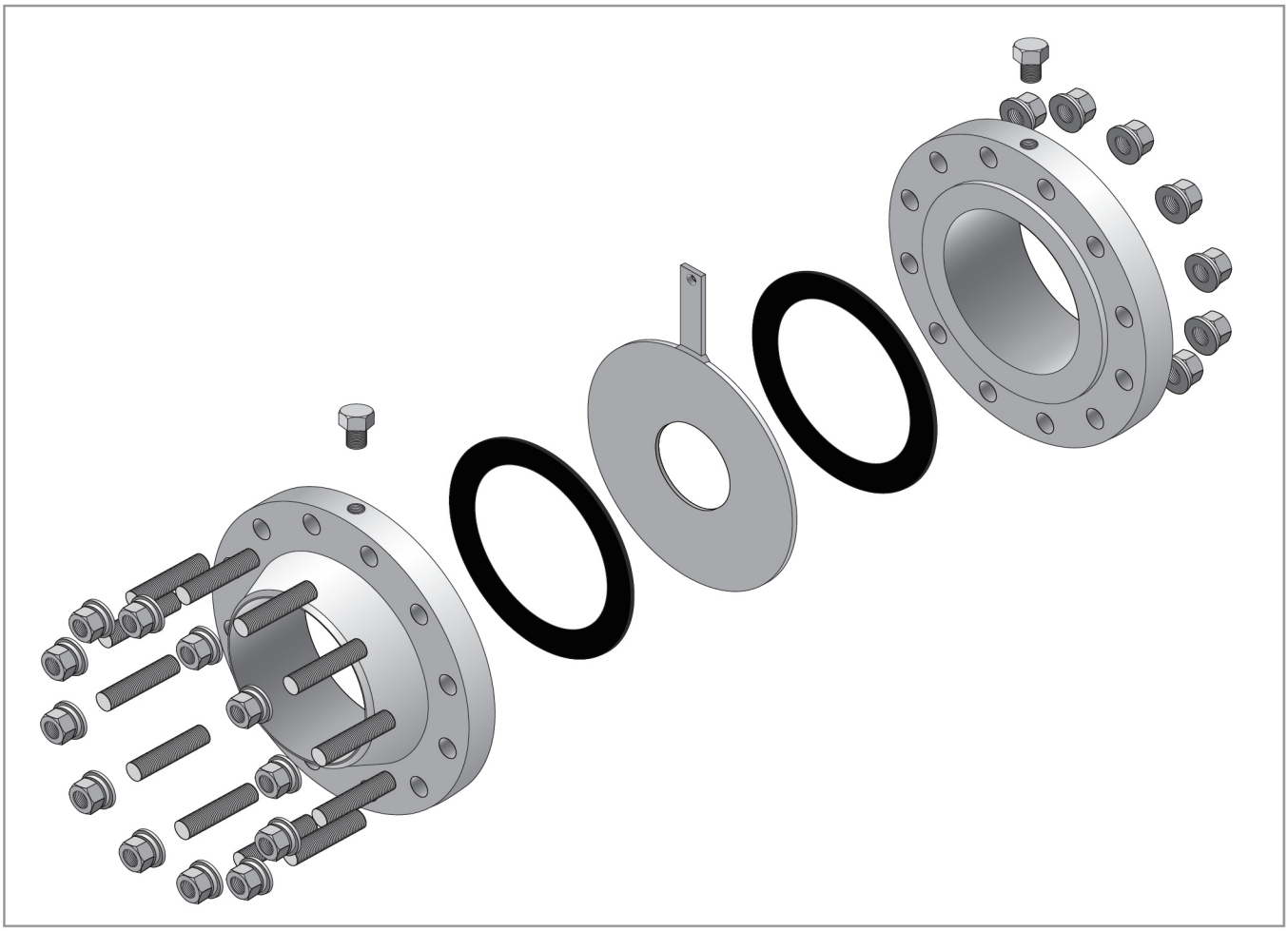

제품 사양

Line Size Capabilities End Arrangement	Line sizes between 1” through 24” Welding neck Type, Slip on, Socket Weld, Ring joint WN
Material	304SS or 316SS Stainless steel. Monel, Hastelloy or other as required.
Flange Rating	ANSI 300#, 600#, 900# and 1500#
Pressure Tap / Size	Flange Taps / PT 1/2”, NPT 1/2” or other as required.
Gasket Material / Thickness	Non-Asbestos, Sprial wound / 1.5mm, 4.5mm

Restriction Orifice
Model : HRO

Overview

HRO Series is an element to use for reduction of the fluid pressure in the pipeline and can be applied for all liquid, gas and steam. When the pressure is rapidly reduced from high to low, the pipe and other device can be damaged due to the noise and vibration caused by cavitation phenomenon. However, HRO Series can reduce a pressure in the pipeline without cavitation phenomenon. HRO Series has been developed with KHNP (Korea Hydro & Nuclear Power) to apply for Q class in the nuclear power plant. It is designed and manufactured according to a seismic analysis, differential pressure, beta ratio, number of holes and process conditions, etc. There are two types, flat and conical in HRO Series and flat type includes multiple and single type. HRO Series is designed and manufactured using our software developed by ourselves under the strict quality assurance system.



		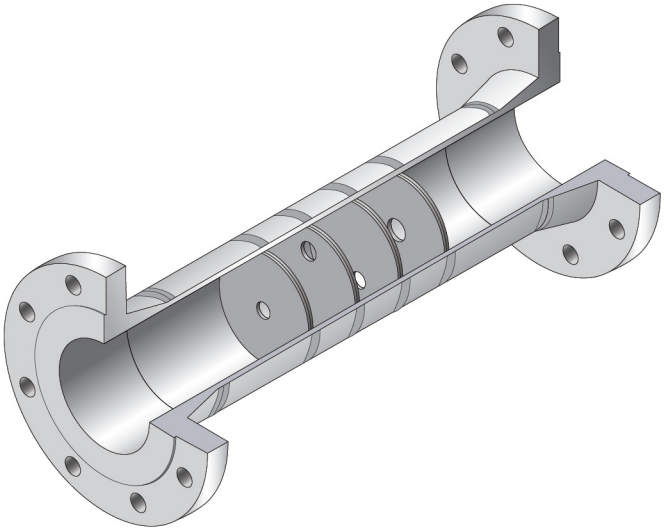
Flat Type	Conical Type	Multi Stage Type



Orifice

In order to calculate a differential pressure and design an Orifice, below information should be informed.

Flow Data \ Tag No.			
Fluid Name / Fluid State			
Max. / Nor. Flow Rate (m^3/hr)			
Max. / Nor. Temperature (℃)			
Max. / Nor. Pressure (psia)			
Pipe Inside Diameter (mm)			
Density at Base (kg/m^3)			
Density at Operating (kg/m^3)			
Operating Viscosity (cP)			