TYPE SM HEAVY DUTY MAGNETS
스크랩 마그네트



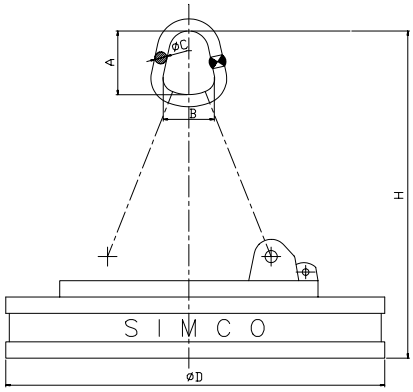

▷ Steel Fabricated case ▷ Water Proof ▷ 50% ED Duty Cycle
▷ Class C Insulation ▷ Larger Center pole ▷ 3-Tagline Rings

SM type magnet is SIMCO's answer to the scrap industry's need for a low cost, high performance lifting magnet that can produce more magnetic handling profits per workshift, per day, year-in and year-out.

TYPE	DIMENSION(mm)					SPECIFICATION			LIFTING CAPACITY(Kg)		
	D	H	A	B	C	WT(Kg)	AMPS	KW	#2 H.M.	DROP BALL	#1 H.M.
50DASM	500	800	90	160	28	300	8	0.88			1700
70DASM	700	880	110	180	32	560	18	4.0		2500	200/350
90DASM	900	1000	125	210	38	720	28	6.2	60/100	4500	400/600
110DASM	1100	1100	150	220	38	1350	48	10.6	100/150	6500	800/1000
130DASM	1300	1250	175	250	50	1900	60	13.2	200/250	8200	1100/1400
150DASM	1500	1400	190	290	50	2850	78	17.3	300/400	11000	1500/1900
165DASM	1650	1400	190	290	55	3000	84	18.5	350/470	13500	1700/2200
180DASM	1800	1650	210	310	60	4000	110	24.2	400/600	14500	2100/2700
210DASM	2100	1650	230	370	70	6500	130	28.6	700/900	21000	2700/3500
240DASM	2400	1800	250	400	80	9000	180	37.6	1000/1300	36000	3500/4600

DASM - Aluminum coil wound deep field.
ASM - Aluminum coil wound standard field.
EDASM - Ellipse type extra-deep field.
Ellipse type length ; D+300mm

SIMCO SUNGSUNG INDUSTRIAL MACHINERY CO. http://www.simco.co.kr