BNN-TYPE

FEATURES ;

- Accuracy guaranteed to 0.003mm TIR (0.0001").
- Excellent for engine lathes and CNC lathes.
- Heat-treated point to HRc 60±2.
- High performance lip seal and deflected shaft design protects bearing space (Double Angular Contact bearing) from invasion by dust and coolant.
- Heat-treated body for extra strength, rigidity and long life.
- Draw-off nut type. (Help to easy release from tail-stock)



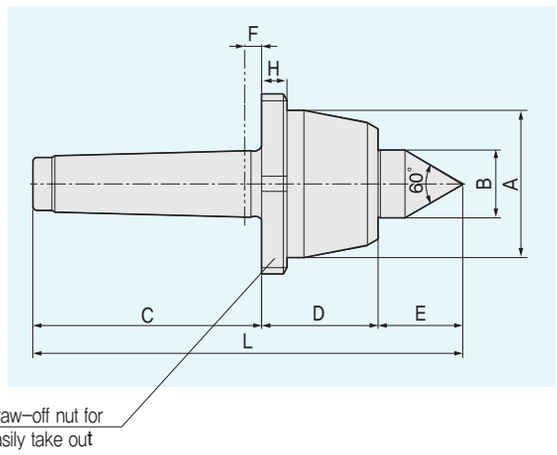

Dimension

02	1	0	0	MT

Unit : mm, kg

MODEL	MT	A	B	C	D	E	F	H	L	W.P Weight	Max, R.P.M	Weight	Max, Run Out	AN NUT NO.
021002	2	50	25	68	43.5	29.5	6	10	141	500	5,000	1	0.003	AN 09
021003	3	50	25	85	43.5	29.5	6	10	158	500	5,000	1	0.003	AN 09
021004	4	69	32	108	55	40	8	12	203	800	3,800	2.1	0.003	AN 13
021005	5	88	40	136	70	50.5	8	16	256.5	2,000	3,000	5	0.003	AN 17
021006	6	105	50	189	81.5	57.5	10	18	328	3,500	2,800	10.5	0.005	AN 20

BNNC-TYPE

FEATURES ;

- Accuracy guaranteed to 0.003mm TIR (0.0001").
- Excellent for engine lathes and CNC lathes.
- Heat-treated point to HRc 90±5.
- High performance lip seal and deflected shaft design protects bearing space(Double Angular Contact bearing) from invasion by dust and coolant.
- Heat-treated body for extra strength, rigidity and long life.
- Draw-off nut type. (Help to easy release from tail-stock)



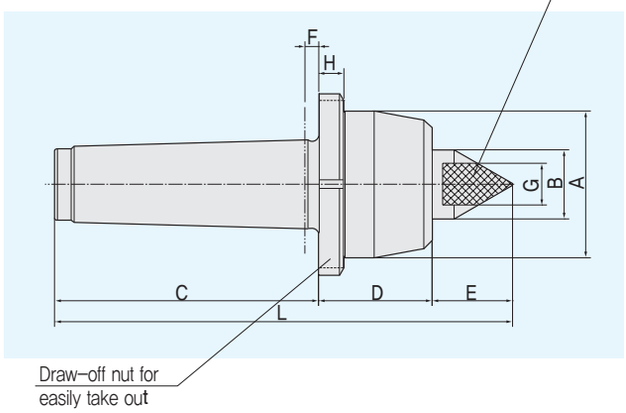

Dimension

02	2	0	0	MT

Unit : mm, kg

MODEL	MT	A	B	C	D	E	F	H	G	L	W.P Weight	Max, R.P.M	Weight	Max, Run Out	AN NUT NO.
022002	2	50	25	68	43.5	29.5	6	10	10	141	500	5,000	1	0.003	AN 09
022003	3	50	25	85	43.5	29.5	6	10	10	158	500	5,000	1	0.003	AN 09
022004	4	69	32	108	55	40	8	12	14	203	800	3,800	2.1	0.003	AN 13
022005	5	88	40	136	70	50.5	8	16	18	256.5	2,000	3,000	5	0.003	AN 17
022006	6	105	50	189	81.5	57.5	10	18	30	328	3,500	2,800	10.5	0.005	AN 20