Carbon Monoxide Gas Sensor

Product Data Sheet
Model #SS2128

Applications

- Ideal for portable instrument
- Industry safety (ambient air monitoring applications)
- Residential CO alarms
- Fire alarms
- Etc.



Specifications

Performance Characteristics	
Output Signal	70±20 nA / ppm
Typical Baseline Range (pure air)	≤ ±2 ppm CO equivalent
Filter Capacity	≥20,000 ppm hours
T90 Response Time	<25 seconds
Measurement Range	0-2,000 ppm
Maximum Overload	5,000 ppm
Linearity	Linear up to 2,000 ppm
Repeatability	≤ ±2 ppm CO equivalent
Recommended Load Resistor	10 ohms
Resolution (Electronics Dependent)	≤0.5 ppm typical
Environmental	
Temperature Range Continuous	-20℃ to +50℃
Pressure Range	800 to 1200 mbar
Operating Humidity Range	15% to 90% Rh
Life Time	
Long Term Output Drift	≤5% per annum
Recommended Storage Temp	0℃ to 20℃
Expected Operating Life	≥24 months in air
Standard Warranty	24 months from data od dispatch
Intrinsic Safety Data	
Maximum at 10,000ppm	80mA
Maximum o/c Voltage	<1.0V
Maximum s/c Current	<0.1A

Dimension



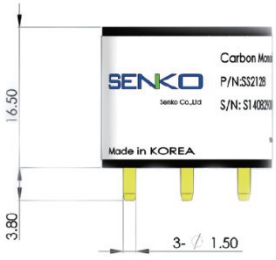

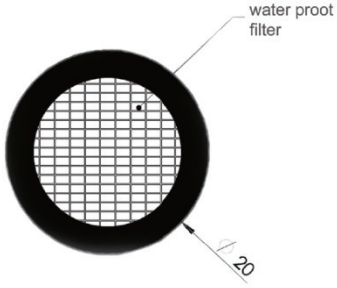

Due to ongoing research and product improvement, specifications are subject to change without notice

SENKO.CO.Ltd, 73, Oesammi-ro 15beon-gil, Gyeonggi-do, 447-230, South Korea
Telephone:+82-31-492-0445 Fax:+82-31-492-0446 E-mail:sales@senko.co.kr Website:www.senko.co.kr

Carbon Monoxide Gas Sensor

Product Data Sheet
Model #SS2128

Temperature effects

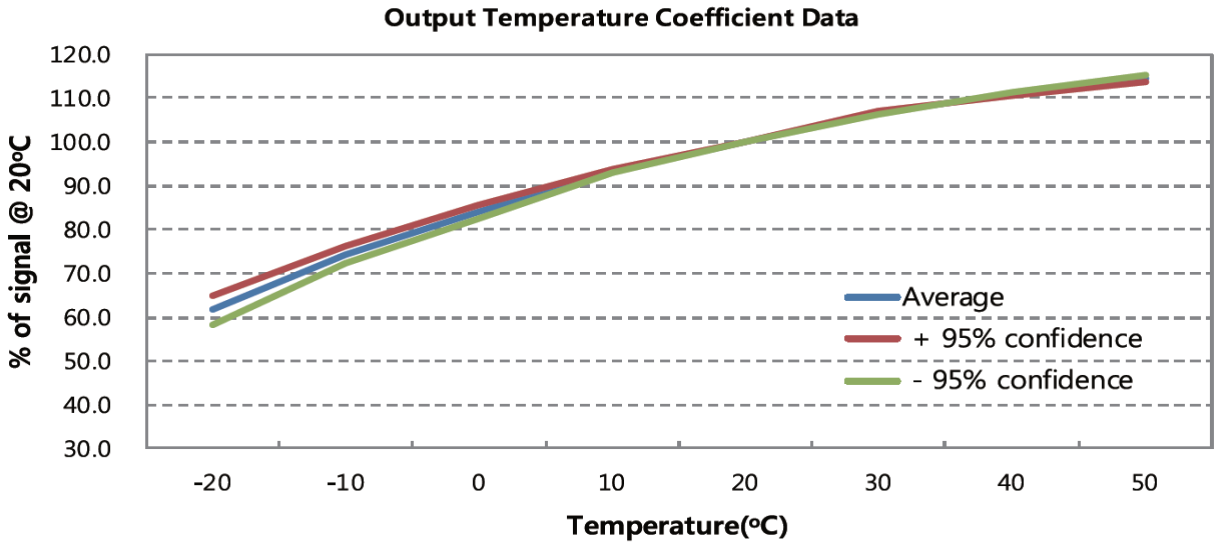

Cross sensitivity

Gas	Concentration [ppm]	Reading [ppm]
Carbon Monoxide	100	100
Hydrogen	100	<30
Hydrogen Sulfide	15	0
Sulfur Dioxide	5	0
Nitric Oxide	35	<3
Nitrogen Dioxide	20	0

Standard operating circuit

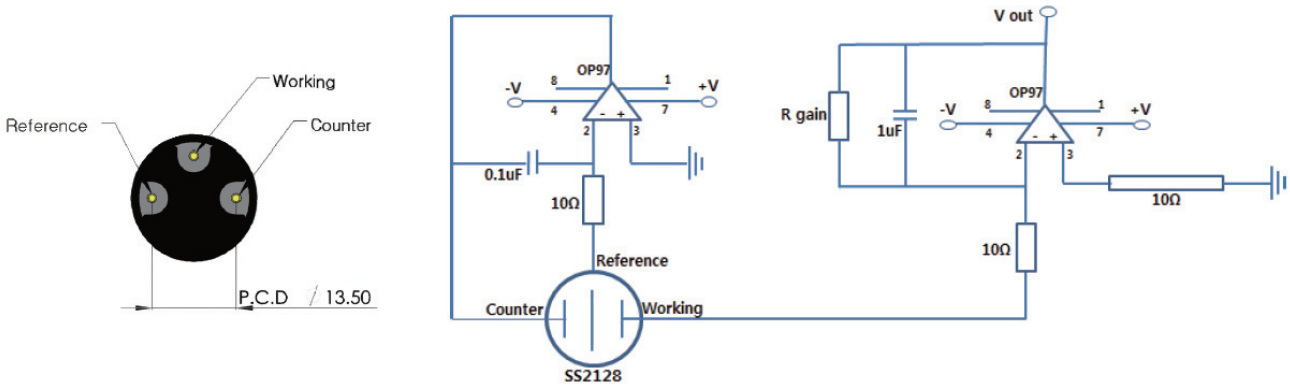

Due to ongoing research and product improvement, specifications are subject to change without notice

SENKO.CO.Ltd, 73, Oesammi-ro 15beon-gil, Gyeonggi-do, 447-230, South Korea
Telephone:+82-31-492-0445 Fax:+82-31-492-0446 E-mail:sales@senko.co.kr Website:www.senko.co.kr