Class II / PVD, SPUM PV



▲ PVD 50/1000



▲ SPUM PV 1000

- 전압 DC 600~1000V
- 동작 상태 표시 기능
- Mov Fault Alarm 기능 (DS형)

- Voltage : DC 600~1000V
- Indicators for fault and Power
- Remote contact is option

Technical data

Model		PVD	SPUM PV	
Electrical characteristics		PVD50/1000V(S)	600(DS)	1000(DS)
Max. continuous operating voltage	U_C	1000V	600V	1000V
Nominal discharge current (8/20)	I_n	20kA	20kA	20kA
Max. discharge current (8/20)	I_{max}	50kA	40kA	40kA
Voltage protection level at I_n	U_p	〈3.5kV	〈2.5kV	〈3.5kV
Response time	tA	〈25ns		
Temperature range		−40℃~+80℃		
Degree of protection		IP20		
Mounting		DIN rail 35 mm		

Dimensions / Internal configuration

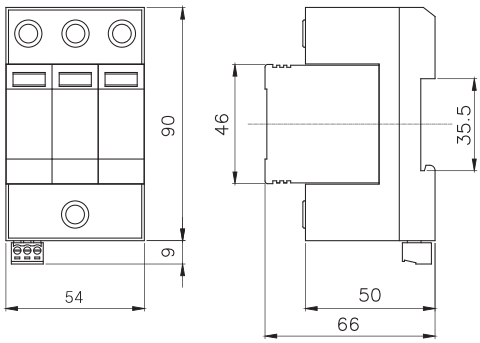

▲ PVD 50/1000

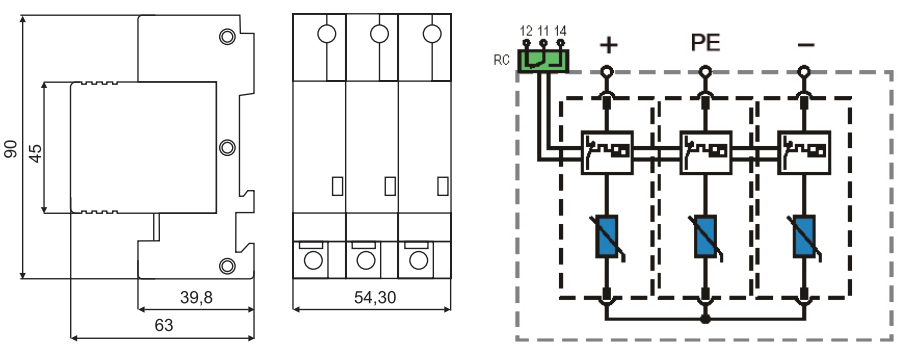

▲ SPUM PV