



092 SERIES

HIGH-FLOW REGULATOR



092 SERIES

This is revision by Jan of 2016

FUNCTIONAL SCHEMATIC

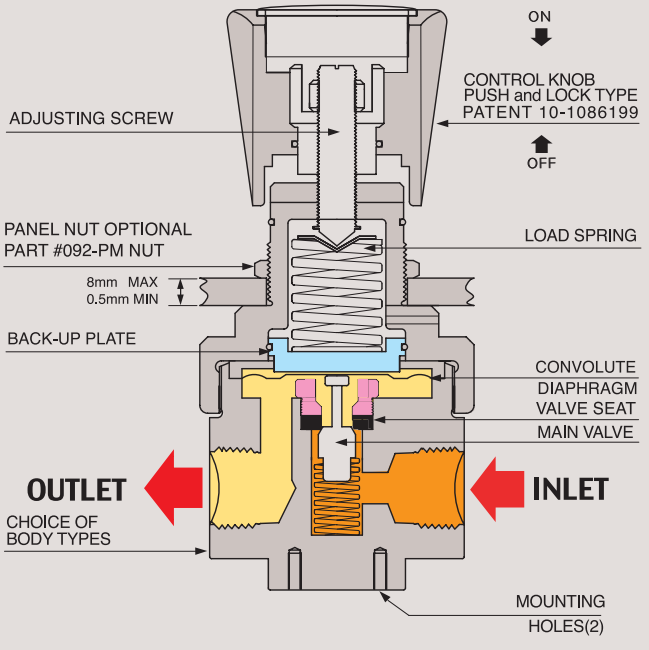

FLOW CHART

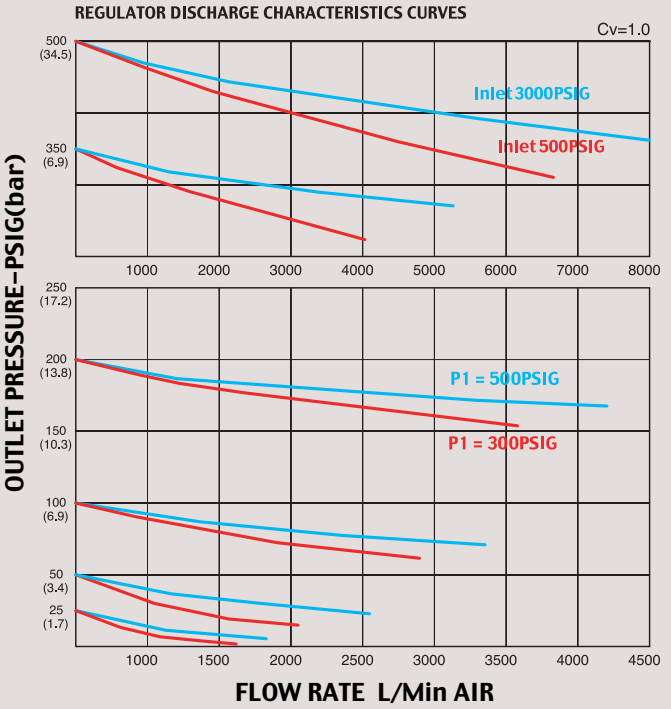

HIGH-FLOW REDUCING REGULATOR

092 SERIES

092시리즈는 정밀 배관 라인에서 고유량의 부식성 가스와 액체 등을 조절할 수 있도록 고안된 1/2″ NPT 타입 Regulator입니다. 본체와 내부의 모든 부품은 Stainless steel 316L로서 산업 전반의 부식성 가스, 고순도 가스와 액체 등에 강한 특성을 나타냅니다. 입구 압력은 3500psig(241bar) or 500psi(35bar)이고 출구 압력은 각각의 모델에 따라 최대 350psig(24bar)까지 사용할 수 있도록 제작 설계 되였습니다. 모든 DRASTAR Regulators는 외부적인 진동과 가스배관 라인의 미세 진동 등으로 인하여 초기 셋팅 값이 스스로 변하는 현상를 완전히 해결한 드라스타만의 Push and Lock 타입의 조절 손잡이를 적용하여 사용하기에 더욱 편리합니다. 조절 손잡이를 누르면 셋팅값이 변하는 것을 방지하며, 손잡이를 앞으로 당기면 자유롭게 원하는 압력으로 다시 셋팅 할 수 있는 드라스타만의 특허 10-1086199 Push and Lock 타입의 레귤레이터입니다.

092 Series gas and liquid regulators are specially designed to regulate the mass-flow of gases and liquid such as semi-conductor equipment production line and ultra-precision plumbing line with 1/2″ FNPT, etc. As the product' s body and all internal parts are made of stainless steel 316L that is strong for corrosiveness and liquid, they can be used for ultra-pure six-nine (99.9999) gases, corrosive gases, and liquids. Accordingly, special regard was paid to utmost safety and easy operation of the regulators.DRASTAR regulators are designed and manufactured for easier operation by equipping with the DRASTAR' s own developed push and lock type handle which completely prevents the self-change of pre-set value which can be caused by the vibration from outside or minute vibration at the gas pipeline. You can prevent the self-changing of pre-set value just by pushing the handle and reset the value freely by drawing the handle. DRASTAR has created and applied patent for this push and lock system for DRASTAR regulators (patent number 10-1086199).

SPECIFICATIONS

Ports	1/2″ NPT type Gauge Ports 1/4″ NPT
Leak Rate Certification	to $2x10^{-8}$ atm cc/sec Helium available.
Body Material	Stainless steel 316L
Bonnet Material	Nickel Plated Forged Brass/stainless steel 316L
Diaphragm	Stainless steel 316L
Main Valve	Stainless steel 316L
Valve Spring	Stainless steel 316L
Valve Seat	Teflon® (Kel-F, Polyimide, etc.. Optional)
Inlet Pressure Ranges	092-0000-1S, 3,500psig (238bar) 092-0000-1S-5, 500psig (35bar)
Outlet Pressure Ranges	25(1.7bar), 50(3.5bar), 100(7bar), 200(14bar), 350psig(24bar)
Self-Venting	092-0000-1S-V Optional
Operating Temperature	-40° C - +70° C(-40° F - +160° F) (standard) 092-0000-1S-H1, +120° C (Optional) 092-0000-1S-H2, +250° C (Optional)
Flow Capacity	Cv=1.0 (Cv=1.2 Optional)

INSTALLATION DIMENSIONS

METRIC EQUIVALENTS ARE IN PARENTHESES

■ GAUGE PORT OPTIONS

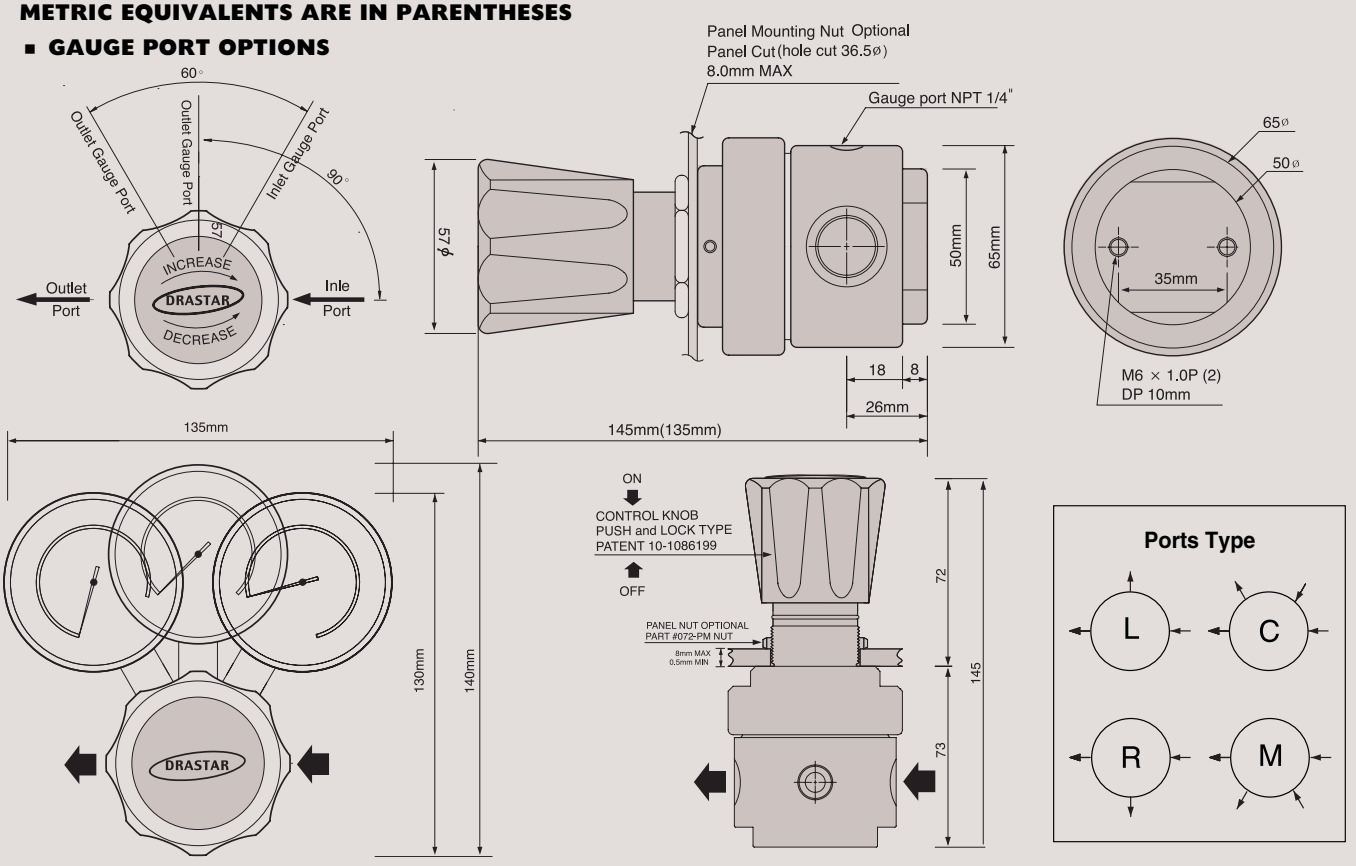

Features

- Suitable for the High-Flow Regulator of 1/2″ NPT Type
- Body and all internal parts are Stainless steel 316L
- Inlet 3500psig(241bar) or 500psi(35bar)
- Outlet 25psig(1.7bar), 50psig(3.5bar), 100psig(7bar), 200psig(14bar), 350psig(24bar)
- Panel mounting nut option
- W092-0000-1S / W MODEL IS ONLY TYPE for LIQUID or WATER

권장 사항

각 제품들은 최고의 안전성과 쉬운 조작성을 고려하여 제작되었습니다. 그러나 가장 안전하고 효율적인 Regulator 사용을 위해서는 실제 사용 압력을 각각 모델의 사용 압력에 25%~75% 이내에서 사용하면 가장 이상적인 압력을 사용할 수 있습니다, 정밀하고 원활한 동작과 제품의 수명 연장을 위해서는 위의 범위 내에서 사용하기를 적극 권장합니다.

Recommendations to Use

Each product is manufactured since being taken into consideration of the best safety and easy manipulation. However in order to use the regulator in most safe and effective way, you are recommended to use the actual pressure within the range of its 25% ~ 75%. For making precise, smooth movement and to prolong product life, strongly recommended to make a use within above mentioned range.

ORDERING INFORMATION

W 092 - 0025 L - 1S H - 5 - V - H1

W MODEL	BASIS SERIES NUMBER	OUTLET PRESSURE RANGE	PORT TYPE	FLOW CAPACITY	DIAPHRAGM MATERIAL	INLET PRESSURE	SELF VENTING	HIGH TEMPE-RATURE
W model is only type for Liquid or Water	Standard Inlet Pressure 3500psig (238 bar) Body : STS 316L Only	0025 = 25psi(1.7bar) 0050 = 50psi(3.5bar) 0100 = 100psi(7bar) 0200 = 200psi(14bar) 0350 = 350psi(24bar) 0500 = 500psi(34bar)	L = 3-Ports C = 4-Ports R = 3-Ports M = 4-Ports	1 = 1/2″ Female NPT 1S = Cv 1.0 Standard	STS 316L Standard H = Hastelloy-C Optional	5 = Inlet 500psi(35bar) Optional	V = Self-Venting Optional	H1 = 120° C H2 = 250° C H3 = 500° C Optional

※ For Gas 500PSIG Case : MUST use W Model Only

This is revision by Jan of 2016

092 SERIES PART LIST

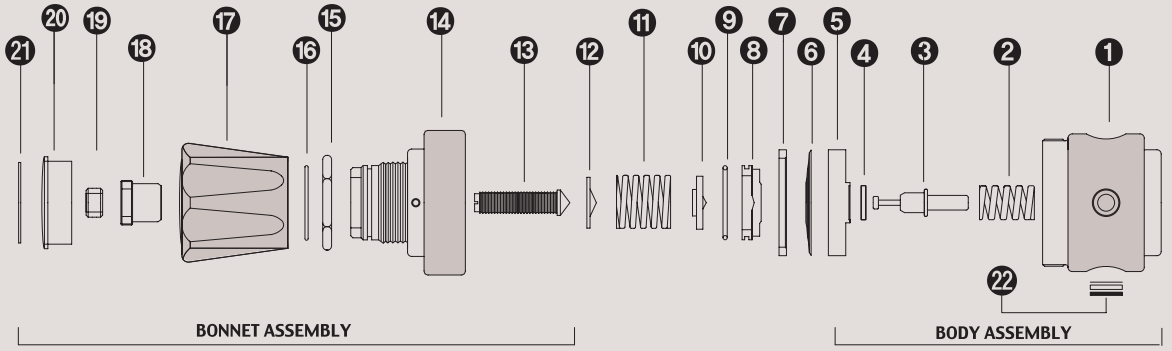

STANDARD MODEL SERIES

Item No.	Description	Part No.	Model Application
01	Body	092-02-01	02-01 Stainless steel 316L
02	Valve spring	092-04-01	All Model Same
03	Main Valve	092-06-01	All Model Same
04	Valve Seat	092-10-01	All Model Same
05	Locking Plate	092-14-01	All Model Same
06	Diaphragm	092-16-01	16-01 STS 316L / 16-02 Hastelloy C-22
07	Diaphragm Plate	092-22-01	All Model Same
08	Back-up Plate	092-26-01	All Model Same
09	Back-up Plate O-ring	092-26-00	All Model Same
10	Spring Plate	092-30-01	All Model Same
11	Load Spring	092-38-01	38-01 25psi/38-02 50psi/38-03 100psi/38-04 200psi/38-06 350psi/38-07 500psi
12	Pivot	092-40-01	All Model Same
13	Adjusting Screw	092-42-01	All Model Same
14	Bonnet	092-44-02	44-01 STS 316L / 44-02 Brass
15	Panel mount Nut	092-48-01	All Model Same
16	Push & Lock O-Ring	092-46-01	All Model Same
17	Control Knob	092-50-01	50-01 ABS / 50-04 Aluminum Control knob
18	Push & Lock Handle nut	092-52-01	All Model Same
19	Locking Nut	092-54-01	All Model Same
20	Name Cap	092-56-01	All Model Same
21	Name Cap Plate	092-58-01	58-01 25psi/58-02 50psi/58-03 100psi/58-04 200psi/58-06 350psi/58-07 500psi
22	Filter Assembly	092-60-03	All Model Same